Worldwide Locations

U.S.A
Sumitomo Machinery Corporation of America (SMA)
4200 Holland Blvd. Chesapeake,VA 23323,U.S.A.
TEL (1)757-485-3355 FAX (1)757-485-7490

Canada
SM Cyclo of Canada, Ltd. (SMC)
1453 Cornwall Road,Oakville, Canada ON L6J 7T5
TEL (1)905-469-1050 FAX (1)905-469-1055

Mexico
SM Cyclo de Mexico, S.A. de C.V. (SMME)
Av. Desarrollo 541, Col. Finsa, Guadalupe,
Nuevo León, México, CP67132
TEL (52)81-8144-5130 FAX (52)81-8144-5130

Brazil
Sumitomo Industrias Pesadas do Brasil Ltda. (SHIB)
Rodovia do Acucar (SP-075) Km 26
Itu, Sao Paulo, Brasil
TEL (55)11-4886-1000 FAX (55)11-4886-1000

Chile
SM Cyclo de Chile, Ltda. (SMCH)
San Pablo 3507, Quinta Normal, Santiago, Chile
TEL (56)2-892-7000 FAX (56)2-892-7001

Argentina
SM Cyclo de Argentina S.A. (SMAR)
Ing. Delpini, 2236Area de Promocion el Triangulo,
Partido Malvinas Argentinas Grand Bourg,
Buenos Aires, Argentina B1615KGB
TEL (54)3327-45-4095 FAX (54)3327-45-4099

Guatemala
SM Cyclo de Guatemala Ensambladora, Ltda. (SMGT)
Parque Industrial Unisur, 0 Calle B 19-50 Zona 3,
Bodega D-1 Delta Bárcenas en Villa Nueva, Guatemala
TEL (502)6648-0500 FAX (502)6631-9171

Colombia
SM Cyclo Colombia, S.A.S.
Carrera 11, No.93A-53, Office 203, Bogotá, Colombia
TEL (57)1-3000673

Germany
Sumitomo (SHI) Cyclo Drive Germany GmbH (SCG)
Cyclostraße 92, 85229 Markt Indersdorf, Germany
TEL (49)8136-66-0 FAX (49)8136-5771

Austria
Sumitomo (SHI) Cyclo Drive Germany GmbH (SCG)
SCG Branch Austria Office
Gruentalerstraße 30A, 4020 Linz, Austria
TEL (43)732-330958 FAX (43)732-331978

Belgium
Belgium, Netherlands, Luxemburg
Hansen Industrial Transmissions NV
Leonardo da Vincilaan 1-3
2650 Edegem, Belgium
TEL (32)3-450-12-11

France
SM-Cyclo France SAS (SMFR)
8 Avenue Christian Doppler, 77700 Serris, France
TEL (33)164171717 FAX (33)164171718

Italy
SM-Cyclo Italy Srl (SMIT)
Via dell' Artigianato 23, 20010 Cornaredo (MI), Italy
TEL (39)293-481101 FAX (39)293-481103

Spain
SM-Cyclo Iberia, S.L.U.
C/Gran Via n° 63 bis
planta primera, oficina 1B
48011 Bilbao - Vizcaya, Spain
TEL (34)944-805389

United Kingdom
SM-Cyclo UK Ltd. (SMUK)
Unit 29, Bergen Way, Sutton Fields Industrial Estate,
Kingston upon Hull, HU7 0YQ, East Yorkshire,
United Kingdom
TEL (44)1482-790340 FAX (44)1482-790321

Turkey
SM Cyclo Turkey Güç Aktarım Sis. Tic. Ltd. Sti. (SMTR)
Büyükdere Çayırbaşı Cd. Dede Yusuf Sk. No:11,
34453 Sarıyer Istanbul, Turkey
TEL (90)216-384-4482 FAX (90)216-384-4482

China
Sumitomo (SHI) Cyclo Drive China, Ltd. (SCT)
11F,SMEG Plaza, No.1386 Hongqiao Road,
Changning District, Shanghai, China (P.C.200336)
TEL (86)21-3462-7877 FAX (86)21-3462-7922

Hong Kong
SM-Cyclo of Hong Kong Co.,Ltd. (SMHK)
Rm 1301, CEO Tower, 77 Wing Hong Street,
Cheung Sha Wan, Kowloon, Hong Kong
TEL (852)2460-1881 FAX (852)2460-1882

Korea
Sumitomo (SHI) Cyclo Drive Korea, Ltd. (SCK)
Royal Bldg. 9F Rm.913, 5 Danju-Dong, Chongro-Ku,
Seoul, Korea 110-721
TEL (82)2-730-0151 FAX (82)2-730-0156

Taiwan
Tatung SM-Cyclo Co., Ltd. (TSC)
22 Chungshan N. Road 3rd., Sec. Taipei, Taiwan 104,
R.O.C.
TEL (886)2-2595-7275 FAX (886)2-2595-5594

Singapore
Sumitomo (SHI) Cyclo Drive Asia Pacific Pte. Ltd. (SCA)
83 Joo Koon Circle, Singapore 629109
TEL (65)6591-7800 FAX (65)6863-4238

Philippines
Sumitomo (SHI) Cyclo Drive Asia Pacific Pte. Ltd. (SMPH)
C4 & C5 Bldg. Granville Industrial Complex
Governor's Drive, Bo. Bancal,
Carmona, Cavite 4116
Philippines
TEL (63)2-584-4921 FAX (63)2-584-4922
TEL (63)46-430-3591
TEL (63)46-482-0580
TEL (63)46-482-0581

Vietnam
SM-Cyclo (Vietnam) Co., Ltd. (SMVN)
Factory 2B, Lot K1-2-5,Road No.: 2-3-5A,
Le Minh Xuan Industrial Park, Binh Chanh Dist.,
HCMC, Vietnam.
TEL (84)8-37-663-709 FAX (84)8-37-663-710

Malaysia
SM-Cyclo of Malaysia Sdn. Bhd. (SMMA)
No.7C, Jalan Anggerik Mokara 31/56, Kota Kemuning,
Seksyen 31, 40460 Shah Alam, Selangor D.E., Malaysia
TEL (60)3-51210455 FAX (60)3-51210578

Indonesia
PT. SM-Cyclo Indonesia (SMID)
Cikarang Jalan Sungkai Blok F 25 No.09 K,
Delta Silicon III, Lippo Cikarang, Bekasi, Indonesia
TEL (62)21-2961-2100 FAX (62)21-2961-2211

Thailand
SM-Cyclo (Thailand) Co., Ltd. (SMTH)
195 Empire Tower, 21st Fl., Unit 2103-4, South Sathorn Rd.,
Yannawa Sathorn, Bangkok 10120, Thailand
TEL (66)2-670-0998 FAX (66)2-670-0999

Australia
Sumitomo (SHI) Hansen Australia Pty. Ltd. (SHAU)
181 Power Street Glendenning NSW 2761, Australia
TEL (61)2-9208-3000 FAX (61)2-9208-3050

India
Sumi-Cyclo Drive India Pvt. Ltd. (SMIN)
Survey No.130, Hissa No.02, Jeevan Nagar, Off Mumbai-Bangalore bypass, Tathawade, Pune-411 033, India
TEL (91)20-6674-2900 FAX (91)20-6674-2901

Japan
Sumitomo Heavy Industries, Ltd.
ThinkPark Tower, 1-1 Osaki 2-chome, Shinagawa-ku,
Tokyo 141-6025, Japan
TEL (81)3-6737-2511 FAX (81)3-6866-5160

Specifications, dimensions, and other items are subject to change without prior notice.

No.AP/BBB/01.01/2024.XX

Sumitomo Drive Technologies

BEVEL BUDDYBOX® 4000 Series

Sumitomo Drive Technologies

Bevel BUDDYBOX®
CYCLO® Right Angle Type
BEVEL BUDDYBOX® 4 Series

Sumitomo Heavy Industries, Ltd.

No.AP/BBB/01.01/2024.XX

BBB4 Cover.indd 1
07-Aug-18 1:15:26 PM

Lineup of Sumitomo'sRight Angle Series

A high-function and compact design Right angle gearmotor is available by selecting a mounting position and direction of your choice.

15W

HYPONIC GEARMOTOR®

More compact right angle gearmotors.

- Capacity 15W~11kW
- Ratio 1/5-1/1440

HYPONIC GEARMOTOR® is a product of Sumitomo Heavy Industries Gearmotors Co., Ltd.

1.5kW

BEVEL BUDDYBOX® 5Series

Lineup dedicated to shaft mount series for small size range.

- Capacity 0.1kW-55kW
- Ratio 1/11-1/7228

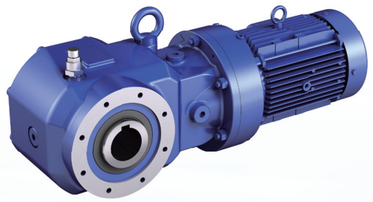

BEVEL BUDDYBOX® 4Series

Right angle gearmotors equipped with a bevel gear added to the output stage by making use of superior characteristics of Cyclo® Reducer.

- Capacity 0.1kW~55kW
- Ratio 1/11-1/10658

55kW

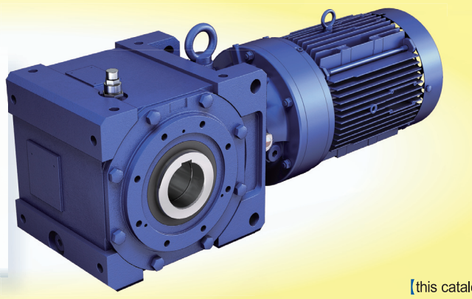

[this catalog]

PARAMAX®

Compact gearmotor type structure implementable by use of high mechanical strength, high-function right angle helical bevel reducer.

- Torque 2.6~552kN·m
- Ratio 1/6.3-1/450

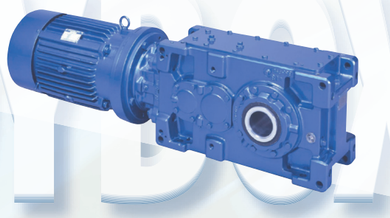

3000kW

A1

BBB4 Cover.indd 2

07-Aug-18 1:15:35 PM

Table of Contents

A Overview of Bevel BUDDYBOX®

Sumitomo's Right Angle Gearmotor Series
Contents
Features
List of Models and Specifications / Application Products
Product Range of Reducers
Product Range of Motors

B Gearmotors B1

Motor Variations B2
About Inverter Drive B3
1. About Selection B5
2. Selection Table B25
1) Three Phase Motor B29
2) AF Motor B111
3. Dimensional Drawings B127
1) Shaft or Case Mount Types B129
2) Flange Type B165
3) Foot Mount Type B201

C Reducers C1

1. About Selection C3
2. Selection Table C13
1) Reduction Ratio: 11~305 C14
2) Reduction Ratio: 364~10658 C118
3. Dimensional Drawings C131
1) Shaft or Case Mount Types C132
2) Flange Type C136
3) Foot Mount Type C140

D Options D1

1. Reducer Section
Provisions for Ambient Conditions D2
Outdoor Type, Dustproof Type, Anticorrosion Specification, and Low/High Temperature Specification, and Others
Installation Options D4
Shrink Disk Specification, Taper-Grip Specification, Torque Arm, and Ceiling/Wall Mount Type
Lubrication Options D13
Oil Gauge Options
2. Motor Section
Provisions for Ambient Conditions D14
Outdoor Motors, Dustproof Motors, Explosion Proof Motors, Anticorrosion Motors, and Water Proof Motors, Thermal Classes, and Others
Provisions for Different Operation Conditions D20
Motors With encoder
Terminal Box Options D21
Terminal Box Repositioning, Material/Type Change, and with Terminal
Brake option D22
With Special Brake Torque, Quick Braking Connection Option, and Loose Device
Provisions for Overseas Specifications D24
3. Common
Coating and Rust Prevention Options D43

E Technical Data E1

1. Reducer Section E3
2. Motor Section E31
3. Common E71

F Other Data F1

Product Lineup F2
Warranty Standard F4
Safety Precautions F5

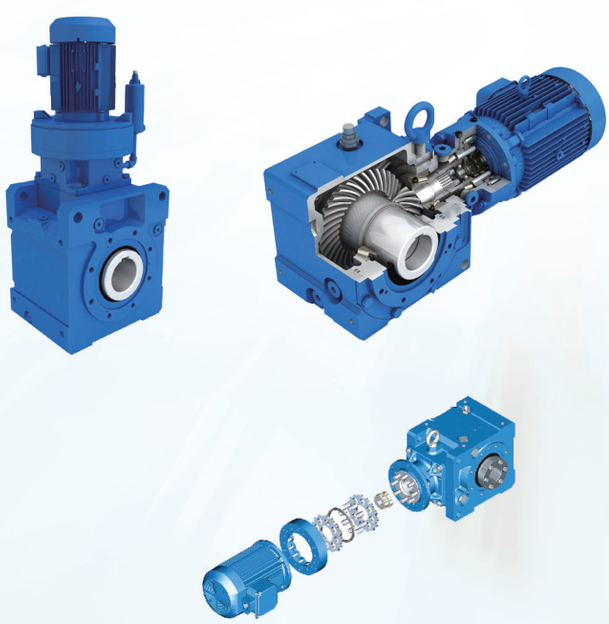

Bevel BUDDYBOX® Reducers & Gearmotor

Flexible configurations

- Shaft Options:
  - Keyed Hollow
  - Shrink Disc
  - Solid Shaft
  - Keyless Taper
  - Grip® Bushing
- Mounting Options:
  - Flange
  - Foot
  - Shaft
  - Universal Housing

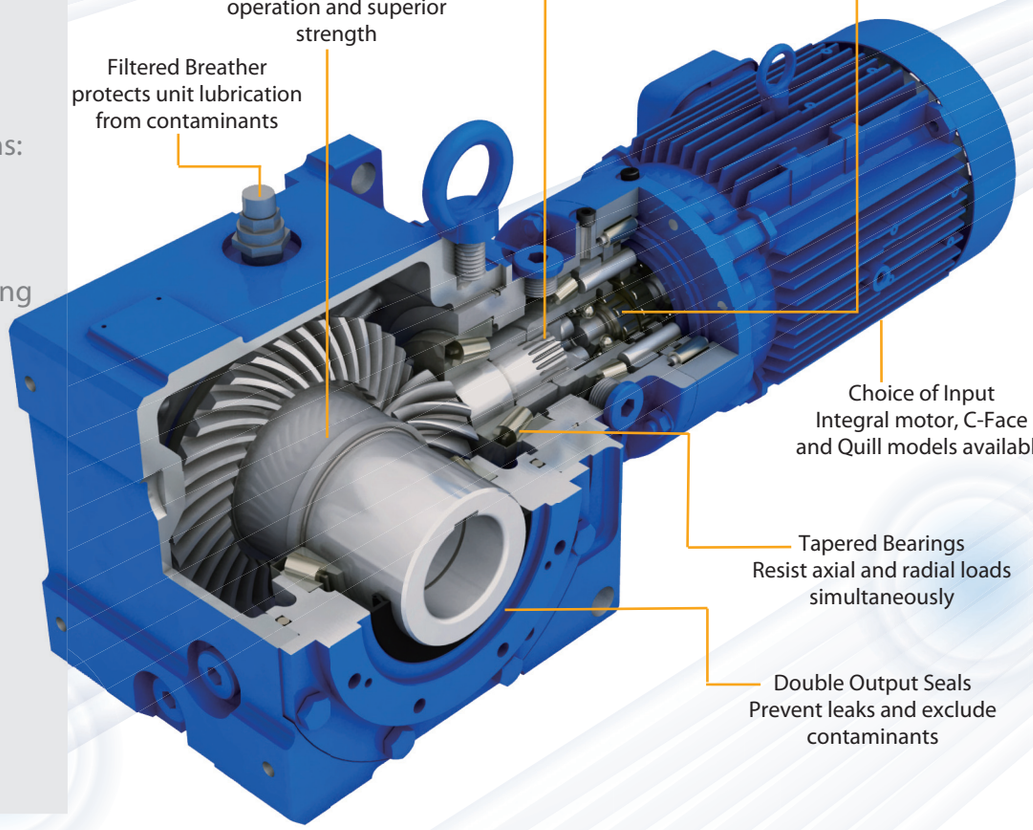

Compact but high radial load

More compact than a typical right angle shaft gearmotors in the same class. Also, the allowable radial load is significantly increased by use of an FCD housing.

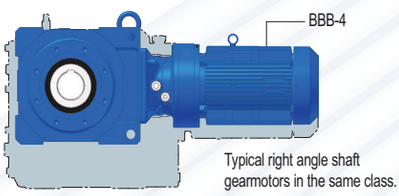

Long life and excellent shock resistance

The input stage uses our Cyclo® speed reducer or planetary gear which allows a greater shock resistance than helical gears and provides a longer operating life.

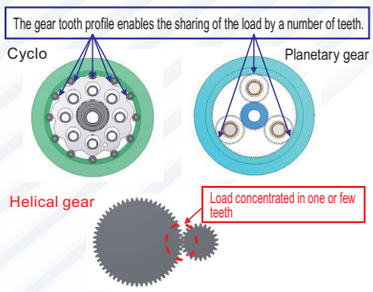

Single lubrication chamber

Simple, Single Reservoir Oil Lubrication for Easy Maintenance and Higher Performance

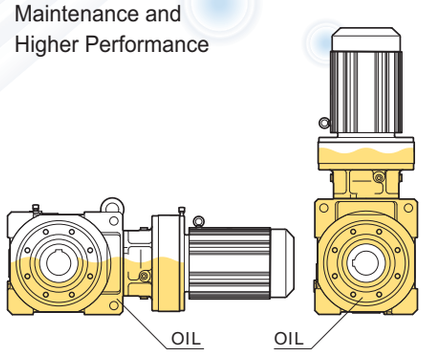

Wide Variety of Application Products and Options

Product Description

The Cyclo® Bevel Buddy Box 4 (Cyclo® BBB4) built by Sumitomo is a robust, state of the art mid-sized family of speed reducers and gearmotors. Building on more than 75 years of successful Cyclo® experience in virtually every application and industry, the result is an extremely compact, efficient and reliable unit in a very power-dense package. The Cyclo® BBB4 has a unique combination of features that results in a highly reliable, efficient and durable gearbox. The all-steel internal construction, in conjunction with the Cyclo® or planetary gear inputs, and ductile iron housing provide unmatched ruggedness.

In addition, the full array of input accessories and output mounting styles provides an amazing ability to customize the product to fit nearly any requirement. These options include solid shaft, hollow bore, shrink disc, free input shaft, integral motor, and C-Face adapter.

Features & Benefits

- 100% Hardened Steel Rotating Components
  - ~ Provide high efficiency, long life and exceptional reliability
- Cycloidal or Planetary Input
  - ~Unmatched capability to handle overloads
- Double Output Seals
  - ~Four seal lips on every unit virtually eliminates the possibility of leaks
- Dimensionally Interchangeable with proceding BBB-3 series
  - ~ Simple, economical retrofits
- Patented Taper-Grip® Bushing
  - ~ Simple, keyless shaft mounting

Specifications Summary

Ratios:	11:1 to 26,000:1 and greater
Torque Capacity:	17,400N•m
Motor Power:	0.1kW ~ 55kW
Mounting:	Keyed Hollow Shaft, Keyless TaperGrip® Bush, Foot, Flange, Face, Shrink Disc
Options:	Integral Gearmotor, Hollow Input, J-adaptor, Shrik Disc
Motor Standards:	IEC, CE, CCC, JIS, NEMA, UL, CSA, GOST-R, etc

▸ Popular Input and Output Options

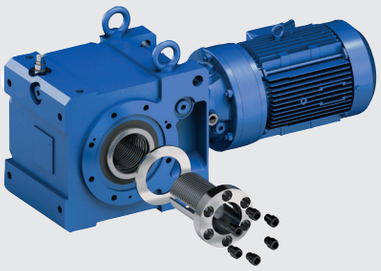

Taper-Grip® Bushing
Metric and Inch

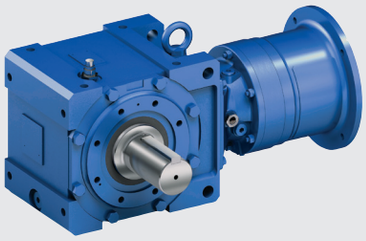

Solid Output Shaft
Metric and Inch

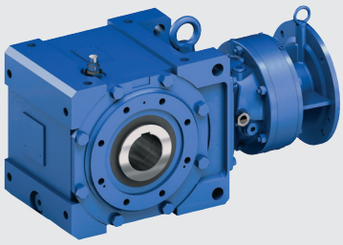

Keyed Hollow Bore
Metric and Inch

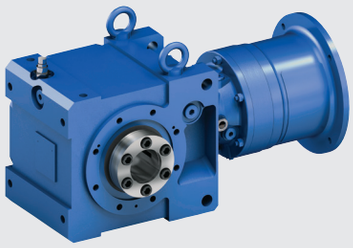

Shrink Disc
Standard Metric Sizes

High Efficiency Motor available

IE2 high efficiency motors according to IEC60034-30 is available.
We also manufacture high efficiency motor standards of many other countries.

Easy maintenance

This construction uses the Cyclo® speed reducer for easy disassembly and repair, allowing for better serviceability.
This also makes service support at your local service center possible.

Worldwide availability

BBB4 reducers and gearmotors can be manufactured according to optimum specifications in the country and region of use.
With our global network, maintenance and a replacement can be supported locally.

Quick Reference Guide

Standard Specifications

Gearmotors

	Three Phase Motors	AF Motors (V/f control; for constant torque inverter drive)	High-Efficiency Motor
	Selection table: B29	Selection table: B111	Selection table: B27
Shaft or Case Mount L□YM L□UM 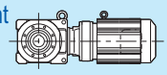	Dimensional drawing: B129	Dimensional drawing: B129	Dimensional drawing: B129
Flange L□FM 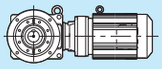	Dimensional drawing: B165	Dimensional drawing: B165	Dimensional drawing: B165
Foot Mount L□HM 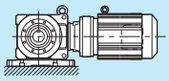	Dimensional drawing: B201	Dimensional drawing: B201	Dimensional drawing: B201

Reducer Type

	Selection table: C13
Shaft or Case Mount L□Y L□U 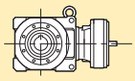	Dimensional drawing: C132
Flange L□F 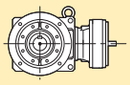	Dimensional drawing: C136
Foot Mount L□H 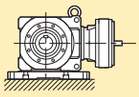	Dimensional drawing: C140

Forinverter drive use

If the gearmotor is being used with inverter drive, it can be used separately by either sensorless vector or V/f control.*(Refer to Page B3-B4)

■If the gearmotor is being used with sensorless vector control:

If Sumitomo's HF-320α · HF-430 Series sensorless vector control inverter is being used:

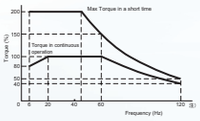

Three phase motor

(If a Sumitomo-made inverter SF-420 is being used, consult us.)

■If the gearmotor is being used with V/f control:

If a general-purpose inverter is being used:

[1] If it is being used with 60Hz or less in constant torque operation mode:

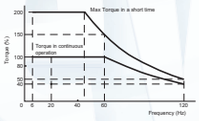

AF motor

[2] If it is being used with 60Hz or less in reduced torque operation mode:

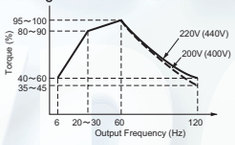

Three phase motor

* The above graph is an example.

Revised A001_013.indd 5 13-Jun-18 12:44:09 PM

Optional Specifications

Ambient Conditions

Outdoor — Reducer Section··· D2~3
Motor Section··· D14
Dustproof (light, heavy) — Reducer Section··· D2~3
Motor Section··· D15
Explosion proof — Motor Section··· D16~17
Anticorrosion — Reducer Section··· D2~3
Motor Section··· D18
Low/high temperature — Reducer Section··· D2~3
Motor Section··· D19
High Humidity — Reducer Section··· D2~3
Motor Section··· D19
Altitude — Reducer Section··· D2~3
Motor Section··· D19
Thermal class — Motor Section··· D19
Water proof — Motor Section··· D19

Installation

Output shaft shrink disk spec — Reducer Section··· D4
Output shaft taper grip spec — Reducer Section··· D6
Torque arm — Reducer Section··· D8
Wall and ceiling — Reducer Section··· D10

Lubrication

Oil gauge special — Reducer Section··· D13

Operation Conditions

With encoder — Motor Section··· D20

Terminal Box

Repositioning — Motor Section··· D21
Terminal box material — Motor Section··· D21
With terminal block — Motor Section··· D21

Brake

Brake torque special — Motor Section··· D22
Quick braking — Motor Section··· D22
With loose device — Motor Section··· D23

Overseas Specifications

Motor Section··· D24~42

Coating

Common ··· D43

Application Products

With Torque Limiter

Prevents valued machines from overload.

* Consult us for product details.

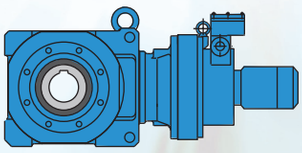

Input Hollow Type

Available for a wide range of servo and IEC flange motors.

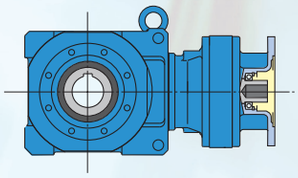

Refer to page 125 to 142 for dimensions table.

Relevant Products

Helical BUDDYBOX®

A Cyclo® reducer integrated with a hollow shaft type parallel shaft gear box.
Compatible with various specifications.

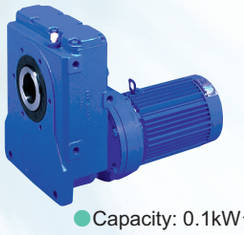

- Capacity: 0.1kW∼30kW
- Reduction ratio: 11∼4365

* Consult us for product details.

Product Range: Standard Motor and Reducer Combinations

■ Table 1 & 2 gives a quick overview of Power-Ratio-Speed for BBB-4

Table 1: Reduction Ratios 11 – 417

Nominal Ratio	11	13	14	16	18	19	21	22	25	26	28	35	39	42	46	48	53	54	60
Output Speed (50Hz)	138.1	113.3	103.6	90.7	82.9	75.6	69.1	64.8	59.2	56.7	51.8	41.2	37.7	34.9	31.9	30.3	27.7	26.7	24.4
Output Speed (60Hz)	166.7	136.8	125	109.4	100	91.2	83.4	78.2	71.5	68.4	62.5	49.8	45.5	42.1	38.5	36.5	33.4	32.2	29.5
Motor Power																			
0.1 x 4P																			
0.2 x 4P																			
0.25 x 4P																			
0.4 x 4P																			
0.55 x 4P																			
0.75 x 4P	○	○	○	○	○	○	○	○	○	○	○	○	○	○	○	○	○	○	●
1.1 x 4P	●	●	●	●	●	○	●	○	○	○	●	●	●	○	●	○	●	○	●
1.5 x 4P	●	●	●	●	●	○	●	○	○	○	●	●	●	○	●	○	●	○	●
2.2 x 4P	●	●	●	●	●	○	●	●	●	○	●	●	●	○	●	○	●	○	●
3 x 4P	●	●	●	●	●	○	●	●	●	○	●	●	●	○	●	○	●	○	●
3.7 x 4P	●	●	●	●	●	○	●	○	●	○	●	●	●	○	●	○	●	○	●
5.5 x 4P	●	●	●	●	●	○	●	○	●	○	●	●	●	○	●	○	●	○	●
7.5 x 4P	●	●	●	●	●	○	●	●	●	○	●	●	●	○	●	○	●	○	●
11 x 4P	●	●	●	●	●	○	●	●	●	○	●	●	●	○	●	○	●	○	●
15 x 4P	●	●	●	●	●	○	●	●	●	○	●	●	●	○	●	○	●	○	●
18.5 x 4P	●	●	●	●	●	○	●	●	●	○	●	●	●	○	●	○	●	○	●
22 x 4P	●	●	●	●	●	○	●	●	●	○	●	●	●	○	●	○	●	○	●
30 x 4P	●	●	●	●	●	○	●	●	●	○	●	●	●	○	●	○	●	○	●
37 x 4P	●	●	●	●	●	○	●	●	●	○	●	●	●	○	●	○	●	○	●
45 x 4P	●	●	●	●	●	○	●	●	●	○	●	●	●	○	●	○	●	○	●
55 x 4P	●	●	●	●	●	○	●	●	●	○	●	●	●	○	●	○	●	○	●

● Selection data table available in the selection tables of this catalogue.
O Selection data not available in the catalogue at the time of printing. Please consult Sumitomo representative for selection and technical details.

Table 2: Reduction Ratio: 364-10658

● : Product Range of Bevel BUDDYBOX ○: Available option

Nominal ratio	364	424	501	578	683	809	956	1117	1320	1656	1957	2272
Output Speed (50Hz)	3.99	3.43	2.9	2.52	2.13	1.8	1.52	1.3	1.1	0.88	0.75	0.64
Output Speed (60Hz)	4.81	4.14	3.5	3.04	2.57	2.17	1.84	1.57	1.33	1.06	0.9	0.78
Motor Power												
0.1 X 4P	○	○	○	○	●	●	●	●	●	●	●	●
0.2 X 4P	●	●	●	●	●	●	●	●	●	●	●	●
0.25 X 4P	○	●	●	●	●	●	●	●	●	●	●	●
0.4 X 4P	●	●	●	●	●	●	●	●	●	●	●	●
0.55 X 4P	●	●	●	●	●	●	●	●	●	●	●	●
0.75 X 4P	●	●	●	●	●	●	●	●	●	●	●	●
1.1 X 4P	●	●	●	●	●	●	●	●	●	●	●	●
1.5 X 4P	●	●	●	●	●	●	●	●	●	●	●	●
2.2 X 4P	●	●	●	●	●	●	●	●	●	●		
3 X 4P	●	●	●	●	●	●	●	●				
3.7 X 4P	●	●	●	●	●	●	●					
5.5 X 4P	●	●	●	●								
7.5 X 4P	●	●	●									
11 X 4P												
15 X 4P												
18.5 X 4P												
22 X 4P												
30 X 4P												
37 X 4P												
45 X 4P												
55 X 4P												

● Selection data table available in the selection tables of this catalogue.
O Selection data not available in the catalogue at the time of printing. Please consult Sumitomo representative for selection and technical details.

67	74	80	88	93	102	112	123	138	151	163	179	189	207	227	249	278	305	417	Nominal Ratio	
21.6	19.8	18.2	16.6	15.7	14.3	13	11.9	10.6	9.7	8.9	8.2	7.7	7.1	6.4	5.9	5.3	4.8	3.5	Output Speed (50Hz)	
26.1	23.9	21.9	20	18.9	17.3	15.7	14.3	12.8	11.7	10.8	9.9	9.3	8.5	7.8	7.1	6.3	5.8	4.3	Output Speed (60Hz)	
																			0.1 x 4P	Motor Power
											●	○	●	○	●	○	●	●	0.2 x 4P	
											●	○	●	○	●	○	●	●	0.25 x 4P	
						●	●	○	●	○	●	○	●	○	●	○	●		0.4 x 4P	
		●	●	○	●	●	●	○	●	○	●	○	●	○	●	○	●		0.55 x 4P	
●	●	●	●	○	●	●	●	○	●	○	●	○	●	○	●	○	●		0.75 x 4P	
●	●	●	●	○	●	●	●	○	●	○	●	○	●	○	●	○	●		1.1 x 4P	
●	●	●	●	○	●	●	●	○	●	○	●	○	●	○	●	○	●		1.5 x 4P	
●	●	●	●	○	●	●	●	○	●	○	●	○	●	○	●	○	●		2.2 x 4P	
●	●	●	●	○	●	●	●	○	●	○	●	○	●	○	●	○	●		3 x 4P	
●	●	●	●	○	●	●	●	○	●	○	●	○	●	○	●	○	●		3.7 x 4P	
●	●	●	●	○	●	●	●	○	●	○	●	○	●	○	●	○	●		5.5 x 4P	
●	●	●	●	○	●	●	●	○	●	○	●	○	●	○	●	○	●		7.5 x 4P	
●	●	●	●	○	●	●	●	○	●	○	●	○	●	○	●	○	●		11 x 4P	
●	●	●	●	○	●	●	●	○	●	○	●	○	●						15 x 4P	
●	●	●	●	○	●	●	●	○	●	○	●								18.5 x 4P	
●	●	●	●	○	●	●	●	○	●										22 x 4P	
●	●	●	●	○	●	●													30 x 4P	
●	●	●	●																37 x 4P	
●	●	●																	45 x 4P	
●																			55 x 4P	

2559	2944	3511	4365	5177	6472	7228	8880	10658	Nominal ratio	
0.57	0.5	0.42	0.34	0.29	0.23	0.21	0.17	0.14	Output Speed (50Hz)	
0.69	0.6	0.5	0.41	0.34	0.28	0.25	0.2	0.17	Output Speed (60Hz)	
●	●	●	●	●	○	●	○	●	0.1 X 4P	Motor Power
●	●	●	●	●	○	●	○	●	0.2 X 4P	
●	●	●	●	●	○	●	○	●	0.25 X 4P	
●	●	●	●	●	○	●	○	●	0.4 X 4P	
●	●	●	●	●					0.55 X 4P	
●	●	●	●						0.75 X 4P	
●	●								1.1 X 4P	
									1.5 X 4P	
									2.2 X 4P	
									3 X 4P	
									3.7 X 4P	
									5.5 X 4P	
									7.5 X 4P	
									11 X 4P	
									15 X 4P	
									18.5 X 4P	
									22 X 4P	
									30 X 4P	
									37 X 4P	
									45 X 4P	
									55 X 4P	

Notes:
1. Calculation of output speed is based on the following input speeds.
   50Hz: 1450 r/min
   60Hz: 1750 r/min
2. Combination in these tables are guide only. Refer to selection tables for gearmotors (page xxx to page xxx) or reducers (page xxx to page xxx) for details.
3. Reduction ratios shown above are nominal ratios and output speeds are based on these ratios. Refer to pages 9 and 10 for actual reduction ratio.
4. ▭ Refer to Sumitomo Hydronic® Neo as alternative product for these range.
5. ▬ Refer to Sumitomo Paramax® as alternative product for these range.

Frame Size and Actual Reduction Ratios

Table 3: Frame Sizes

Bevel Single + Cyclo Single or Planetary Gear Single Reduction Type						Bevel Single + Cyclo Double Reduction Type					
4A100	4B120	4C140	4D160	4E170	4F180	4A10DA	4B12DA	4C14DA	4D16DA	4E17DA	4F18DA
4A105	4B125	4C145	4D165	4E175	4F185	4A12DA	4B12DB	4C14DB	4D16DB	4E17DB	4F18DB
4A110	4B140	4C160	4D170	4E180	4F190	4A12DB	4B14DA	4C14DC	4D17DA	4E17DC	4F19DA
4A115	4B145	4C165	4D175	4E185	4F195		4B14DB	4C16DA	4D17DB	4E18DA	4F19DB
4A120	4B160	4C170	4D180	4E190				4C16DB	4D17DC	4E18DB	
4A125	4B165	4C175	4D185	4E195					4D18DA	4E19DA	
4A140									4D18DB	4E19DB	
4A145											

Table 4: Bevel Single + Planetary Gear Single (Reduction Ratio: 11~18)

Nominal Ratio	Frame Size	4A10□	4A12□	4A14□ 4B14□	4B16□ 4C16□	4C17□ 4D17□	4D18□ 4E18□	4E19□ 4F19□
11	Actual Ratio	10.50	10.50	10.89	10.85	10.86	10.50	10.82
	Output Stage (Bevel)	3.5	3.5	3.5	3.5	3.5	3.5	3.5
	Input Stage (Planetary Gear)	3.000	3.000	3.110	3.100	3.103	3.000	3.091
13	Actual Ratio	12.99	12.80	12.95	12.80	13.09	13.09	13.01
	Output Stage (Bevel)	3.2	3.2	3.2	3.2	3.2	3.2	3.2
	Input Stage (Planetary Gear)	4.059	4.000	4.047	4.000	4.091	4.091	4.067
14	Actual Ratio	14.21	14.00	14.16	14.00	14.32	14.32	14.23
	Output Stage (Bevel)	3.5	3.5	3.5	3.5	3.5	3.5	3.5
	Input Stage (Planetary Gear)	4.059	4.000	4.047	4.000	4.091	4.091	4.067
16	Actual Ratio	15.36	15.65	16.00	16.26	16.17	15.63	15.47
	Output Stage (Bevel)	3.2	3.2	3.2	3.2	3.2	3.2	3.2
	Input Stage (Planetary Gear)	4.800	4.890	5.000	5.080	5.053	4.886	4.833
18	Actual Ratio	16.80	17.12	17.50	17.78	17.68	17.10	16.92
	Output Stage (Bevel)	3.5	3.5	3.5	3.5	3.5	3.5	3.5
	Input Stage (Planetary Gear)	4.800	4.890	5.000	5.080	5.053	4.886	4.833

Table 5: Bevel Single + Cyclo Reducer Single (Reduction Ratio: 19~305)

Nominal Ratio	19	21	22	25	26	28	35	39	42	46	48
Actual Ratio	19.2	21.0	22.4	24.5	25.6	28.0	35.2	38.5	41.6	45.5	48.0
Output Stage (Bevel)	3.2	3.5	3.2	3.5	3.2	3.5	3.2	3.5	3.2	3.5	3.2
Input Stage (Cyclo)	6	6	7	7	8	8	11	11	13	13	15

Nominal Ratio	53	54	60	67	74	80	88	93	102	112	123
Actual Ratio	52.5	54.4	59.5	67.2	73.5	80.0	87.5	92.8	101.5	112.0	122.5
Output Stage (Bevel)	3.5	3.2	3.5	3.2	3.5	3.2	3.5	3.2	3.5	3.2	3.5
Input Stage (Cyclo)	15	17	17	21	21	25	25	29	29	35	35

Nominal Ratio	138	151	163	179	189	207	227	249	278	305
Actual Ratio	137.6	150.5	163.2	178.5	188.8	206.5	227.2	248.5	278.4	304.5
Output Stage (Bevel)	3.2	3.5	3.2	3.5	3.2	3.5	3.2	3.5	3.2	3.5
Input Stage (Cyclo)	43	43	51	51	59	59	71	71	87	87

Table 6: Bevel Single + Cyclo Reducer Double (Reduction Ratio: 364~10658)

Nominal Ratio	364	424	501	578	683	809	956	1117	1320	1656	1957
Actual Ratio	364.0	423.5	500.5	577.5	682.5	808.5	955.5	1116.5	1319.5	1655.5	1956.5
Output Stage	3.5	3.5	3.5	3.5	3.5	3.5	3.5	3.5	3.5	3.5	3.5
Input Stage (Cyclo) (Intermediate Part × Input Part)	104 (13×8)	121 (11×11)	143 (13×11)	165 (15×11)	195 (15×13)	231 (21×11)	273 (21×13)	319 (29×11)	377 (29×13)	473 (43×11)	559 (43×13)

Nominal Ratio	2272	2559	2944	3511	4365	5177	6472	7228	8880	10658
Actual Ratio	2271.5	2558.5	2943.5	3510.5	4364.5	5176.5	6471.5	7227.5	8879.5	10657.5
Output Stage	3.5	3.5	3.5	3.5	3.5	3.5	3.5	3.5	3.5	3.5
Input Stage (Cyclo) (Intermediate Part × Input Part)	649 (59×11)	731 (43×17)	841 (29×29)	1003 (59×17)	1247 (43×29)	1479 (87×17)	1849 (43×43)	2065 (59×35)	2537 (59×43)	3045 (87×35)

Notes: 1. Consult us for the other available reduction ratios.
2. Some ratios may not be available for certain frame sizes, consult us.

Frame Size and Actual Reduction Ratios

Table 7: Other available reduction ratios.

Nominal Ratio	387	403	420	435	441	458	476	525	528	538	541	557	588	598
Actual Ratio	387.2	403.2	420.0	435.2	441.0	457.6	476.0	525.0	528.0	537.6	540.8	556.8	588.0	598.4
Output Stage (Bevel)	3.2	3.2	3.5	3.2	3.5	3.2	3.5	3.5	3.2	3.2	3.2	3.2	3.5	3.2
Input Stage (Cyclo)	121	126	120	136	126	143	136	150	165	168	169	174	168	187
(Intermediate Part×Input Part)	(11×11)	(21×6)	(15×8)	(17×8)	(21×6)	(13×11)	(17×8)	(25×6)	(15×11)	(21×8)	(13×13)	(29×6)	(21×8)	(17×11)

Nominal Ratio	609	624	640	655	672	707	720	739	774	788	812	816	826	874
Actual Ratio	609.0	624.0	640.0	654.5	672.0	707.2	720.0	739.2	773.5	787.5	812.0	816.0	825.6	873.6
Output Stage (Bevel)	3.5	3.2	3.2	3.5	3.2	3.2	3.2	3.2	3.5	3.5	3.5	3.2	3.2	3.2
Input Stage (Cyclo)	174	195	200	187	210	221	225	231	221	225	232	255	258	273
(Intermediate Part×Input Part)	(29×6)	(15×13)	(25×8)	(17×11)	(35×6)	(17×13)	(15×15)	(21×11)	(17×13)	(15×15)	(29×8)	(17×15)	(43×6)	(21×13)

Nominal Ratio	893	896	903	925	963	980	1008	1012	1021	1040	1071	1103	1138	1142
Actual Ratio	892.5	896.0	903.0	924.8	962.5	980.0	1008.0	1011.5	1020.8	1040.0	1071.0	1102.5	1137.5	1142.4
Output Stage (Bevel)	3.5	3.2	3.5	3.2	3.5	3.5	3.2	3.5	3.2	3.2	3.5	3.5	3.5	3.2
Input Stage (Cyclo)	255	280	258	289	275	280	315	289	319	325	306	315	325	357
(Intermediate Part×Input Part)	(17×15)	(35×8)	(43×6)	(17×17)	(25×11)	(35×8)	(21×15)	(17×17)	(29×11)	(25×13)	(51×6)	(21×15)	(25×13)	(21×17)

Nominal Ratio	1200	1204	1206	1232	1239	1250	1306	1313	1348	1360	1392	1411	1428	1456
Actual Ratio	1200.0	1204.0	1206.4	1232.0	1239.0	1249.5	1305.6	1312.5	1347.5	1360.0	1392.0	1411.2	1428.0	1456.0
Output Stage (Bevel)	3.2	3.5	3.2	3.2	3.5	3.5	3.2	3.5	3.5	3.2	3.2	3.2	3.5	3.2
Input Stage (Cyclo)	375	344	377	385	354	357	408	375	385	425	435	441	408	455
(Intermediate Part×Input Part)	(25×15)	(43×8)	(29×13)	(35×11)	(59×6)	(21×17)	(51×8)	(25×15)	(35×11)	(25×17)	(29×15)	(21×21)	(51×8)	(35×13)

Nominal Ratio	1488	1510	1514	1523	1544	1578	1593	1652	1670	1680	1726	1789	1795	1818
Actual Ratio	1487.5	1510.4	1513.6	1522.5	1543.5	1577.6	1592.5	1652.0	1670.4	1680.0	1725.5	1788.8	1795.2	1817.6
Output Stage (Bevel)	3.5	3.2	3.2	3.5	3.5	3.2	3.5	3.5	3.2	3.2	3.5	3.2	3.2	3.2
Input Stage (Cyclo)	425	472	473	435	441	493	455	472	522	525	493	559	561	568
(Intermediate Part×Input Part)	(25×17)	(59×8)	(43×11)	(29×15)	(21×21)	(29×17)	(35×13)	(59×8)	(87×6)	(35×15)	(29×17)	(43×13)	(51×11)	(71×8)

Nominal Ratio	1827	1838	1904	1949	1964	1988	2000	2064	2077	2083	2132	2188	2227	2258
Actual Ratio	1827.0	1837.5	1904.0	1948.8	1963.5	1988.0	2000.0	2064.0	2076.8	2082.5	2131.5	2187.5	2227.2	2257.5
Output Stage (Bevel)	3.5	3.5	3.2	3.2	3.5	3.5	3.2	3.2	3.2	3.5	3.5	3.5	3.2	3.5
Input Stage (Cyclo)	522	525	595	609	561	568	625	645	649	595	609	625	696	645
(Intermediate Part×Input Part)	(87×6)	(35×15)	(35×17)	(29×21)	(51×11)	(71×8)	(25×25)	(43×15)	(59×11)	(35×17)	(29×21)	(25×25)	(87×8)	(43×15)

Nominal Ratio	2320	2339	2352	2436	2448	2454	2499	2538	2573	2678	2685	2691	2734	2774
Actual Ratio	2320.0	2339.2	2352.0	2436.0	2448.0	2454.4	2499.2	2537.5	2572.5	2677.5	2684.5	2691.2	2733.5	2774.4
Output Stage (Bevel)	3.2	3.2	3.2	3.5	3.2	3.2	3.2	3.5	3.5	3.5	3.5	3.2	3.5	3.2
Input Stage (Cyclo)	725	731	735	696	765	767	781	725	735	765	767	841	781	867
(Intermediate Part×Input Part)	(29×25)	(43×17)	(35×21)	(87×8)	(51×15)	(59×13)	(71×11)	(29×25)	(35×21)	(51×15)	(59×13)	(29×29)	(71×11)	(51×17)

Nominal Ratio	2800	2832	2890	2954	3035	3062	3063	3098	3161	3210	3231	3248	3350	3408
Actual Ratio	2800.0	2832.0	2889.6	2953.6	3034.5	3062.4	3062.5	3097.5	3160.5	3209.6	3230.5	3248.0	3349.5	3408.0
Output Stage (Bevel)	3.2	3.2	3.2	3.2	3.5	3.2	3.5	3.5	3.5	3.2	3.5	3.2	3.5	3.2
Input Stage (Cyclo)	875	885	903	923	867	957	875	885	903	1003	923	1015	957	1065
(Intermediate Part×Input Part)	(35×25)	(59×15)	(43×21)	(71×13)	(51×17)	(87×11)	(35×25)	(59×15)	(43×21)	(59×17)	(71×13)	(35×29)	(87×11)	(71×15)

Nominal Ratio	3427	3440	3553	3619	3728	3749	3763	3862	3920	3965	3990	4080	4176	4225
Actual Ratio	3427.2	3440.0	3552.5	3619.2	3727.5	3748.5	3762.5	3862.4	3920.0	3964.8	3990.4	4080.0	4176.0	4224.5
Output Stage (Bevel)	3.2	3.2	3.5	3.2	3.5	3.5	3.5	3.2	3.2	3.2	3.2	3.2	3.2	3.5
Input Stage (Cyclo)	1071	1075	1015	1131	1065	1071	1075	1207	1225	1239	1247	1275	1305	1207
(Intermediate Part×Input Part)	(51×21)	(43×25)	(35×29)	(87×13)	(71×15)	(51×21)	(43×25)	(71×17)	(35×35)	(59×21)	(43×29)	(51×25)	(87×15)	(71×17)

Nominal Ratio	4288	4337	4463	4568	4720	4771	4816	5163	5219	5268	5475	5680	5712	5846
Actual Ratio	4287.5	4336.5	4462.5	4567.5	4720.0	4771.2	4816.0	5162.5	5218.5	5267.5	5475.2	5680.0	5712.0	5846.4
Output Stage (Bevel)	3.5	3.5	3.5	3.5	3.2	3.2	3.2	3.5	3.5	3.5	3.2	3.2	3.2	3.2
Input Stage (Cyclo)	1225	1239	1275	1305	1475	1491	1505	1475	1491	1505	1711	1775	1785	1827
(Intermediate Part×Input Part)	(35×35)	(59×21)	(51×25)	(87×15)	(59×25)	(71×21)	(43×35)	(59×25)	(71×21)	(43×35)	(59×29)	(71×25)	(51×35)	(87×21)

Nominal Ratio	5917	5989	6213	6248	6395	6589	6608	6960	7018	7207	7613	7676	7952	8074
Actual Ratio	5916.8	5988.5	6212.5	6247.5	6394.5	6588.8	6608.0	6960.0	7017.6	7206.5	7612.5	7675.5	7952.0	8073.6
Output Stage (Bevel)	3.2	3.5	3.5	3.5	3.5	3.2	3.2	3.2	3.2	3.5	3.5	3.5	3.2	3.2
Input Stage (Cyclo)	1849	1711	1775	1785	1827	2059	2065	2175	2193	2059	2175	2193	2485	2523
(Intermediate Part×Input Part)	(43×43)	(59×29)	(71×25)	(51×35)	(87×21)	(71×29)	(59×35)	(87×25)	(51×43)	(71×29)	(87×25)	(51×43)	(71×35)	(87×29)

Nominal Ratio	8118	8323	8698	8831	9104	9629	9744	9770	10532	10686	11139	11587	11971	12184
Actual Ratio	8118.4	8323.2	8697.5	8830.5	9103.5	9628.8	9744.0	9769.6	10531.5	10685.5	11139.2	11587.2	11971.2	12183.5
Output Stage (Bevel)	3.2	3.2	3.5	3.5	3.5	3.2	3.2	3.2	3.5	3.5	3.2	3.2	3.2	3.5
Input Stage (Cyclo)	2537	2601	2485	2523	2601	3009	3045	3053	3009	3053	3481	3621	3741	3481
(Intermediate Part×Input Part)	(59×43)	(51×51)	(71×35)	(87×29)	(51×51)	(59×51)	(87×35)	(71×43)	(59×51)	(71×43)	(59×59)	(71×51)	(87×43)	(59×59)

Nominal Ratio	12674	13094	13405	14198	14662	15530	16131	16426	17644	17966	19766	21620	24221	26492
Actual Ratio	12673.5	13093.5	13404.8	14198.4	14661.5	15529.5	16131.2	16425.6	17643.5	17965.5	19766.4	21619.5	24220.8	26491.5
Output Stage (Bevel)	3.5	3.5	3.2	3.2	3.5	3.5	3.2	3.2	3.5	3.5	3.2	3.5	3.2	3.5
Input Stage (Cyclo)	3621	3741	4189	4437	4189	4437	5041	5133	5041	5133	6177	6177	7569	7569
(Intermediate Part×Input Part)	(71×51)	(87×43)	(71×59)	(87×51)	(71×59)	(87×51)	(71×71)	(87×59)	(71×71)	(87×59)	(87×71)	(87×71)	(87×87)	(87×87)

Notes: 1. Selection Tables for these ratios may not be available in the catalogue. Please consult us for availablity and technical details.
2. The available models or frame sizes may be limited.
3. Consult us for the rated and allowable values of the torque, radial load, and other technical information.
4. Consult us also higher reduction ratios and ratios that are not shown in these tables.

Product Range of Motor

Table 7: Specification Range of 3 Phase Induction Motors and Brake Motors ●: Standard ○: Available option

Output Power	IEC 3-Phase Induction Motors[1]									IEC 3-Phase Induction Motors with Built-In Brake[1]									
	Number of Poles			Protection	Insulation Class		Inverter Duty[5,6,7]		High Efficiency (IE2)[1,7]	Number of Poles			Protection		Insulation Class		Inverter Duty[5,6,7]		High Efficiency (IE2)[1,7]
KW	4P	6P	4/8P[4]	IP55	F	H	4P	6P	4P	4P	6P	4/8P[4]	IP54	IP55	F	H	4P	6P	4P
0.1	●			●	●	○	○			●			○	●	●	○	○		
0.2	●			●	●	○	○			●			○	●	●	○	○		
0.25	●			●	●	○				●			○	●	●	○			
0.4	●	○	○	●	●	○	○			●	○	○	○	●	●	○	○		
0.55	●	○		●	●	○				●	○		○	●	●	○			
0.75	●	○	○	●	●	○	○		○	●	○	○	○	●	●	○	○		○
1.1	●	○		●	●	○			○	●	○		○	●	●	○			○
1.5	●	○	○	●	●	○	○		○	●	○	○	○	●	●	○	○		○
2.2	●	○	○	●	●	○	○		○	●	○	○	○	●	●	○	○		○
3	●	○		●	●	○			○	●	○		○	●	●	○	○		○
3.7	●	○	○	●	●	○	○		○	●	○	○	○	●	●	○	○		○
5.5	●	○	○	●	●	○	○	○	○	●	○	○	○	●	●	○	○	○	○
7.5	●	○	○	●	●	○	○	○	○	●	○	○	○	●	●	○	○	○	○
11	●	○	○	●	●	○	○	○	○	●	○	○	○	●	●	○	○	○	○
15	●	○	○	●	●	○	○	○	○	●	○	○	●		●	○	○	○	○
18.5	●	○	○	●	●	○	○	○	○	●	○	○	●		●	○	○	○	○
22	●	○	○	●	●	○	○	○	○	●	○	○	●		●	○	○	○	○
30	●	○	○	●	●	○	○	○	○	●	○	○	●		●	○	○	○	○
37	●	○		●	●	○	○	○		●	○		●		●	○	○		
45	●	○		●	●	○				●			●		●	○			
55	●			●	●	○													

Output Power	3-Phase Increased Safety (eG3) Motors (JIS)[8]								3-Phase Flameproof (d2G4) Motors (JIS)[8]								
	Number of Poles		Protection			Insulation Class			Number of Poles		Protection			Insulation Class			Inverter Duty[9]
KW	4P	6P	IP44	IP54	IP55	B	F	H	4P	6P	IP44	IP54	IP55	B	F	H	4P
0.1	●		●	○	○	●	○	○	●		●	○	○	●	○	○	
0.2	●		●	○	○	●	○	○	●		●	○	○	●	○	○	○
0.25																	
0.4	●		●	○	○	●	○	○	●		●	○	○	●	○	○	○
0.55																	
0.75	●		●	○	○	●	○	○	●		●	○	○	●	○	○	○
1.1																	
1.5	●		●	○	○	●	○	○	●		●	○	○	●	○	○	○
2.2	●		●	○	○	●	○	○	●		●	○	○	●	○	○	○
3																	
3.7	●		●	○	○	●	○	○	●		●	○	○	●	○	○	○
5.5	●		●	○	○	●	○	○	●		●	○	○	●	○	○	○
7.5	●	○	●	○	○	●	○	○	●	○	●	○	○	●	○	○	○
11	●	○	●	○	○	●	○	○	●	○	●	○	○	●	○	○	○
15	●	○	●	○	○	●	○	○	●	○	●	○	○	●	○	○	○
18.5	●	○	●	○	○	●	○	○	●	○	●	○	○	●	○	○	○
22	●	○	●	○	○	●	○	○	●	○	●	○	○	●	○	○	○
30	●	○	●	○	○	●	○	○	●	○	●	○	○	●	○	○	○
37	●	○	●	○	○		●	○	●	○	●	○	○		●	○	○
45	●	○	●	○	○		●	○									
55		○	●	○	○		●	○									

Notes:
1. 3-Phase induction motors, High Efficiency (IE2) and brake motors are based on IEC standards, rated for continuous duty.
2. Motors confirming to CCC, NEMA, UL, CSA, JIS standards are also available. Please consult us.
3. Motors with output power (kW) or specifications other than those listed above are also available (eg: special voltage, single phase, dust-proof, high humidity, high temperature, marine duty, dual shaft, wash-down duty, splash-proof, explosion-proof etc). Please consult us for details.
4. Pole Change Motors are rated to constant output torque.
5. Inverter Duty Motors produce constant output torque for 6-60Hz. Options available for 50Hz base frequency.
6. For inverter drive use, consult us with ambient temperature, input speed, mounting method, load characteristics and other operating conditions. Start-up properties, lubrication, thermal rating, etc must be reviewed for proper selection.
7. When using standard induction motors or IE2 motors with inverter, please consult us if the carrier frequency is high (typical in IGBT), wiring distance is large or operating speed is lower than 50% to review the starting and lubrication abilities, thermal rating, withstand voltage etc.
8. 3-Phase safety increased (eG3) and Flameproof (d2G4) motors are based on Japanese specifications (JIS) only.
9. Flameproof (d2G4) motors are approved to be driven by Sumitomo Inverters only and authorised motor - inverter combination is 1:1. Inverter must be installed in area not exposed to explosive gas as inverters do not have explosionproof protection. Consult us for details.

Standard Specifications

Table 8: Standard Specifications of Motor

	Item	Specification	
	Motor Specification	Standard Motor	Motor with Built-In Brake
Three Phase Motor	Capacity	0.1kW×4P ~ 55kW×4P	0.1kW×4P~30kW×4P FB Brake 37kW×4P~45kW×4P ESB Brake
	Protection	IP55 (outdoor)	
	Enclosure	Totally enclosed fan cooled type (or totally enclosed non-ventilated type for 0.1kW×4P)	Totally enclosed fan cooled type (or totally enclosed non-ventilated type for 0.1kW×4P)
	Power Source	50Hz: 200V~240V / 380V~420V 60Hz: 220V / 440V	
	Thermal Class	F: 0.1KW~55kW (Brake section for 37 to 45 kW is class B.)	
	Time Rating	Continuous	
	Terminal Box Position and Lead Wire Direction	Refer to pages 25 to 34.	
	Lead Wires	6 wires: 0.1KW~55kW (⅄ - Δ startup for 5.5KW & above)	8 wires: 0.1KW~45kW (⅄ - Δ startup for 5.5KW & above)
	Standards	IEC	IEC
Inverter duty AF Motor	Capacity	0.1kW × 4P ~ 37kW×4P	0.1kW×4P~22kW×4P FB Brake 30kW×4P~37kW×4P ESB Brake
	Protection	IP55 (outdoor)	
	Enclosure	Totally enclosed fan cooled type	
	Power Source	200V 60Hz, 220V 60Hz	200V 60Hz, 220V 60Hz
	Thermal Class	F: 0.1KW~30kW (Brake section for 30 to 37 kW is class B.)	
	Time Rating	Continuous	
	Terminal Box Position and Lead Wire Direction	Refer to pages 25 to 34.	
	Lead Wires	6 wires: 0.1KW~55kW	8 wires: 0.1KW~45kW
	Standards	In accordance with JIS	In accordance with JIS
High-Efficiency Motor	Capacity	0.2kW × 4P ~ 30kW × 4P	0.2kW×4P~22kW×4P FB Brake 30kW×4P ESB Brake
	Protection	IP55 (outdoor)	
	Enclosure	Totally enclosed fan cooled type	
	Power Source	200V 50/60Hz, 220V 60Hz 400V 50/60Hz, 440V 60Hz	200V 50/60Hz, 220V 60Hz 400V 50/60Hz, 440V 60Hz
	Thermal Class	F: 0.12KW (Class B for brake section)	
	Time Rating	Continuous	
	Terminal Box Position and Lead Wire Direction	Refer to pages 25 to 34.	
	Lead Wires	6 wires: 0.1KW~55kW (⅄ - Δ startup for 5.5KW & above)	8 wires: 0.1KW~45kW (⅄ - Δ startup for 5.5KW & above)
	Standards	JIS C 4034-1, Efficiency: In accordance with JIS C 4212 and IEC60034-30 (0.75~30kW)	JIS C 4034-1, Efficiency: In accordance with JIS C 4212 and IEC60034-30 (0.75~30kW)

Notes: 1. For any non-standard motor specifications, refer to "Motor Section" in Technical Data on pages and later.
2. Consult us if the ⅄- Δ startup is necessary for non-standard voltage classes.
3. High-efficiency motors are manufactured in accordance with IEC60034-30 (IE2). However 0.2~0.4kW motors are manufactured in accordance with JIS C 4212 because they are not covered under IEC specification.

Table 9: Standard Specification of Reduction Section

Item	Specifications
Lubrication Method	Output gear section: Oil lubricated Input gear section (CYCLO Reducer): Oil or grease lubricated
Reduction Method	Output section: Bevel gear Input section: Internal planetary gear with trochoidal curved tooth profile (CYCLO Drive) or simple planetary tooth mechanism (* planetary for ratio 11~18 only)
Rotation direction	Refer to pages <TBA>.

Table 10: Common Specifications

Item		Specifications
Ambient Conditions	Installation Location	Outdoor (a little dust, not splashed with water). Vibration: 1G or less
	Ambient Temperature	-10~40°C
	Ambient Humidity	85% or less
	Elevation	1,000 m or less above sea level
	Atmosphere	Well ventilated location, free of dust, corrosive gases, explosive gases, vapors, and the like
Method of Mounting Note 4		Horizontal or vertical (to be designated at the time of order)
Method of Coupling with Driven Machine		Direct connection with driven shaft by hollow shaft, coupling, gear, chain sprocket, or pulley belt, etc.
Coating		Quality: Modified alkyd system Color: Munsell 6.5PB 3.6/8.2 or equivalent

Note: 4. Consult us if the mounting location contains a slope of 1 degree or more.

Selection Procedure: Gearmotors

The flowchart below is a guide for selection of BBB-4 Gearmotor. Consult us for any questions about the procedure.

- Refer to page 15 for selection procedure of inverter driven gearmotors.
- Refer to page 17 for selection procedure of reducers.

Step 1: Determination of Operating Conditions

Determine the following parameters before starting selection:

- Application
- Continuous operation or operation with frequent start and stop
- Motor capacity (kW) and output speed or reduction ratio
- Radial load and axial load
- Operation hours per day
- Level of shock load
- Mounting direction (output shaft direction) and mounting configuration
- Specifications for motor (e.g., power supply frequency, voltage, and with/without brake)
- Other ambient conditions (temperature, humidity, indoor or outdoor, and others)

Step 2: Model Selection

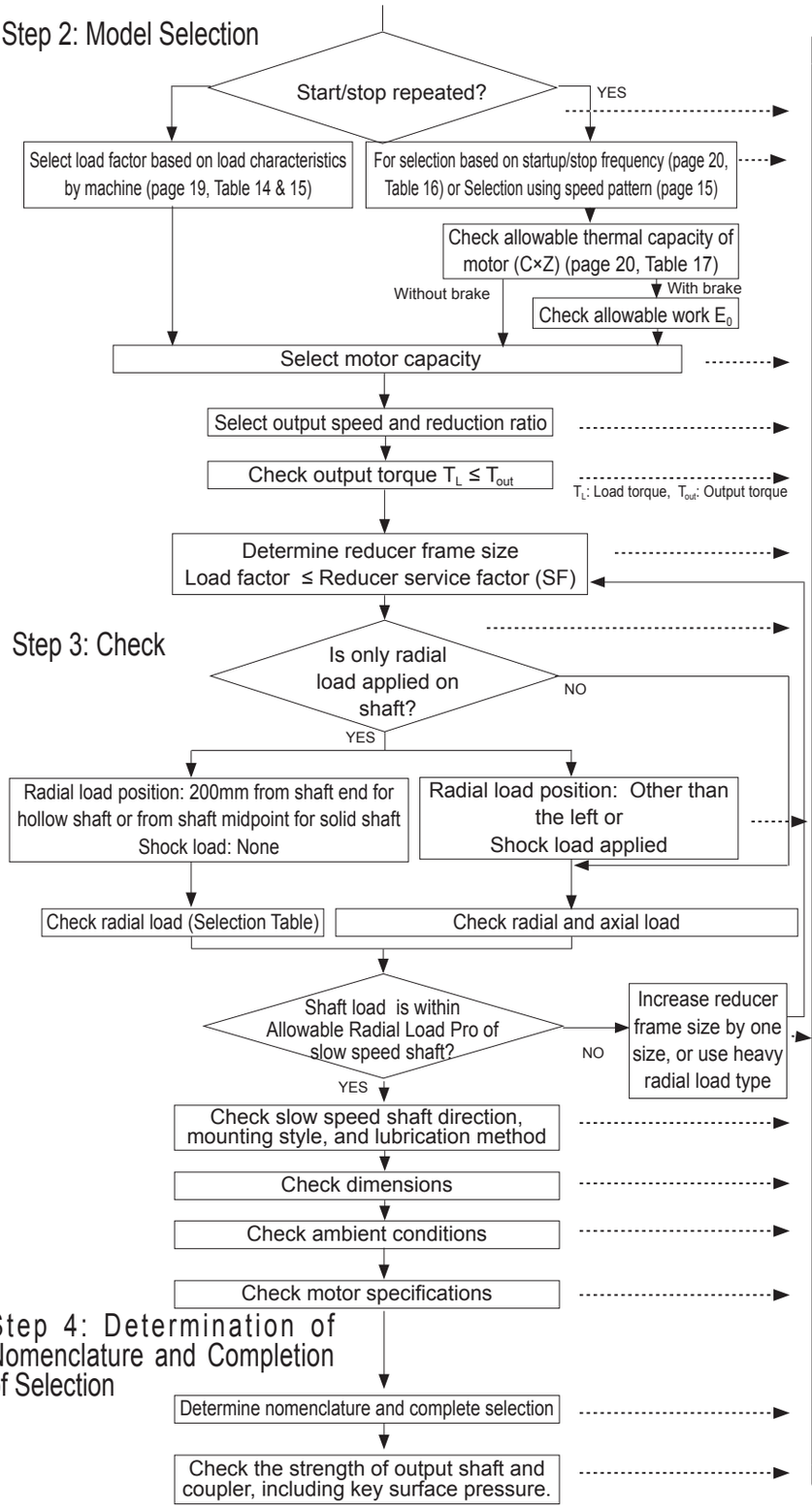

Procedure

- From pages 19 and 20, select the load factor matching your application.
- For operation with repeated starts and stops, check the allowable thermal capacity of the motor on page 20. For a motor with brake, refer to page 21 to ensure that the braking work is within the allowable work E_0.
- Check the brake torque on pages 253 or 256.

- In the selection tables beginning page 54, go to the page that contains the selection table indicating your motor capacity.

- Select the cell that contains a value closest to the output speed or reduction ratio which you are looking for.
- Check whether the output torque is sufficient for your usage. If the output torque is not sufficient, select one size larger motor capacity.
- From the selection table, select the combination with a service factor (SF) larger than the load factor which you selected.

- Check whether only the radial load is applied on the slow speed shaft. If axial load is applicable, make calculation referring to pages 37 to 45.

- Refer to page 37 and make calculation, depending on where the radial load is applied, or whether any shock load is applied.
  - *1. The allowable radial load for slow speed shaft in the selection table is the value obtained when the load position is at the midpoint of the shaft.
  - *2. If the initial tension is applied by using the chain, V-belt, synchronous belt or the like, these tensions should be included in the radial load.

- Check whether the calculated radial load does not exceed the allowable radial load of the output shaft.

- Check whether the selected combination matches the output shaft direction, mounting style, and lubrication method you are looking for.
- Check the dimensions. Consult us if they do not match your requirement.
- Refer to page 12 for standard specification and ambient conditions. Consult us if your requirement is different.

- Check the motor specification on page 11 and 12. Consult us if your requirement is different.

- Determine the nomenclature for the selected model referring to "Nomenclature" on page 23. Now, the selection process is complete.
- Verify the maximum torque for startup and stop.

Selection Procedure: Gearmotors

. Below is an example of model selection that follows the selection procedure detailed on page 13

○ Operating Parameters:

- Application: Chain conveyor
- Operation pattern: Continuous operation
- Operation hours per day: 24 operation hours/day
- Load power: 1.3kW
- Output speed: 21.6r/min
- Method of connection with driven shaft: Chain sprocket
  Initial tension = 0
  Sprocket pitch circle radius: R = 70mm
  Load position: Midpoint of shaft
- Level of shock load : None
- Mounting direction (output shaft direction), mounting style
  : Horizontal, foot mount, and shaft direction left (seen from the motor)

- Motor specifications
  Power frequency : 50Hz
  Voltage : 415V
  Brake : None
  Others : Outdoor type
- Ambient conditions
  Ambient temperature 40°C, indoor

This example selects the model based on the above operation conditions.

Operation conditions, selection, and calculation results	Reference pages in this catalog	
○ Select the load factor Load characteristics for chain conveyor application→Uniform load (U) Load factor = 1.20 (U, 24 operation hours/day)	Pages 19 Table 15 Table 14	 Load Characteristic Table by Machine Load Factor
○ Select the motor capacity Load factor = 1.3kW→Motor capacity = 1.5kW	Page 11	Product Range of Motors
○ Select the output speed Input speed 50Hz, output speed 21.6r/min→1450/21.6 = Reduction ratio 67	Page 69	Gearmotor Selection Table
○ Check the output torque $T_L = \frac{9550 \times 1.3\ (kW)}{1450} \times 67 = 574 N \cdot m \leq 612 N \cdot m \rightarrow OK$ T_L : Load torque	Page 69	Gearmotor Selection Table
○ Determine the reducer frame size Load factor = 1.2 ≤ 1.27 Reducer frame size and reduction ratio: 2-4A100-67	Page 69	Gearmotor Selection Table
○ Check the radial load Pr=TL / R ≤ Pro / Cf Pr=574(N·m) / 0.07(m)=8200(N) ≤ 25000(N) / 1=25000(N)→ OK	Page 37 Page 69	Allowable Radial and Axial Load Gearmotor Selection Table
○ Check the output shaft direction, mounting style, and lubrication method Output shaft direction: Horizontal; Mounting style: Foot mount→Type: LHHM	Page 23	Nomenclature
○ Check the dimensions Use the Dimension Tables.	Page 125	Dimension Table
○ Check the ambient conditions Ambient temperature: 20°C→OK	Page 12	Standard Specification
○ Check the motor specifications 415V 50Hz, outdoor type→OK as the standard	Page 11	Product Range of Motors
◎ Determine the nomenclature Determine the nomenclature as: LHHM2-4A100L-K1-67 Now the selection is complete.	Page 23	Nomenclature

Selection Procedure: Inverter Driven Gearmotors

Flowchart and Formulas for Model Selection by Inverter Drive etc.

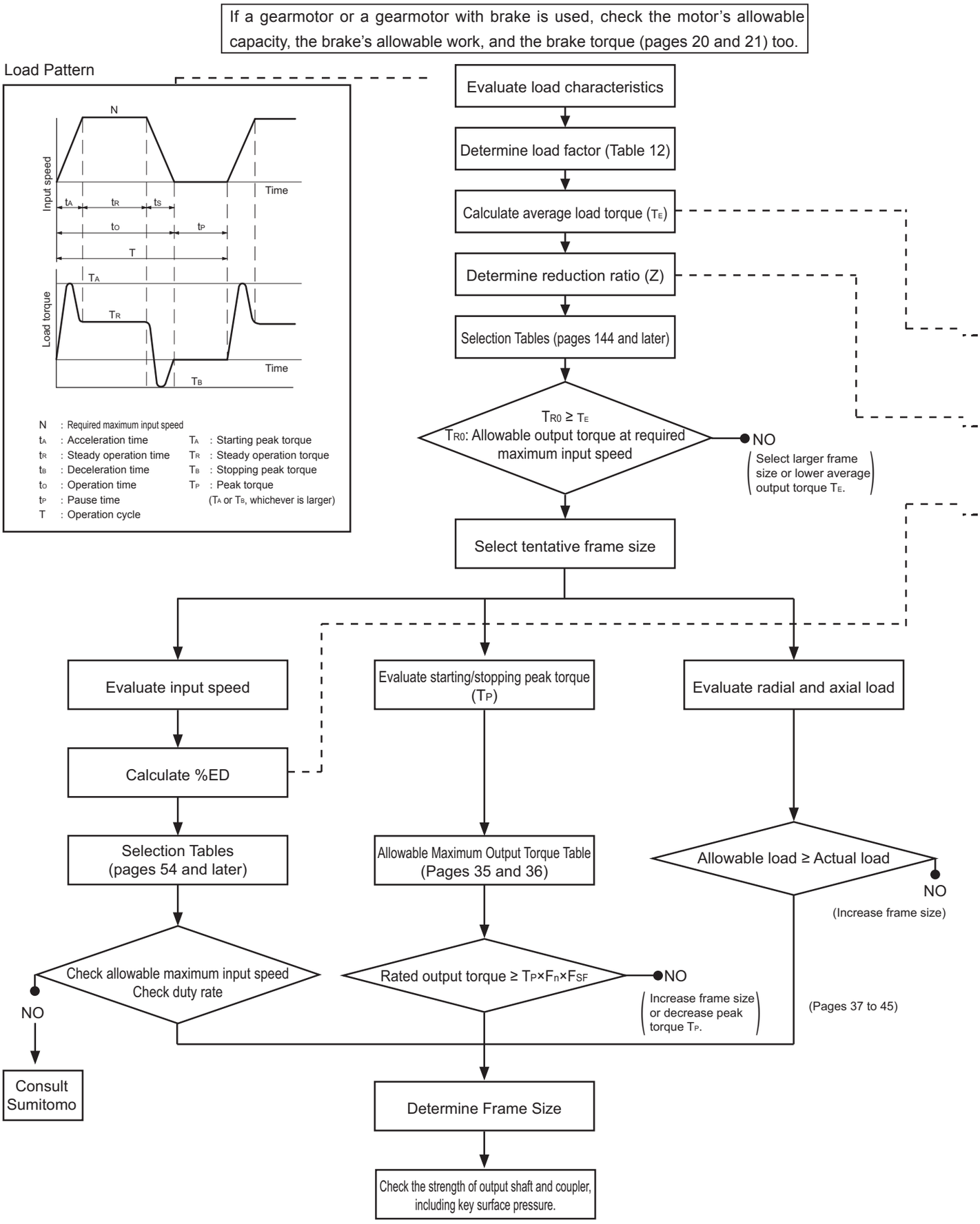

Selection Procedure: Inverter Driven Gearmotors

Table 11 F_n startup frequency coefficient

Startup Frequency	Factor
1~2 times/min	1.0
3~5 times/min	1.1
6~9 times/min	1.2

* Consult us if the startup frequency is outside the above range.

Table 12 F_{SF} Load Factor

Load Conditions / Operation Time	U (Uniform load)	M (Light shock)	H (Heavy shock)
≤ 10 hours/day	1.0	1.2	1.5
24 hours/day	1.2	1.35	1.6

Table 13 Load Characteristic Table by Machine

Conveyors and Distribution Equipment	
conveyors (uniform load)	
apron, assembly, belt, bucket, chain, open, screw	U
conveyors (heavy load, fluctuation load)	
apron, assembly, belt, bucket	M
sorter	M
AGV	M
Robot Peripheral Equipment	
slider	M
positioner	M
* Consult us for a machine marked with an asterisk (*) or not listed above.	
Metalworking machines	
tapping machines	H
punch presses (gears driven)	H
planers	H
bending machines	M
ATC	M
other machine tools	*
Printing Machine	*
Textile Industry	
batchers, calenders, carding machine, dry cans, driers, dyeing machines, mangles, knapping machine, pad slashers, soapers, winders, spinners, tenters, washers, cloth finishers (washing machines, pads, tenters, driers, calenders, etc.)	M

Average load torque

$$T_E=\left(\frac{\frac{1}{2}\cdot T_A^{10/3}\cdot t_A+T_R^{10/3}\cdot t_R+\frac{1}{2}\cdot T_B^{10/3}\cdot t_B}{\frac{1}{2}\cdot t_A+t_R+\frac{1}{2}\cdot t_B}\right)^{0.3} \quad \text{(Formula 1)}$$

Reduction ratio

$$Z=\left(\frac{\text{Required output speed}}{\text{Required maximum input speed}}\right) \quad \text{(Formula 2)}$$

%ED

$$\%ED=\frac{t_O}{T}\times 100 \quad \text{(Formula 3)}$$

The maximum operation cycle used for calculation of %ED is 10 minutes. If the operation cycle exceeds 10 minutes, calculate %ED with T = 10 (minutes).

2. Selection Example

<Application> Electric cart

<Specifications>

T_A	:Starting peak torque	600Nm	n :Required output speed	29.5 rpm
T_R	:Steady operation torque	400Nm	t_A :Acceleration time	0.5 sec
T_B	:Stopping peak torque	500Nm	t_R :Steady operation time	6.5 sec
			t_B :Deceleration time	1.0 sec
			t_O :Operation time	8.0 sec
			t_P :Pause time	8.0 sec
			T :Operation cycle	16.0 sec

Radial load 6000N at midpoint of output shaft
Rated speed of motor 1750r/min, 10 operation hours/day

<Calculation>

- Determine the load factor — Fn=1.1 F_{SF}=1.0 (Tables 11 to 13)
- Calculate the average load torque — $T_E=\left(\frac{\frac{1}{2}\times 600^{10/3}\times 0.5+400^{10/3}\times 6.5+\frac{1}{2}\times 500^{10/3}\times 1}{\frac{1}{2}\times 0.5+6.5+\frac{1}{2}\times 1.0}\right)^{0.3}=419.8\text{N•m}$ (Formula 1)
- Determine the reduction ratio — $Z=\left(\frac{29.5}{1750}\right)=\frac{1}{59}\fallingdotseq\frac{1}{60}$ (Formula 2)
- Allowable output torque at the required maximum input speed — T_{RO}=594(N•m) > 419.8(N•m)→Assume the frame size to be 4A100-60 tentatively. (Page 145)
- Calculate %ED — $\%ED=\frac{8}{16}\times 100=50\%$ (Formula 3)
- Check the maximum input speed — 1750 rpm at 50% ED < 1750 rpm at 100% ED (Page 145)
- Check the starting and stopping peak torques — 600(N•m)×1.1×1.0=660(N•m) < 849(N•m) (Page 35~36)
- Slow-speed shaft allowable radial load determined taking the coefficient into account — Pro=26100(N)、Lf=1.0、Cf=1.25、Fs=1.2

$$\frac{Pro}{Lf\times Cf\times Fs}=\frac{26100}{1.0\times 1.25\times 1.2}=17400(N)>6000(N)$$ (Page 37)

4A100-60 is selected based on the above procedure.

Selection Procedure: Reducers

Select models using the flow chart below. Consult us for questions about the selection procedure.

Step 1: Determination of Operating Conditions

Determine the following conditions before starting selection:

- Application
- Continuous operation or operation with frequent startup and stop
- Load torque T_L
- Radial load and axial load
- Operation hours per day
- Level of shock load
- Mounting direction (direction of output shaft) and mounting configuration
- Other ambient conditions (temperature, humidity, indoor or outdoor, and other environments)

Step 2: Model Selection

Select load factor

Select input speed

Select output speed and reduction ratio

Calculate actual transmitted torque T_{Ln} $T_{Ln} = T_L \times$ [Load factor]

T_L:Load torque

Determine frame size

Actual transmitted torque T_{Ln} ≤ Allowable output torque of reducer T_{out}

Step 3: Check

Is only the radial load applied on shaft?

NO

YES

Radial load position: Shaft midpoint
Shock load: None

Radial load position: Outward from shaft midpoint
or
Shock load: Applied

Check radial load

Check radial and axial load

Shaft load is within Allowable Radial Load Pro of slow speed shaft?

NO

Increase reducer frame size by 1 size, or use heavy radial load type

YES

Check slow speed shaft direction, mounting style, and lubrication method

Check dimensions

Check ambient conditions

Step 4:Determination of Nomenclature and Completion of Selection

Determine nomenclature and complete selection

Check the strength of input and output shafts and the coupler (key surface pressure etc.)

Procedure

- From pages 19 and 20, select the load factor matching the application.
- On the reducer selection table section following page 144, refer to the page corresponding to the input speed you wish to select.
- Select the cell containing a value closest to the output speed or reduction ratio you are looking for.

* Consult us if the input shaft is vertically downward, because the selection tables on page 144 and later are inapplicable in that case.

- Calculate the actual transmitted torque from the load torque and load factor.
- From the selection table, select the reduction ratio and frame size that the allowable output torque is larger than the actual transmitted torque.
- Check whether only the radial load is applied on the reducer's input and output shafts. If the axial load is also applied on them, make calculation referring to pages 37 to 45.
- Refer to the factor on page 37, depending on where the radial load is applied and whether shock load is applied or not, and convert the value.

  *1 The output shaft allowable radial load in the selection table is a value satisfied when the load position is at the midpoint of the shaft.

  *2 If the initial tension is applied using the chain, V-belt, synchronous belt, or the like, these tensions should be included in the radial load.
- Check whether the calculated radial load exceeds the allowable radial load of the output shaft.
- Check whether the selected combination matches the output shaft direction, mounting style, and lubrication method you are looking for.
- Check the dimensions. Consult us if they do not match your requirement.
- By referring to "Standard Specifications" on page 12 check whether the selected combination matches the ambient conditions, etc.
- Determine the nomenclature for the selected model referring to "Nomenclature" on page 23. Now, the selection process is complete.
- Check with the maximum torque for startup and stop.

Selection Procedure: Reducers

Below is an example of selection following the procedure on page 17.

○ Operation conditions

- Application: Chain conveyor
- Operation pattern: Continuous operation
- 24 operation hours/day
- Load torque: 700N・m
- Input speed: 1450 rpm
- Output speed: 16.5 rpm
- Connection with machine :
  - Output side: Chain sprocket
    - Sprocket pitch circle radius: R=80mm
    - Load position: Midpoint of shaft; Initial tension = 0
  - Input side: Coupling
- Level of shock load: None
- Mounting direction (output shaft direction), mounting style : Horizontal, foot mount, solid shaft; and shaft direction is left viewed from the motor.

This example selects the model based on the above operation conditions.

Operation conditions, selection, and calculation results	Reference page in this catalog
○ Select the load factor Load characteristics for chain conveyor application → Uniform load (U) Load factor = 1.20 (U, 24 operation hours/day)	Pages 19 and 20 Table 15 Load characteristics by machine Table 14 Reducer Load Factor
○ Select the input speed 1450rpm	
○ Select the output speed Input speed 1450rpm, output speed 16.5rpm → 1450/16.5 = Reduction ratio 88	
○ Calculate the actual transmitted torque T_{nL}=700 (N・m)×1.2=840 (N・m)	
○ Determine the reducer frame size $T_{nL} \leq T_{out}$→840 (N・m) ≤ 889 (N・m) Reducer frame size: 4A105	Page 166 Reducer selection table
○ Check the radial load Output side: Pr=TL / R ≤ Pro / Cf Pr=700(N・m) / 0.080(m) =8750(N) ≤ 22000(N) / 1=22000(N) → OK Input side: No radial load because of coupling connection.	Page 37 Allowable Radial and Axial Load Page 166 Reducer Selection Table
○ Check the output shaft direction, mounting style, and lubrication method Output shaft direction: Horizontal; Mounting style: Foot mount → Type: LHH	Page 23 Nomenclature
○ Check the dimensions Use the Dimension Tables.	Page 207 Dimension Tables
○ Check the ambient conditions Ambient temperature: 20°C	Page 12 Standard Specifications
◎ Determine the nomenclature Determine the nomenclature as: LHH-4A105L-K1-88	Page 23 Nomenclature
Now the selection is complete.	

Load Factor for Continuous Duty Operation

1. Please refer to Tables 14 & 15 for recommended load factor modifiers for continuous duty applications.
2. The values on the selection tables are based on an operation of 10 hours per day with uniform load.
3. For applications with start/stop operations, please refer to page 20.

■ Recommended Load Factor by Application.

[Load Factor] U: Uniform load M: Moderate shock H: Heavy shock

Table 14 Reducer Load Factor

Daily duty	~3 hours/day			~10 hours/day			~24 hours/day		
	U	M	H	U	M	H	U	M	H
Load Factor	0.80	1.00	1.35	1.00	1.20	1.50	1.20	1.35	1.60

Table 15 Recommended Load Classifications

Type of APPLICATION	Type of LOAD
*Aerator	
Agitators.	
pure liquids	U
liquids & solids	M
liquids-variable density	M
Blowers	
centrifugal	U
lobe	M
vane	U
Brewing & Distilling	
bottling machinery	U
brew kettles, cont. duty	U
cookers-cont. duty	U
mash tubs-cont. duty	U
scale hopper, frequent starts	M
Can Filling Machines	U
*Cane Knives	M
Car Dumpers	H
Car Pullers	M
Clarifiers	U
Classifiers	M
Clay Working Machinery	
brick press	H
briquette machine	H
clay working machinery	M
pug mill	M
Compressors	
centrifugal	U
lobe	M
reciprocating, multi-cylinder	M
reciprocating, single-cylinder	H
Conveyors-Uniformly Loaded or Fed	
apron	U
assembly	U
belt	U
bucket	U
chain	U
flight	U
oven	U
screw	U
Conveyors-Heavy Duty Not Uniformly Fed	
apron	M
assembly	M
belt	M
bucket	M
chain	M
flight	M
*live roll	
oven	M
reciprocating	H
screw	M
shaker	H
Cranes (Except for Dry Dock Cranes)	
main hoists	
*bridge travel	
*trolley travel	
Crusher	
ore	H
stone	H
**sugar	M
Dredges	
cable reels	M
conveyors	M
cutter head drives	H
jig drives	H
maneuvering winches	M
pumps	M
screen drive	H
stackers	M
utility winches	M
*Dry Dock Cranes	
Elevators	
bucket - uniform load	U
bucket - heavy load	M
bucket - cont.	U
centrifugal discharge	U
escalators	U
freight	M
gravity discharge	U
*man lifts	
*passenger	
**Extruders (Plastics)	
blow molders	M
coating	U
film	U
pipe	U
pre-plasticizers	M
rods	U
sheet	U
tubing	U
Fans	
centrifugal	U
*cooling towers	
induced draft	U
*forced draft	
induced draft	M
large (mine, etc.)	M
large (industrial)	M
light (small diameter)	U
Feeders	
apron	M
belt	M
disc	U
reciprocating	H
screw	M
Food industry	
beet slicer	M
cereal cooker	U
dough mixer	M
meat grinders	M
Generators (not welding)	U
Hammer mills	H
Hoists	
heavy duty	H
medium duty	M
skip hoist	M
Laundry Washers	
reversing	M
Laundry Tumblers	M
Line Shaft	
driving processing equipment	M
light	U
other line shafts	U
Lumber Industry	
barkers-hydraulic-mechanical	H
burner conveyor	M
chain saw & drag saw	H
chain transfer	H
craneway transfer	H
de-barking drum	H
edger feed	M
gang feed	H
green chain	M
live rolls	H
log haul-locline	H
log haul-well type	H
log turning device	H
main log conveyor	H
off bearing rolls	M
planer feed chains	M
planer floor chains	M
planer tilting hoist	M
re-saw merry- go-round conveyor	M
roll cases	H
slab conveyor	H
small waste-conveyor-belt	U
small waste-conveyor-chain	M
sorting table	M
tipple hoist conveyor	M
tipple hoist drive	M
transfer conveyors	M
transfer rolls	M
tray drive	M
trimmer feed	M
waste conveyor	M
Machine Tools	
bending roll	M
punch press-gear driven	H
*notching press-belt driven	
plate planers	H
tapping machine	H
other machine tools	
main drives	M
auxiliary drives	U
Metal Mills	
draw bench carriage & main drive	M
forming machines	H
*pinch, dryer & scrubber rolls, reversing	
slitters	M
table conveyors-non-reversing group drives	M
individual drives	H
*table conveyors-reversing	
wire drawing & flattening machine	M
wire winding machine	M
Mills, Rotary Type	
**ball	M
**cement kilns	M
**dryers & coolers	M
kilns	M
**pebble	M
**rod , plain & wedge bar	M
tumbling barrels	H
Mixers	
concrete mixers, cont.	M
concrete mixers, intermittent	M
constant density	U
variable density	M
Oil Industry	
chillers	M
*oil well pumping	
paraffin filter press	M
rotary kilns	M
Paper Mills	
agitators (mixers)	M
barker-auxiliaries-hydraulic	M
barker-mechanical	M
barking drum	H
beater & pulper	M
bleacher	U
calenders	M
calenders-super	H
converting machine, except cutters, platers	M
conveyors	U
couch	M
cutters-platers	H
cylinders	M
dryers	M
Paper Mills	
felt stretcher	M
felt whipper	H
jordans	H
log haul	H
presses	U
pulp machine reel	M
stock chests	M
suction roll	U
washers & thickeners	M
winders	U
*Printing Presses	
Pullers	
barge haul	H
Pumps	
centrifugal	U
proportioning	M
reciprocating single acting, 3 or more cylinders	M
double acting, 2 or more cylinders	M
*single acting, 1 or 2 cylinders	
*double acting, single cylinder	
rotary-gear type	U
rotary-lobe, vane	U
Rubber & Plastics Industries	
**crackers	H
laboratory equipment	M
**mixing mills	H
**refiners	M
**rubber calenders	M
**rubber mill (2 on line)	M
**rubber mill (3 on line)	U
**sheeter	M
*tire building machines	
*tire & tube press openers	
**tubers & strainers	M
**warming mills	M
Sand Muller	M
Screens	
air washing	U
rotary-stone or gravel	M
traveling water intake	U
Sewage Disposal Equipment	
bar screens	U
chemical feeders	U
collectors, circuline or straightline	U
dewatering screws	M
grit collectors	U
scum breakers	M
slow or rapid mixers	M
sludge collectors	U
thickeners	M
vacuum filters	M
Slab Pushers	M
*Steering Gear	
Stokers	U
Sugar Industry	
**cane knives	M
**crushers	M
**mills	H
Textile Industry	
batchers	M
calendars	M
cards	M
dry cans.	M
dryers	M
dyeing machinery	M
*knitting machines	
looms	M
mangles	M
nappers	M
pads	M
*range drives	
slashers	M
soapers	M
spinners	M
tenter frames	M
washers	M
winders	M
*Windlass	

Remarks: *Consult factory. **To be selected on basis of 24 hr. service only.
Note: Table above contains reference value. Names and mechanical characteristics of the actual machine may differ from the table above.

Load Factor for Start/Stop Operation

For recommended Load Factor Modifications for Frequent Start-Stop Operation, refer to tables 16 and 17.

Table 16 Number of Starts-Stops and Load Factor

Number of starts-stops [times/hour]	~3 hours/day			~10 hours/day			~24 hours/day		
	I	II	III	I	II	III	I	II	III
~10	0.80	1.00	1.20	1.00	1.10	1.35	1.20	1.25	1.50
~200	0.85	1.10	1.30	1.10	1.30	1.50	1.25	1.50	1.65
~500	0.90	1.20	1.40	1.15	1.45	1.60	1.30	1.60	1.75

$$\text{The ratio of Moment of Inertia (The ratio of GD}^2\text{)} = \frac{\text{Total Moment of Inertia (GD}^2\text{) as seen from the motor shaft}}{\text{Moment of Inertia (GD}^2\text{) of motor}}$$

Load Factor
I : Allowable ratio of Moment of Inertia (GD^2) ≤ 0.3
II : Allowable ratio of Moment of Inertia (GD^2) ≤ 3
III: Allowable ratio of Moment of Inertia (GD^2) ≤ 10

Note:
1. The number of starts-stops includes brake or clutch operation times.
2. Consult us when starting under loaded conditions.
3. Consult us if the start/stop frequency exceeds 500 times/hour, because brake for high frequency may be required.
4. In case of high efficiency motors, consult us if start/stop frequency exceeds 10 times/hour and the ratio of moment inertia exceeds 0.2, because the starting torque of high efficiency motors is large.

Table 17 Allowable Thermal Capacity of Motor (C×Z)

Motor Output [kW]	Allowable C×Z				Moment of Inertia of Motor [kg·m²]		GD² of Motor [kgf·m²]	
	(35%ED or less)	(35% ED over~ 50% ED or less)	(50% ED over~ 80% ED or less)	(80% ED over~ 100% ED or less)	Standard	With brake	Standard	With brake
0.1	3200	3000	2000	1200	0.00033	0.00035	0.0013	0.0014
0.2	2200	2800	2800	2500	0.00050	0.00055	0.002	0.0022
0.25	2200	2800	2800	2500	0.00050	0.00055	0.002	0.0022
0.4	1800	2200	1500	1500	0.00065	0.00068	0.0026	0.0027
0.55	1800	2200	1500	1500	0.00101	0.00111	0.00405	0.00445
0.75	1400	1400	800	500	0.00120	0.00130	0.0048	0.0052
1.1	1400	1400	800	500	0.00185	0.00208	0.0074	0.0083
1.5	1200	1200	500	400	0.00213	0.00235	0.0085	0.0094
2.2	1000	900	400	200	0.00333	0.00373	0.0133	0.0149
3.0	1000	900	400	200	0.00700	0.00810	0.0281	0.0325
3.7	800	800	800	700	0.00848	0.00958	0.0339	0.0383
5.5	300	300	200	150	0.01143	0.01253	0.0457	0.0501
7.5	400	350	300	300	0.02675	0.03025	0.1070	0.121
11	200	200	150	150	0.03750	0.04100	0.1500	0.164

Check that the C×Z value obtained in Steps [1] to [3] below is within the allowable CZ value in the appropriate motor capacity and %ED values in Table 17.

[1] Obtain C using following formulas:

[International System of Units] $C = \frac{J_M + J_L}{J_M}$

J_M : Moment of inertia of motor [kg·m²]
J_L : Converted value at motor shaft; total moment of inertia excluding motor [kg·m²]

[Gravitational units] $C = \frac{GD_M^2 + GD_L^2}{GD_M^2}$

GD_M^2 ; GD^2 of motor [kgf·m²]
GD_L^2 ; Total GD^2 at the motor shaft excluding motor [kgf·m²]

(To next page)

Load Factor for Start/Stop Operation

[2] Obtain the number of startup times per hour Z [times/hr].

(a) If the startup takes place n times for every cycle (i.e., n_r [times/cycle]), and the operation and pause times for one cycle are t_a [sec] and t_b [sec] respectively,

$$Z_r = \frac{3600 n_r}{t_a + t_b} \text{ [times/hr]}$$

(b) If inching takes place n_i times for every cycle (t_a+t_b) (i.e., n_i [times/cycle]), it is converted into the number of inching times Z_i per hour.

$$Z_i = \frac{3600 n_r}{t_a + t_b} \text{ [times/hr]}$$

(c) Obtain the number of times per hour Z [times/hr] from (a) and (b) above.

$$Z = Z_r + \frac{1}{2} Z_i = \frac{3600}{t_a + t_b} \cdot \left(n_r + \frac{1}{2} n_i\right) \text{ [times/hr]}$$

[3] Obtain C×Z.

Obtain the product of the C value obtained in Step [1] and the Z value obtained in Step [2], i.e., C×Z.

[4] Duty rate %ED

$$\% \text{ ED} = \frac{t_a}{t_a + t_b} \times 100$$

Table 18 Allowable Work of Motor Brake E_0

Unit : E_0(J/min)

kW(4P)	0.1	0.2 / 0.25	0.4	0.55 / 0.75	1.1 / 1.5	2.2	3.0 / 3.7
Brake Type	FB-01A1	FB-02A1	FB-05A1	FB-1B	FB-2B	FB-3B	FB-5B
Allowable Work E_0	1080	1080	1080	1620	2580	3360	6900

kW(4P)	5.5	7.5	11	15	18.5 / 22 / 30	37 / 45
Brake Type	FB-8B	FB-10B	FB-15B	FB-20	FB-30	ESB-250
Allowable Work E_0	6900	10800	10800	22440	22440	30672

[5] Check the brake torque on pages 253 and 256.

Understanding Selection Tables

Gearmotor: Below illustration describes the main fields of each selection tables on page 54 onwards.

Motor capacity [kW]

Input speed [rpm] (motor frequency, number of poles)

Important notes on using selection tables

1.5 kW	Frequency	Hz	50Hz	60Hz
	Motor poles	P	4	
	Motor speed n_1	r/min	1450	1750

IMPORTANT :
Please refer to page 54 for Gearmotor Selection Table notes.

Reduction ratio 80 ► 364

50Hz						60Hz						Model (refer to page 23)				Dimensional Drawing Page	Options Available Note 11	
Output Speed n_2	Output Torque T_{out}		Allowable Radial Load of Output Shaft Pro		SF_G	Output Speed n_2	Output Torque T_{out}		Allowable Radial Load of Output Shaft Pro		SF_G	Capacity Symbol	Frame Size	Reduction Ratio			AF Motor Note 10	High-Efficiency Motor
r/min	N·m	kgf·m	N	kgf		r/min	N·m	kgf·m	N	kgf								
18.1	729	74.3	23900	2440	1.11	21.9	604	61.6	25000	2550	1.11	2	4A105	80		125	●	●
			23900	2440	1.48				25000	2550	1.48	2	4A115	80		125	●	●
			23900	2440	1.77				25000	2550	1.77	2	4A120	80		125	●	●
			42100	4290	2.06				40100	4090	2.06	2	4B120	80		127	●	●
			42100	4290	2.64				40100	4090	2.64	2	4B125	80		127	●	●
16.6	797	81.2	23200	2360	1.11	20.0	660	67.3	24600	2510	1.11	2	4A105	88		125	●	●
			23200	2360	1.48				24600	2510	1.48	2	4A115	88		125	●	●
			23200	2360	1.62				24600	2510	1.62	2	4A120	88		125	●	●
			43000	4380	2.06				41100	4190	2.06	2	4B120	88		127	●	●
			43000	4380	2.64				41100	4190	2.64	2	4B125	88		127	●	●

Output Speed [rpm]

SF (Service Factor)

Dimensional Drawing Page

* The output speed is calculated from the actual reduction ratio, except for ratios 11 to 18 where representative reduction ratio is used (as the actual reduction ratio for these ratios vary with frame size.)

Note that each reduction ratio in the "Type" column is the nominal reduction ratio.

This indicates the combinations that allow the standard AF and high-efficiency motors.

Reducer: Below illustration describes the main fields of each selection tables on page 144 onwards.

Input Speed

■**IMPORTANT**: Please refer to page 144 for Reducer Selection Table notes.

Size	n1	1450				980				720				50		
	Ratio i	n2 [rpm]	P1 [kW]	Tout [rpm]	Pro [N]	n2 [rpm]	P1 [kW]	Tout [rpm]	Pro [N]	n2 [rpm]	P1 [kW]	Tout [rpm]	Pro [N]	n2 [rpm]	Tout [rpm]	Pro [N]
4D160 [Dimension Drawings from page 198]	54	26.9	13.1	4330	66200	18.2	11.2	5470	72500	13.4	8.2	5450	81200	1.0	5450	83100
	60	24.2	13.1	4720	67100	16.4	11.2	5960	73400	12.0	8.2	5960	79700	0.9	5960	79700
	67	21.7	12.9	5260	68300	14.7	9.1	5450	78300	10.8	6.7	5450	83100	0.8	5450	83100
	74	19.6	12.9	5760	69100	13.3	9.1	5960	79400	9.8	6.7	5960	79700	0.7	5960	79700
	80	18.2	9.9	4790	74300	12.3	7.6	5450	83100	9.0	5.6	5450	83100	0.7	5450	83100
	88	16.5	9.9	5240	75500	11.2	7.6	5960	79700	8.2	5.6	5960	79700	0.6	5960	79700
	93	15.6	9.6	5390	76600	10.6	6.5	5450	83100	7.8	4.8	5450	83100	0.6	5460	83100
	102	14.3	9.6	5890	77600	9.7	6.6	5960	79700	7.1	4.8	5960	79700	0.5	5960	79700
	112	13.0	8.1	5450	81800	8.8	5.5	5450	83100	6.5	4.0	5450	83100	0.5	5450	83100
	123	11.8	8.1	5960	79700	8.0	5.5	5960	79700	5.9	4.0	5960	79700	0.5	5960	79700
	138	10.6	6.5	5390	83400	7.1	4.4	5390	83400	5.3	3.2	5380	83400	0.4	5380	83400
	151	9.6	6.5	5890	80200	6.5	4.4	5890	80200	4.8	3.2	5890	80200	0.4	5890	80200
	163	8.9	5.5	5450	83100	6.1	3.7	5450	83100	4.5	2.7	5450	83100	0.4	5460	83100
	179	8.1	5.5	5960	79700	5.5	3.8	5960	79700	4.1	2.8	5960	79700	0.3	5960	79700

Frame size

Ratio

Technical Specifications

Nomenclature

L	H	Y	M		3	–	4A105		–		–		Y1	–	B	–	46
①	②	③	④	⑤	⑥		⑦	⑧		⑨		⑩	⑪		⑫		⑬

① Product Symbol

Bevel BUDDYBOX® Reducer: L

② Output Shaft Direction

	Output shaft direction: Horizontal	H	Output shaft direction: Vertical (hollow shaft) or vertically downward (solid)	V	Output shaft direction: Vertically upward (solid shaft)	W
Gearmotor	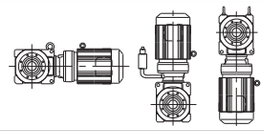		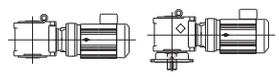		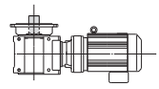	
Reducer	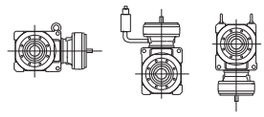		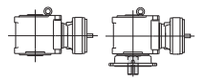		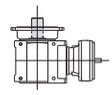	

③ Mounting Style

	Hollow Shaft Type	Y	Solid Shaft Type, Case Mount	U	Solid Shaft Type, Flange Mount	F	Foot Mount	H
Gearmotor	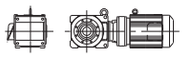		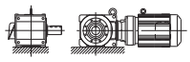				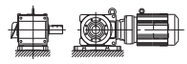	
Reducer	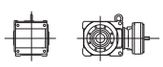		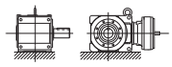		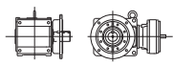		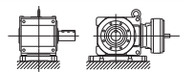	

④ Motor Input Method

	Integrated Motor Type	M	With Motor Adaptor & Motor	JM	Input Hollow & Motor	XM
Gearmotor	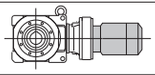		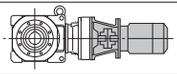		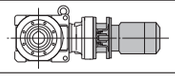	
Reducer	Reducer with free Input Shaft	(blank)	With Motor Adaptor	J	Input Hollow	X
	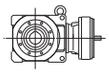		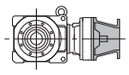		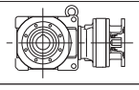	

⑤ Special Specifications

Standard Specification	(blank)
Special Specification	S

⑥ Motor Capacity Symbol

4-Pole	Capacity Symbol kW (HP)	01 0.1 (1/8)	02 0.2 (1/4)	03 0.25 (1/3)	05 0.4 (1/2)	08 0.55 (3/4)	1 0.75 (1)	1H 1.1 (1.5)
	Capacity Symbol kW (HP)	2 1.5 (2)	3 2.2 (3)	4 3.0 (4)	5 3.7 (5)	8 5.5 (7.5)	10 7.5 (10)	15 11 (15)
	Capacity Symbol kW (HP)	20 15 (20)	25 18.5 (25)	30 22 (30)	40 30 (40)	50 37 (50)	60 45 (60)	75 55 (75)

⑦ Frame Size

☞ Refer to Table 3, page 9

⑧ Output Shaft Projection

	(Hollow Bore)	(blank)	Left Side Note	L	Right Side Note	R	Both Side	T
Gearmotor	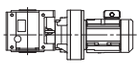		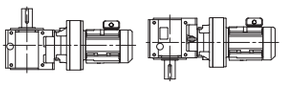		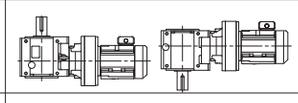		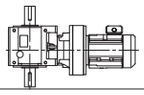	
Reducer	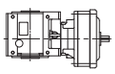		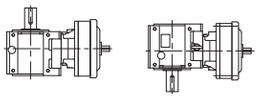		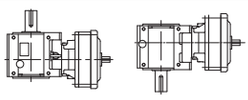		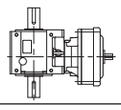	

⑨ Shaft Specification

Metric Size (Standard)	(blank)
Taper Grip Metric Size	M

⑩ Suffix

Standard Specification	(blank)	Servo Motor	SV
AF Motor	AV	With Torque Limiter	TL
High-Efficiency Motor	ES		

⑪ Mounting Position

☞ Refer to 24~33

⑫ With/Without Brake

Without brake	(blank)
With brake	B

⑬ Reduction Ratio

Nominal reduction ration (For the actual reduction ratio, refer to page 9 & 10)

Note: For Bevel BUDDYBOX, the centers of the motor and gear case are not aligned.
The shaft projection from the case surface near the input shaft center line is denoted as L, and that from the case surface away from the center line as R.
For details, refer to pages 25 to 33.

Mounting Positions

1. Mounting position and nomenclature

- Check the mounting configuration relative to the mechanical equipment.
- The mounting position symbol denotes the mounting surface and mounting style of the reducer. For details, refer to items 2 and 3 on this page and pages 25 to 34.
  (The figure below shows mounting positions of hollow shaft units as typical examples.)

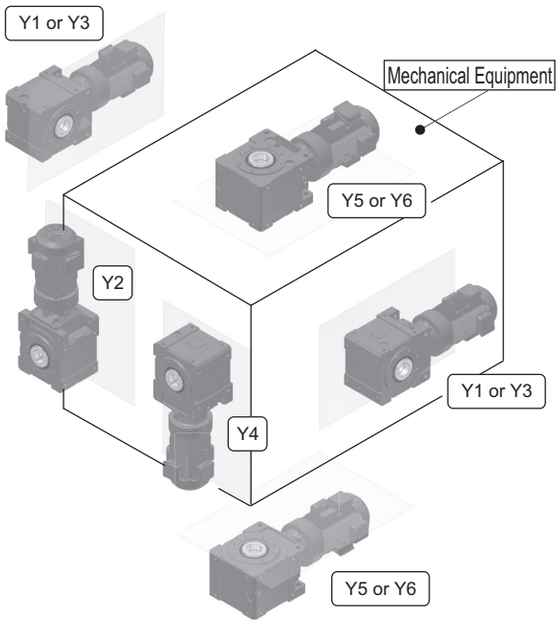

2. Positional Relationship between the Motor Center and Gear Case

- The centers of the motor and gear case are not aligned.

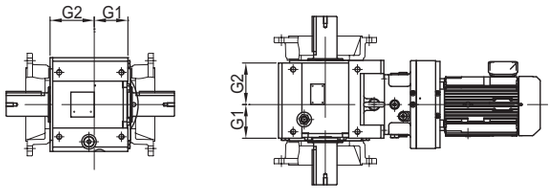

Positional Relationship between the motor center and gear case
(Dimension G2 > G1)

- Thus, the gearmotor can be mounted in two manners, except for some mounting styles. For example, mounting position Y3 against Y1 and mounting position Y6 against Y5 are installed with the gear case rotated 180 degrees relative to the motor; the relative position to the mechanical equipment can be changed.

Example: Differences between mounting positions Y5 and Y6

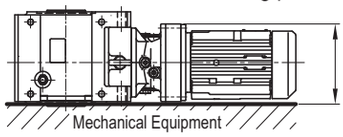

Y5 The center of motor is nearer to the mechanical equipment.

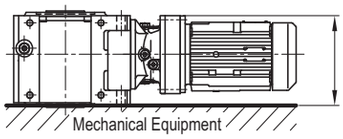

Y6 The center of motor is nearer to the opposite end of the mechanical equipment.

3. Mounting Styles

- Check the mounting style (The figures below show the mounting styles with mounting position symbols ○1. Foot mount, wall mount and ceiling mount are also available (pages 31 to 33).

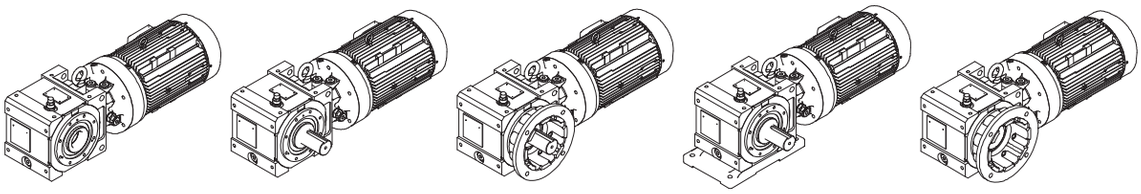

LHYM-□—Y1	LHUM-□L—Y1	LHFM-□L—F1	LHHM-□L—K1	LHYM-□—F1
Hollow Shaft, Shaft Mount	Solid Shaft, Case Mount	Solid Shaft, Flange Mount	Solid Shaft, Foot Mount	Hollow Shaft, Flange Mount

Example of Nomenclatures

Example 1(Gearmotor):

LHYM2 - 4A105 - Y1 - 88

L	: Model	- Bevel BUDDYBOX®
H	: Output shaft direction	- Horizontal
Y	: Mounting style	- Hollow shaft, shaft mount
M2	: Motor equipped, Power : 2 HP (1.5kW)	
4A105	: Frame size	- 4A105
Y1	: Mounting position	- Y1
88	: Reduction ratio	- 88

Example 2(Reducer):

LHF - 4C140L - F1 - 67

L	: Model	- Bevel BUDDYBOX®
H	: Output shaft direction	- Horizontal
F	: Mounting style	- Flange mount
4C140	: Frame size	- 4C140
L	: Output shaft projection	- L side (refer to page 23)
F1	: Mounting position	- F1
67	: Reduction ratio	- 67

Mounting,Terminal Box Positions and Direction of Rotation

Mounting Positions Y1 F1 G1 K1

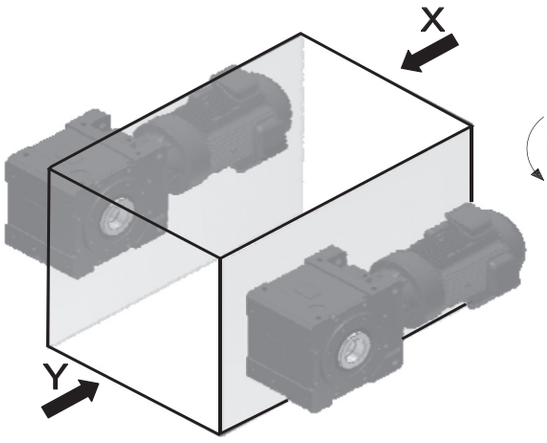

X～

Mounting Positions Y1,G1,K1

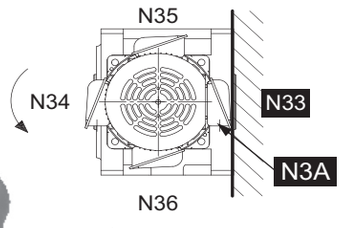

Mounting Positions Y1,F1,K1

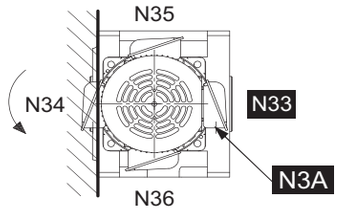

: Rotation direction of motor or input shaft Note 1, 2

: Standard terminal box position and cable port direction

●The standard terminal box position is N33, and the cable port direction is N3A.
The terminal box position and the cable port direction can be changed in 90-degree steps. Refer to page 34.

Y～

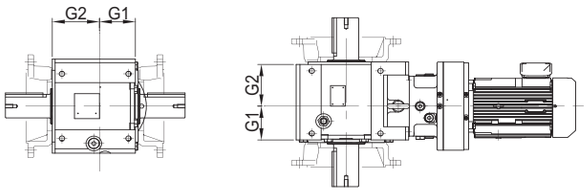

●The centers of the motor and gear case are not aligned (dimension G2 > G1).
●The reducer shape varies with the type. For some types, the motor diameter is larger than the gear case. Be sure to check that there is no interference with mounting surface caused by the terminal box, motor, DC dimension, etc.

[Reference]
In mounting positions Y3, F3, and G3, the gear case is assembled in a position inverted (i.e., rotated by 180 degrees) relative to the motor, thus the relative position to the mechanical equipment is different from Y1, F1, G1. This also changes the positions of the terminal box, oil filler, etc.
(Refer to page 27).

Hollow shaft Shaft Mount	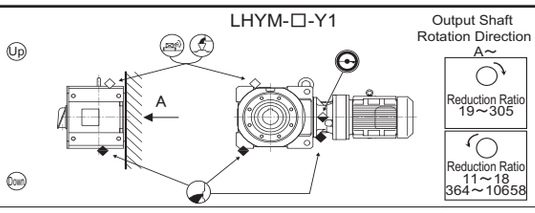	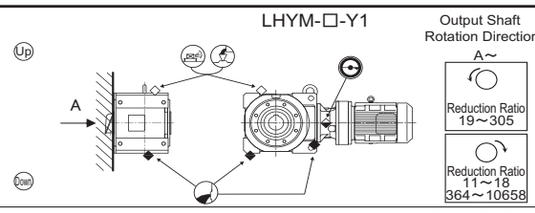
Solid Shaft Case Mount	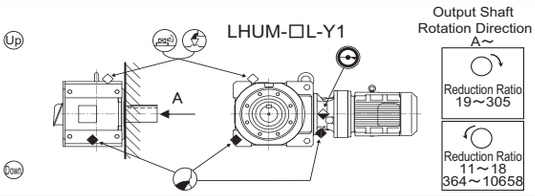	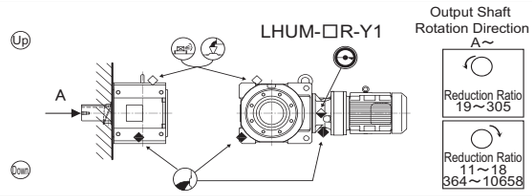
Hollow shaft Flange Mount	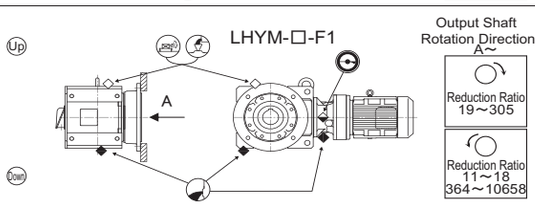	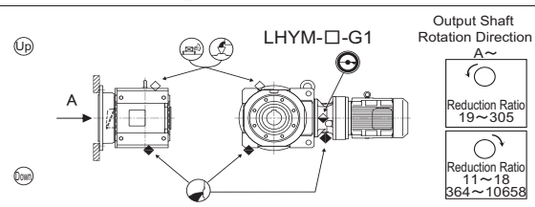
Solid Shaft Flange Mount	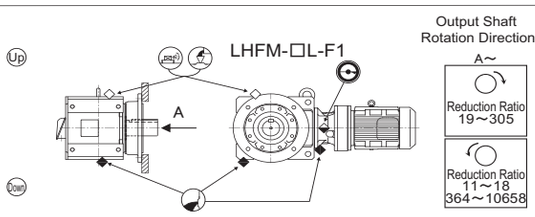	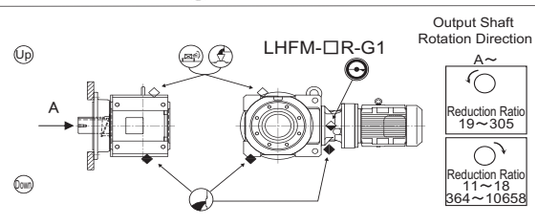
Solid Shaft Foot Mount	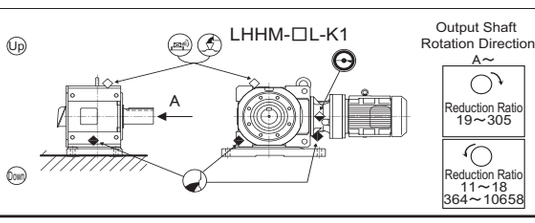	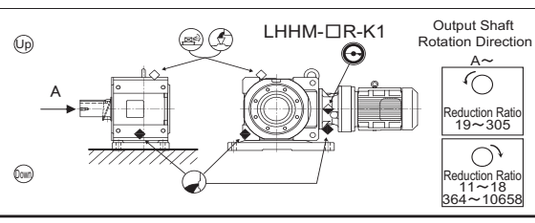

Notes: 1. The motor rotation direction shown here is for Sumitomo motors with the wiring as shown on pages 261 to 266.
2. The rotation direction of the output shaft (viewed from A) is shown assuming that the rotation direction of the motor or input shaft is counter clockwise when viewed from fan end. If the rotation direction of the motor or input shaft is clockwise, the rotation direction of the output shaft is reversed.
3. The oil gauge location is shown in the drawings above. Be sure to designate the location when making the order if the oil gauge needs to be located on opposite side or both sides.

Marks

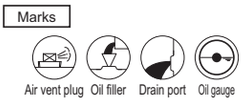

Mounting,Terminal Box Positions and Direction of Rotation

Mounting Positions Y2 F2 G2 V2

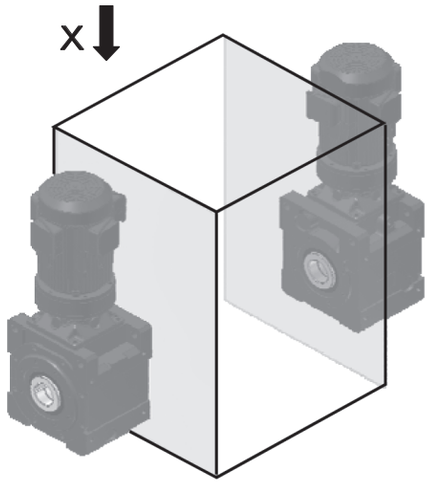

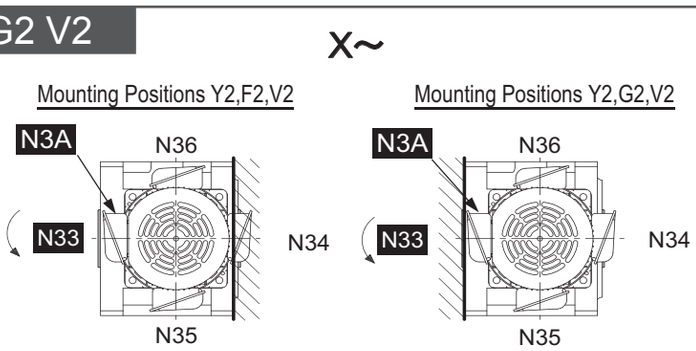

: Rotation direction of motor or input shaft Note 1, 2

: Standard terminal box position and cable port direction

- The standard terminal box position is N33, and the cable port direction is N3A. The terminal box position and the cable port direction can be changed in 90-degree steps. Refer to page 34.

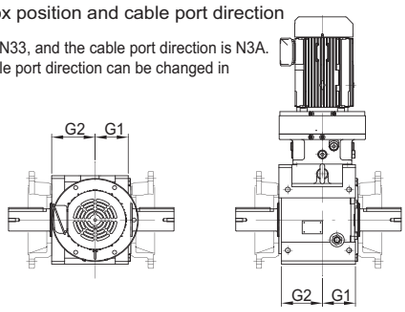

- The centers of the motor and gear case are not aligned (dimension G2 > G1).
- The reducer shape varies with the type. For some types, the motor diameter is larger than the gear case. Be sure to check that there is no interference with mounting surface caused by the terminal box, motor, DC dimension part, etc.

Hollow shaft Shaft Mount	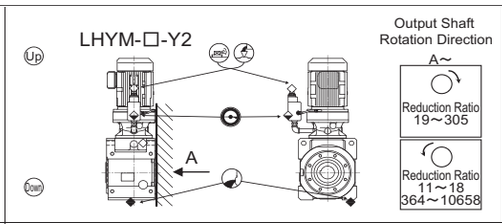	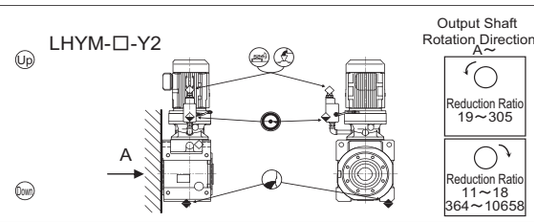
Solid Shaft Case Mount	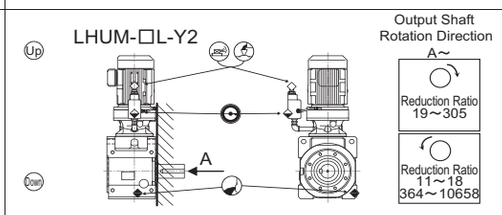	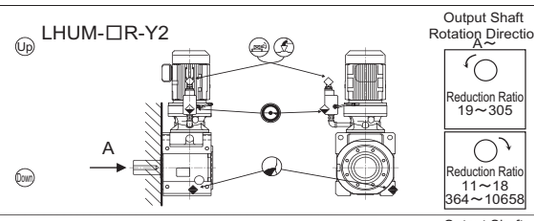
Hollow shaft Flange Mount	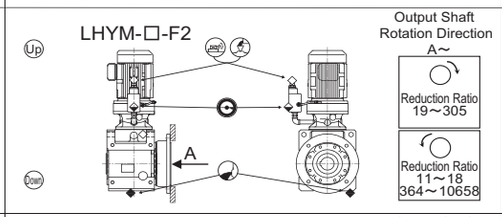	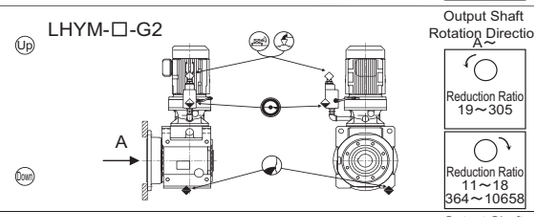
Solid Shaft Flange Mount	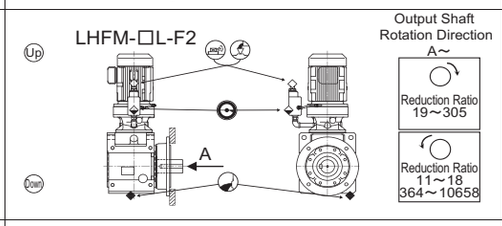	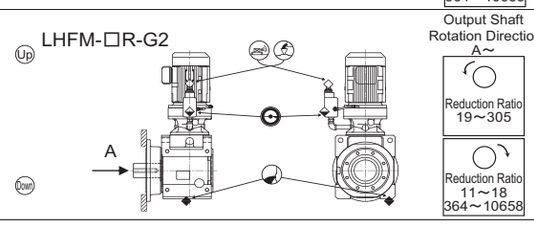
Solid Shaft Foot Mount	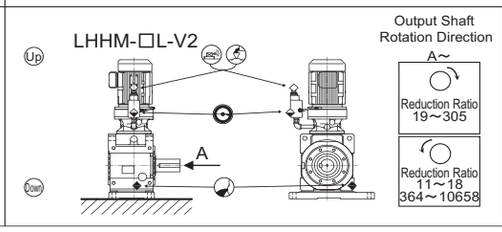	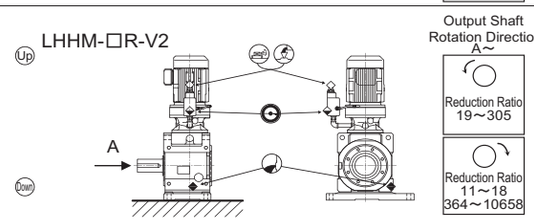

Notes: 1. The motor rotation direction shown here is for Sumitomo motors with the wiring as shown on pages 261 to 266.
2. The rotation direction of the output shaft (viewed from A) is shown assuming that the rotation direction of the motor or input shaft is counter clockwise when viewed from fan end. If the rotation direction of the motor or input shaft is clockwise, the rotation direction of the output shaft is reversed.
3. The oil gauge location is shown in the drawings above. The oil gauge location can be changed in 90 degrees steps in a horizontal direction. In this case, the oil filler, air vent and piping are also changed, because the oil gauge, oil filler and air vent are put on the same piping. Be sure to designate the location when making the order if the oil gauge location needs to be changed.

Marks

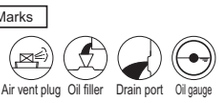

Mounting,Terminal Box Positions and Direction of Rotation

Mounting Positions Y3 G3 F3

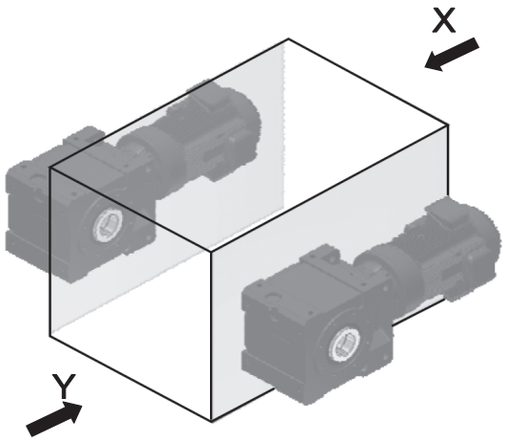

X~

Mounting Positions Y3,F3

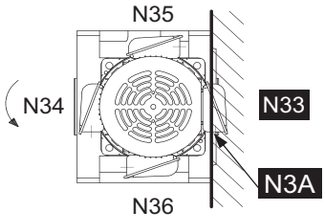

Mounting Positions Y3,G3

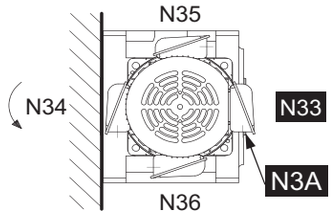

: Rotation direction of motor or input shaft Note 1, 2

: Standard terminal box position and cable port direction

●The standard terminal box position is N33, and the cable port direction is N3A.
The terminal box position and the cable port direction can be changed in 90-degree steps. Refer to page 34.

●The centers of the motor and gear case are not aligned (dimension G2 > G1).
●The reducer shape varies with the type. For some types, the motor diameter is larger than the gear case. Be sure to check that there is no interference with mounting surface caused by the terminal box, motor, DC dimension part, etc.

Y~

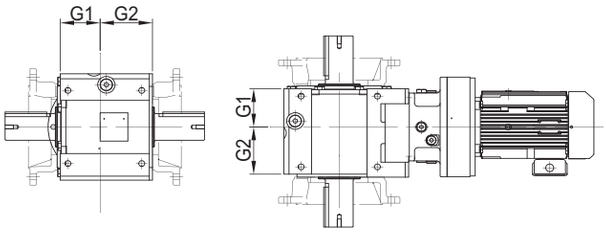

[Reference]
In mounting positions Y1, F1, and G1, the gear case is assembled in a position inverted (i.e., rotated by 180 degrees) relative to the motor, the relative position to the mechanical equipment is different from Y3, F3 and G3. This also changes the positions of the terminal box, oil filler, etc.
(Refer to page 25).

Hollow shaft Shaft Mount	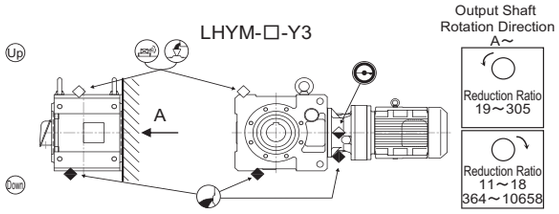	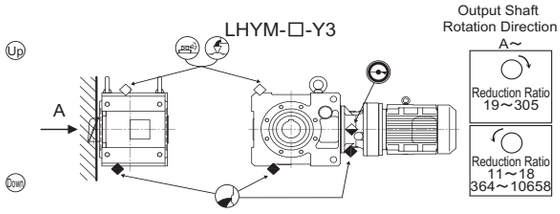
Solid Shaft Case Mount	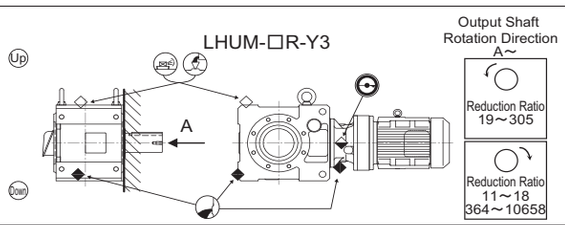	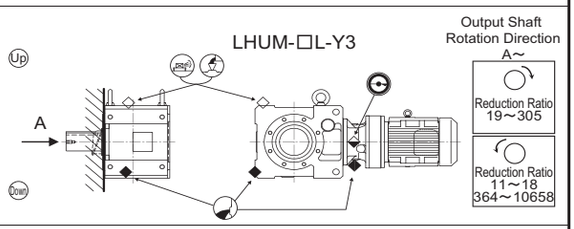
Hollow shaft Flange Mount	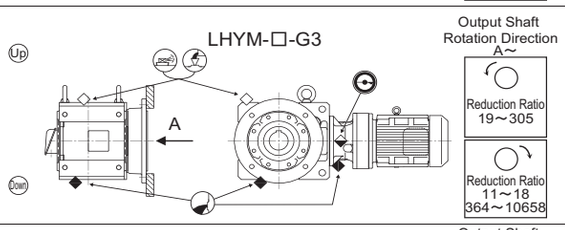	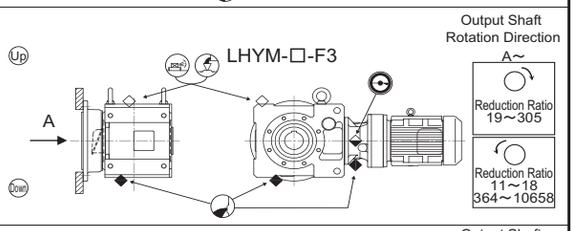
Solid Shaft Flange Mount	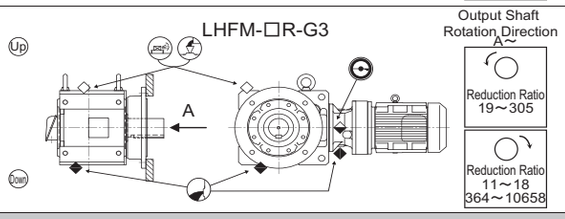	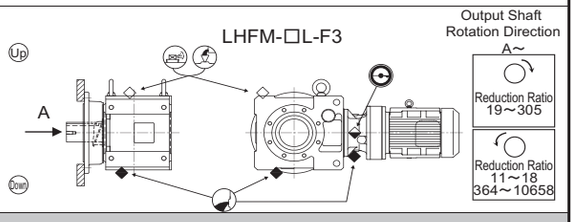
Solid Shaft Foot Mount		

Notes: 1. The motor rotation direction shown here is for Sumitomo motors with the wiring as shown on pages 261 to 266.
2. The rotation direction of the output shaft (viewed from A) is shown assuming that the rotation direction of the motor or input shaft is counter clockwise when viewed from fan end. If the rotation direction of the motor or input shaft is clockwise, the rotation direction of the output shaft is reversed.
3. The oil gauge location is shown in the drawings above. Be sure to designate the location when making the order if the oil gauge needs to be located on opposite side or both sides.

Marks

Mounting,Terminal Box Positions and Direction of Rotation

Mounting Positions Y4 G4 F4

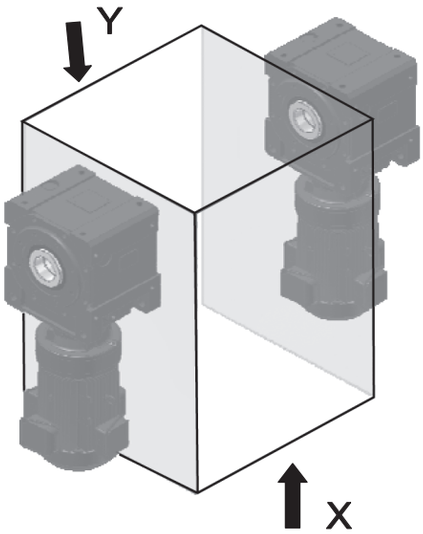

X~

Mounting Positions Y4,G4

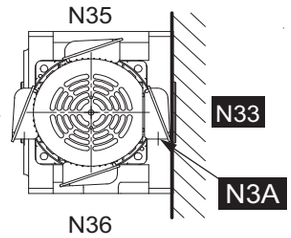

Mounting Positions Y4,F4

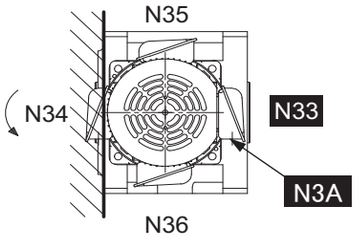

: Rotation direction of motor or input shaft Note 1, 2

: Standard terminal box position and cable port direction

●The standard terminal box position is N33, and the cable port direction is N3A.
The terminal box position and the cable port direction can be changed in 90-degree steps. Refer to page 34.

Y~

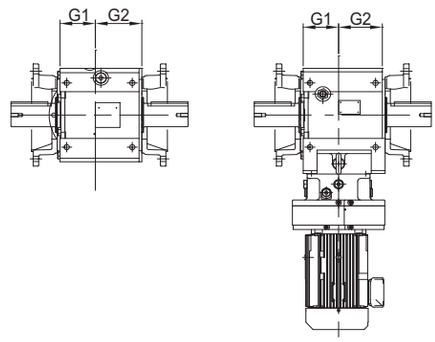

●The centers of the motor and gear case are not aligned (dimension G2 > G1).
●The reducer shape varies with the type. For some types, the motor diameter is larger than the gear case. Be sure to check that there is no interference with mounting surface caused by the terminal box, motor, DC dimension part, etc.

Hollow shaft Shaft Mount	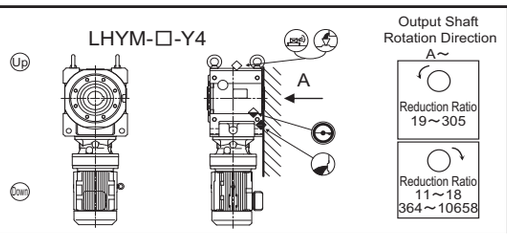	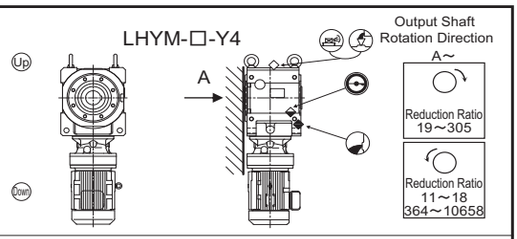
Solid Shaft Case Mount	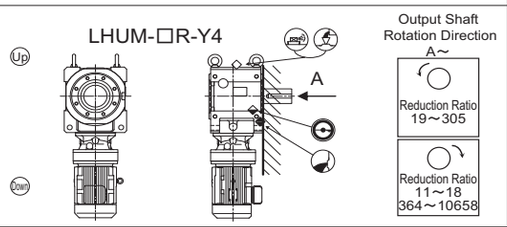	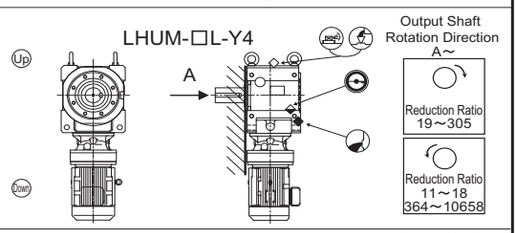
Hollow shaft Flange Mount	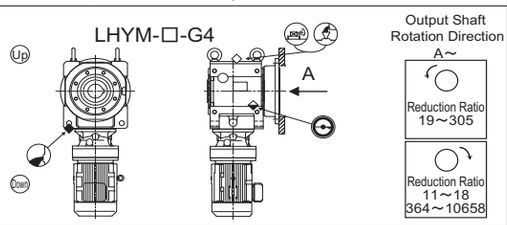	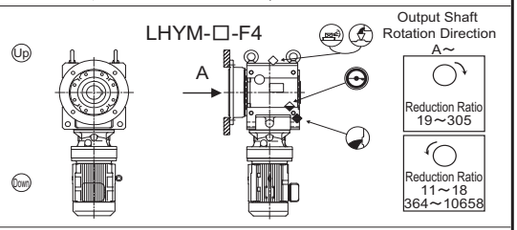
Solid Shaft Flange Mount	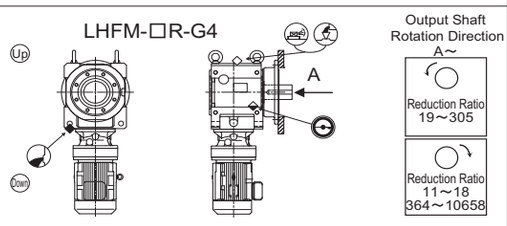	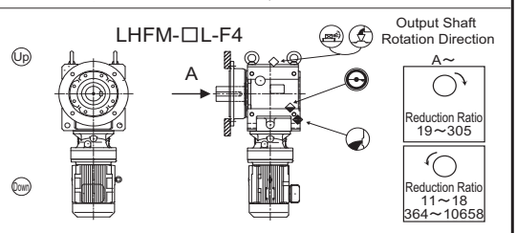

Notes: 1. The motor rotation direction shown here is for with the wiring as shown on pages 261 to 266.
2. The rotation direction of the output shaft (viewed from A) is shown assuming that the rotation direction of the motor or input shaft is counter clockwise when viewed from fan end. If the rotation direction of the motor or input shaft is clockwise, the rotation direction of the output shaft is reversed.
3. The oil gauge location is only as per the drawing above. The opposite side location is not available.

Marks

Mounting,Terminal Box Positions and Direction of Rotation

Mounting Positions Y5 F5 G5

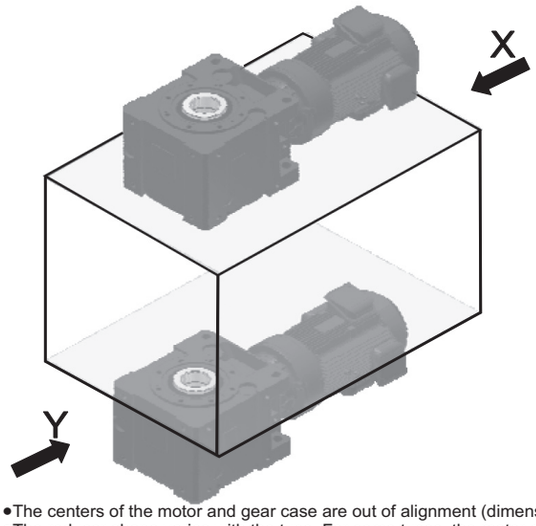

X~

Mounting Positions Y5,F5

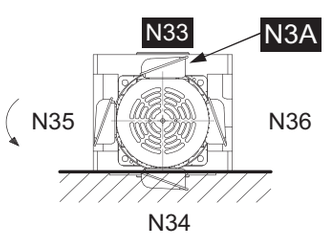

Mounting Positions Y5,G5

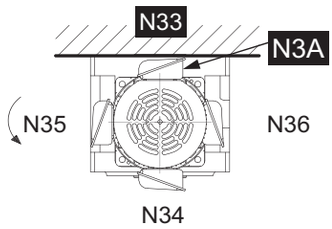

: Rotation direction of motor or input shaft Note 1, 2

: Standard terminal box position and cable port direction

- The standard terminal box position is N33, and the cable port direction is N3A.
  The terminal box position and the cable port direction can be changed in 90-degree steps. Refer to page 34.

- The centers of the motor and gear case are out of alignment (dimension G2 > G1).
- The reducer shape varies with the type. For some types, the motor diameter is larger than the gear case. Be sure to check that there is no interference with mounting surface caused by the terminal box, motor, DC dimension part, or any other component.

[Reference]
In mounting positions Y6, F6, and G6, the gear case is mounted in a position inverted (i.e., rotated by 180 degrees) relative to the motor, thus the relative position to the mechanical equipment is different from Y5, F5, and G5. This also changes the positions of the terminal box, oil filler, etc.
(Refer to page 30).

Y~

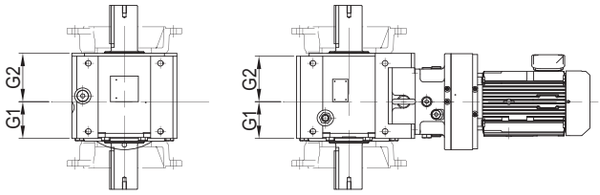

Hollow shaft Shaft Mount	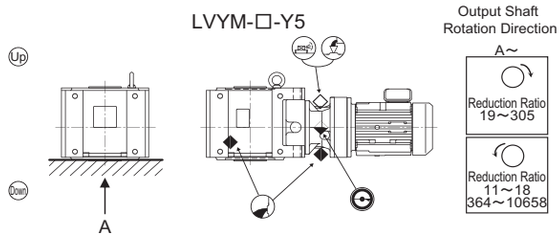	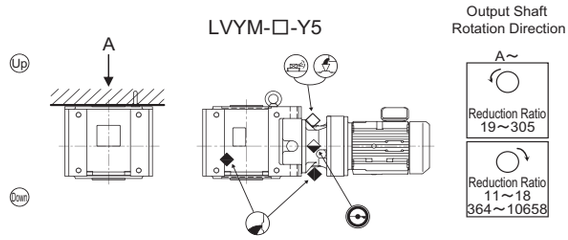
Solid Shaft Case Mount	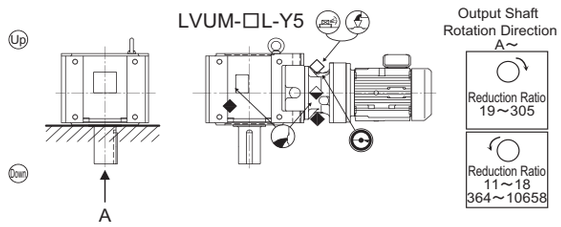	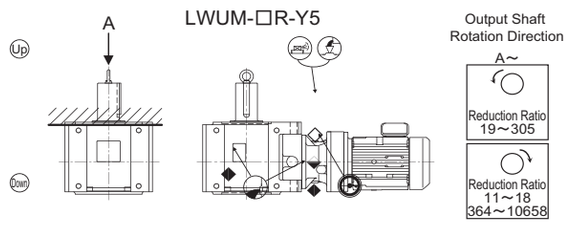
Hollow shaft Flange Mount	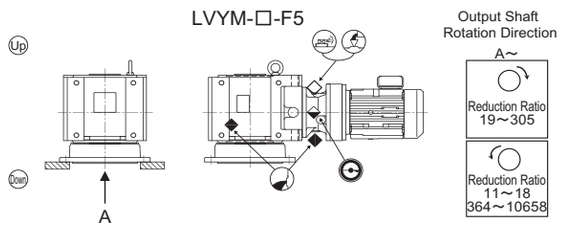	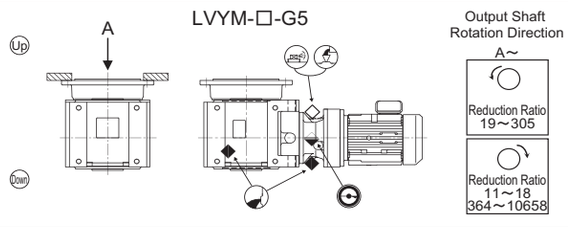
Solid Shaft Flange Mount	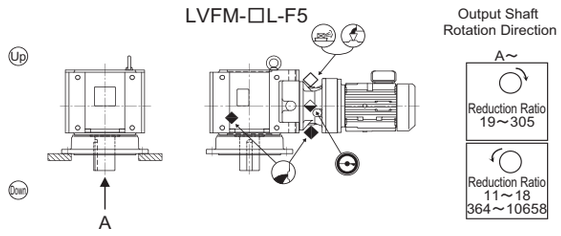	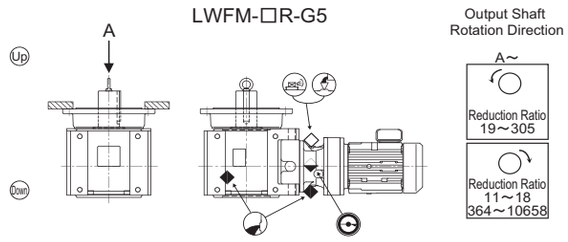

Notes: 1. The motor rotation direction shown here is for Sumitomo motors with the wiring as shown on pages 261 to 266.
2. The rotation direction of the output shaft (viewed from A) is shown assuming that the rotation direction of the motor or input shaft is counter clockwise when viewed from fan end. If the rotation direction of the motor or input shaft is clockwise, the rotation direction of the output shaft is reversed.
3. The oil gauge location is shown in the drawings above. Be sure to designate the location when making the order if the oil gauge needs to be located on opposite side or both sides.

Marks

Mounting,Terminal box Positions and Direction of Rotation

Mounting Positions Y6 F6 G6

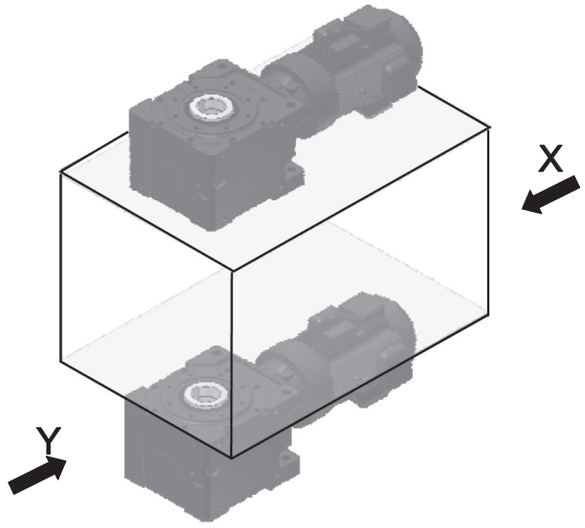

X~

Mounting Positions Y6,F6

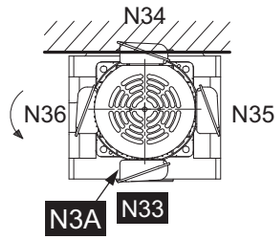

Mounting Positions Y6,G6

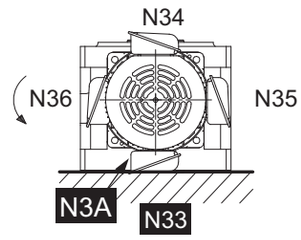

: Rotation direction of motor or input shaft Note 1, 2

: Standard terminal box position and cable port direction

●The standard terminal box position is N33, and the cable port direction is N3A.
The terminal box position and the cable port direction can be changed in 90-degree steps. Refer to page 34.

Y~

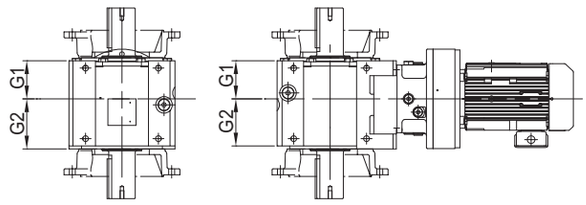

●The centers of the motor and gear case are out of alignment (dimension G2 > G1).
●The reducer shape varies with the type. For some types, the motor diameter is larger than the gear case. Be sure to check that there is no interference with mounting surface caused by the terminal box, motor, DC dimension, etc.

[Reference]
In mounting positions Y5, F5, and G5, the gear case is mounted in a position inverted (i.e., rotated by 180 degrees) relative to the motor, thus the relative position to the mechanical equipment is different from Y6, F6, and G6. This also changes the positions of the terminal box, oil filler, etc.
(Refer to page 29).

Hollow shaft Shaft Mount	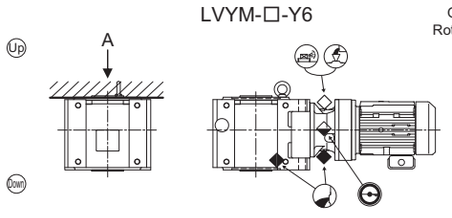	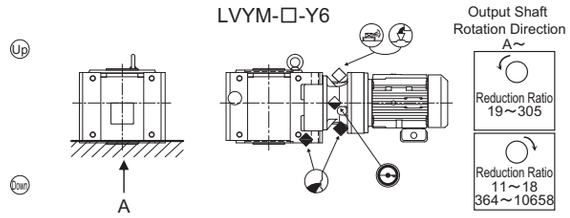
Solid Shaft Case Mount	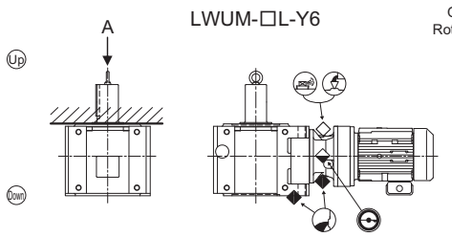	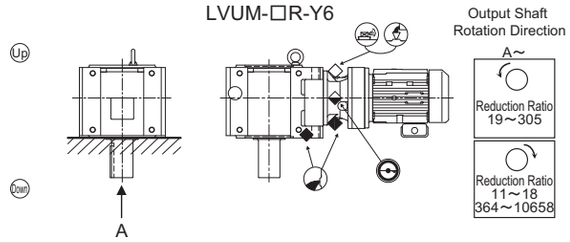
Hollow shaft Flange Mount	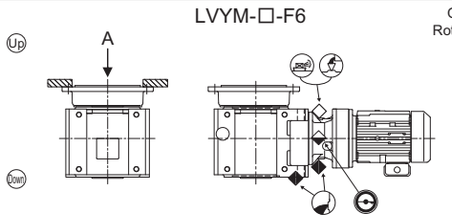	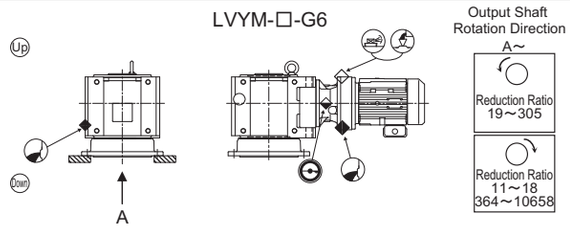
Solid Shaft Flange Mount	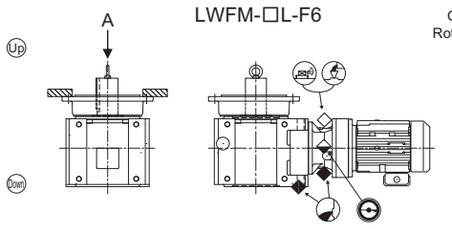	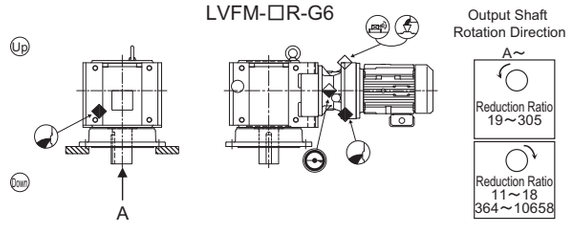

Notes: 1. The motor rotation direction shown here is for Sumitomo motors with the wiring as shown on pages 261 to 266.
2. The rotation direction of the output shaft (viewed from A) is shown assuming that the rotation direction of the motor or input shaft is counter clockwise when viewed from fan end. If the rotation direction of the motor or input shaft is clockwise, the rotation direction of the output shaft is reversed.
3. The oil gauge location is shown in the drawings above. Be sure to designate the location when making the order if the oil gauge needs to be located on opposite side or both sides.

Marks

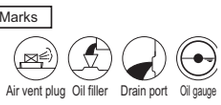

Mounting,Terminal box Positions and Direction of Rotation

Wall and Ceiling Mount Types (W3, V1, K3, V3,K2, W2, K4, W4)

These are wall mount type reducers which are mounted on wall or ceiling in horizontal or upside-down posture.
The positions of the lubrication-related parts are matched with each mount type. Consult us if you desire a reducer conforming to this specification.

■ Applicable models

Wall/Ceiling Mount Type [1]

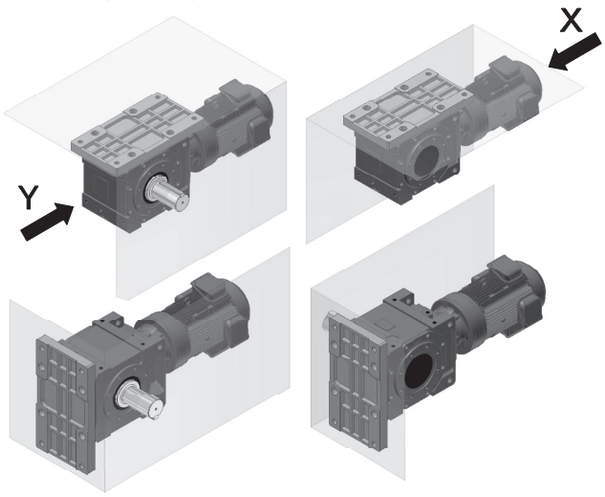

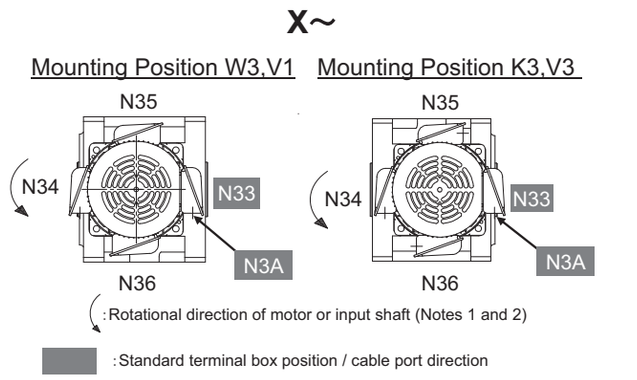

- The terminal box position of the standard reducer is N33, and the cable port direction is N3A. Their directions can be changed in 90-degree steps. Refer to page 34.

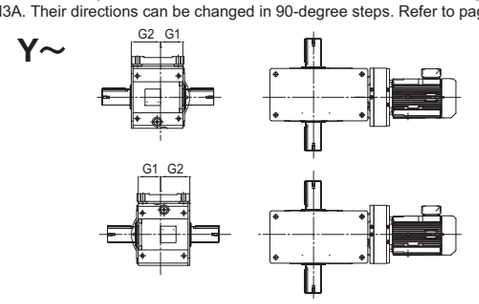

- The centers of the motor and gear case are not aligned (dimension G2 > G1).
- The reducer shape varies with model. For some models, the motor diameter is larger than the gear case. Be sure to check that there is no interference with mounting surface caused by the terminal box, motor, DC dimension part, or any other component.

[Reference]
For mount positions K3 and V3, the gear case is assembled in the position rotated 180 degrees relative to W3 and V1, thus its relative position differs from that of the mechanical equipment. In addition, the positions of the terminal box, oil filler, etc. also differ from those of the mechanical equipment.

Solid shaft foot mount

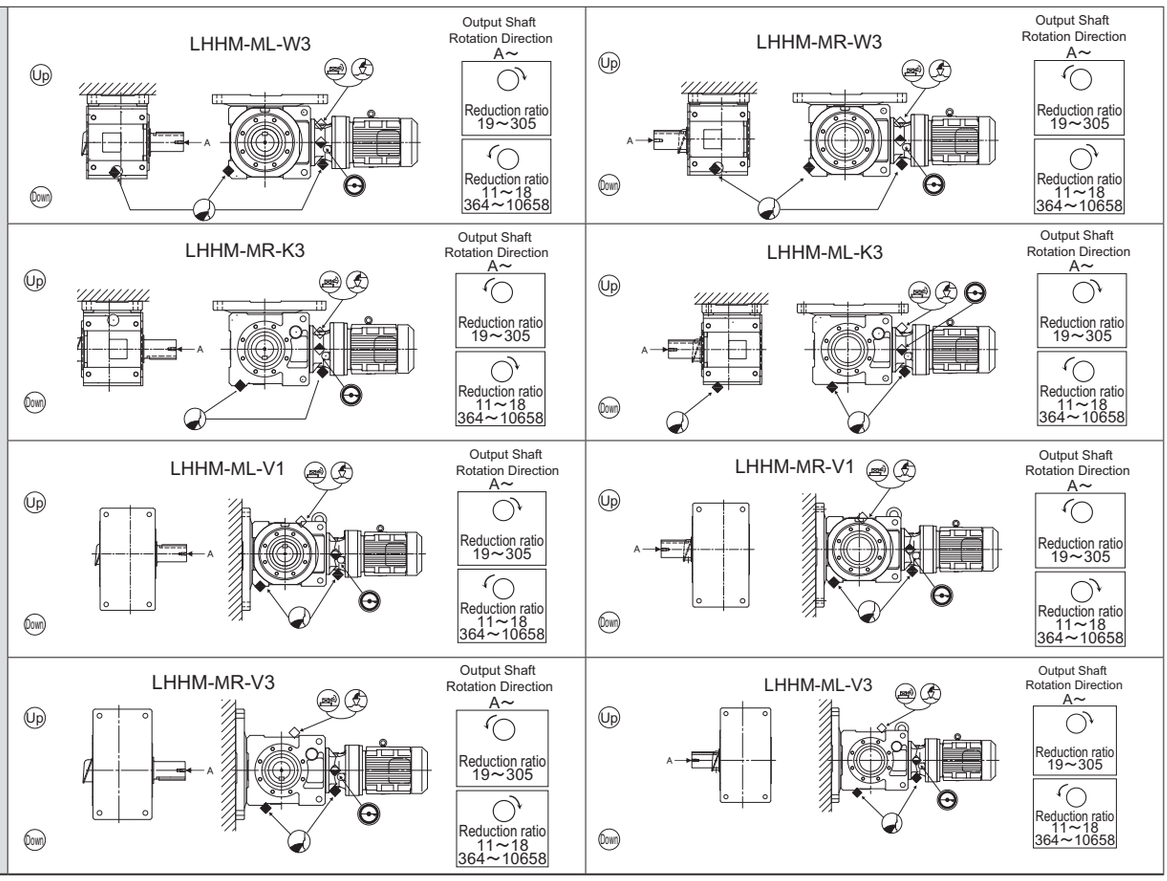

Note: 1. The motor's rotational direction is for those Sumitomo motors that have a wiring shown on pages 261 to 266.
2. Each of the above drawings shows the output shaft's rotational direction (viewed from A) assuming that the motor's or input shaft's rotational direction is counter clockwise when viewed from fan end.
If the motors or input shafts rotational direction is counterclockwise, the output shafts rotational direction is reversed.
3. The oil gauge location is shown in the drawings above. Be sure to designate the location when making the order if the oil gauge needs to be located on opposite side or both sides.

Marks

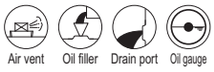

Mounting,Terminal box Positions and Direction of Rotation

Wall Mount Type [2]

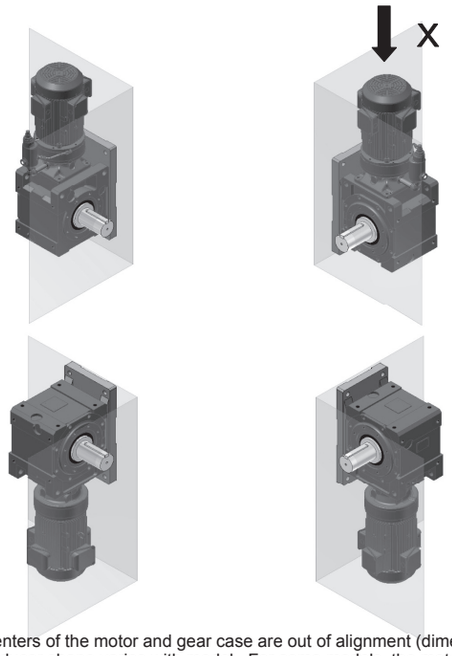

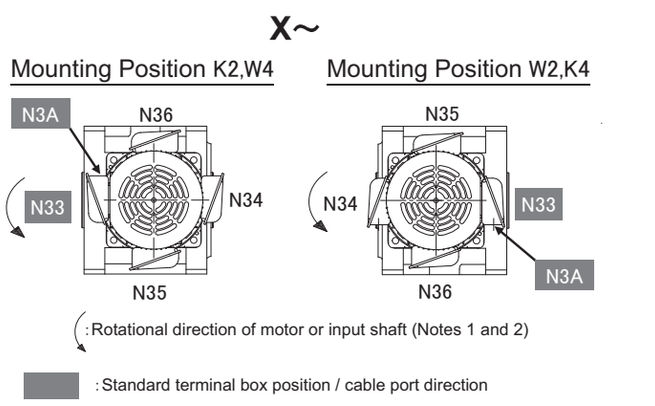

- The terminal box position of the standard reducer is N33, and the cable port direction is N3A. Their directions can be changed in 90-degree steps. Refer to page 34.

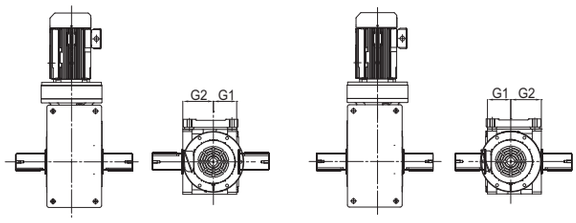

- The centers of the motor and gear case are out of alignment (dimension G2 > G1).
- The reducer shape varies with model. For some models, the motor diameter is larger than the gear case. Be sure to check that there is no interference with mounting surface caused by the terminal box, motor, DC dimension part, or any other component.

[Reference]
For mount positions W2 and K4, the gear case is assembled in the position rotated 180 degrees relative to K2 and W4, thus its relative position differs from that of the mechanical equipment.
In addition, the positions of the terminal box, oil filler, etc. also differ from those of the mechanical equipment.

Solid shaft foot mount	LHHM-ML-K2 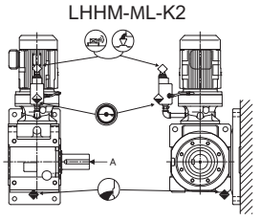 Output Shaft Rotation Direction A~ Reduction ratio 19～305 Reduction ratio 11～18 364～10658	LHHM-MR-K2 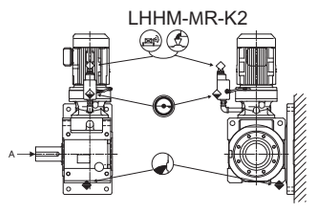 Output Shaft Rotation Direction A~ Reduction ratio 19～305 Reduction ratio 11～18 364～10658
	LHHM-MR-W2 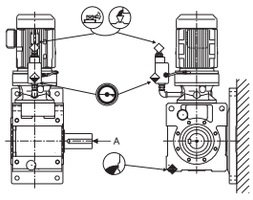 Output Shaft Rotation Direction A~ Reduction ratio 19～305 Reduction ratio 11～18 364～10658	LHHM-ML-W2 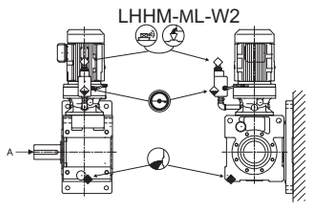 Output Shaft Rotation Direction A~ Reduction ratio 19～305 Reduction ratio 11～18 364～10658
	LHHM-ML-W4 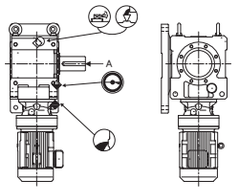 Output Shaft Rotation Direction A~ Reduction ratio 19～305 Reduction ratio 11～18 364～10658	LHHM-ML-K4 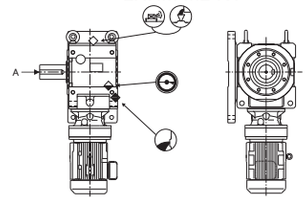 Output Shaft Rotation Direction A~ Reduction ratio 19～305 Reduction ratio 11～18 364～10658

Note: 1. The motor's rotational direction is for those Sumitomo motors that have a wiring shown on pages 261 to 266.
2. Each of the above drawings shows the output shaft's rotational direction (viewed from A) assuming that the motor's or input shaft's rotational direction is counter clockwise when viewed from fan end.
If the motor's or input shaft's rotational direction is clockwise, the output shaft's rotational direction is reversed.
3. The oil gauge location is shown in the drawings above. The oil gauge location can be changed in 90 degrees steps in a horizontal direction in case of mounting position K2 and W2. In this case, the oil filler, air vent and piping are also changed, because the oil gauge, oil filler and air vent are put on the same piping. Be sure to designate the location when making the order if the oil gauge location needs to be changed. In case of mounting position W4 and K4, the oil gauge location can not be changed.

Marks

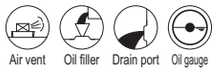

Mounting,Terminal box Positions and Direction of Rotation

Wall Mount Type [3]

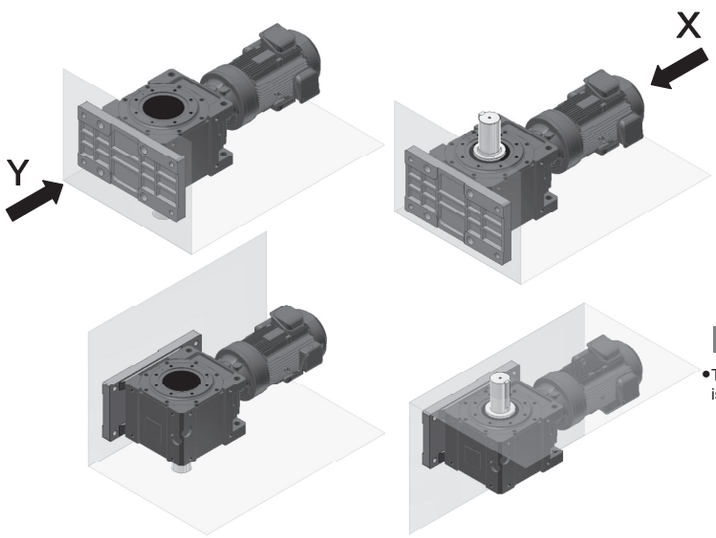

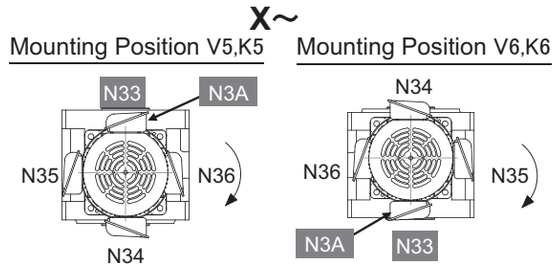

: Rotational direction of motor or input shaft (Notes 1 and 2)

: Standard terminal box position / cable port direction

- The terminal box position of the standard reducer is N33, and the cable port direction is N3A. Their directions can be changed in 90-degree steps. Refer to page 34.

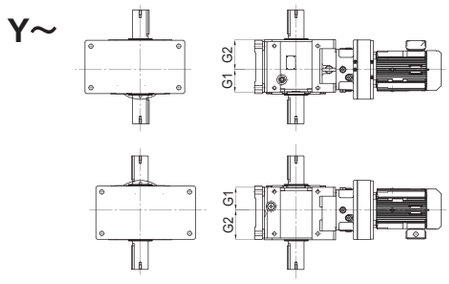

- The centers of the motor and gear case are not aligned (dimension G2 > G1).
- The reducer shape varies with model. For some models, the motor diameter is larger than the gear case. Be sure to check that there is not any interference with mounting surface caused by the terminal box, motor, DC dimension part, or any other component.

[Reference]
For mount positions V6 and K6, the gear case is assembled in the position rotated 180 degrees relative to V5 and K5, thus its relative position differs from that of the mechanical equipment. In addition, the positions of the terminal box, oil filler, etc. also differ from those of the mechanical equipment.

Solid shaft foot mount	LVHM-ML-V5	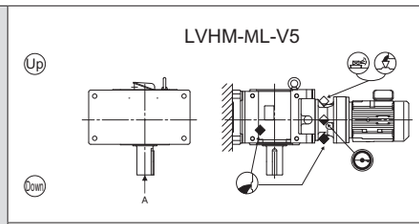
	LWHM-MR-V5	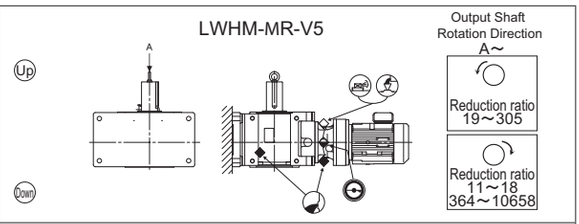
	LVHM-MR-V6	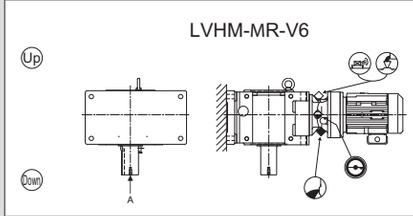
	LWHM-ML-V6	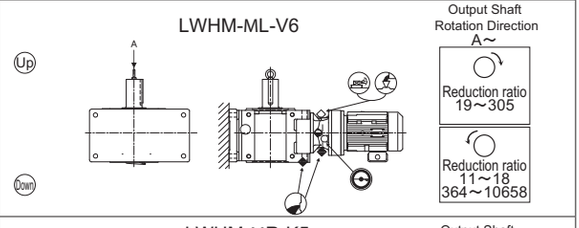
	LVHM-ML-K5	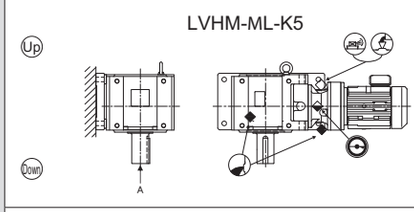
	LWHM-MR-K5	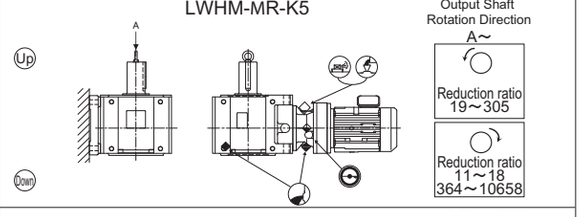
	LVHM-MR-K6	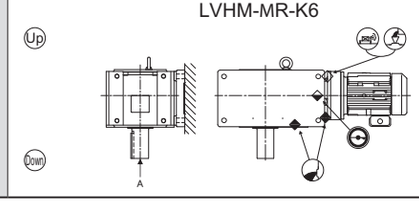
	LWHM-ML-K6	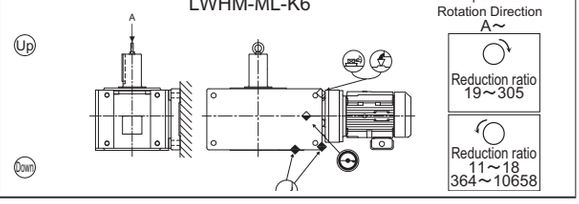

Note: 1. The motor's rotational direction is for those Sumitomo motors that have a wiring shown on pages 261 to 266.
2. Each of the above drawings shows the output shaft's rotational direction (viewed from A) assuming that the motor's or input shaft's rotational direction is counter clockwise.
If the motor's or input shaft's rotational direction is clockwise, the output shaft's rotational direction is reversed.
3. The oil gauge location is shown in the drawings above. Be sure to designate the location when making the order if the oil gauge needs to be located on opposite side or both sides.

Marks

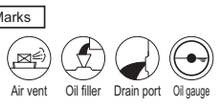

Terminal Box and Cable Port

The terminal box position or cable port direction of the motor can be selected in 90-degree steps relative to the standard position or direction. Designate the position or direction when making the order.
(The terminal box position cannot be changed after shipment. Be sure to designate it when making the order.)

Symbol		Terminal box position (viewed from the output shaft when the motor is horizontally located)			
		N33	N34	N35	N36
Cable Port Direction	N3A	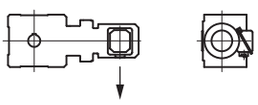	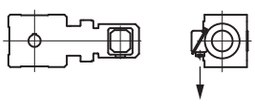	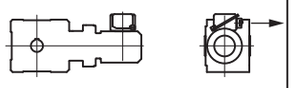	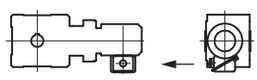
	N3B	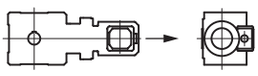	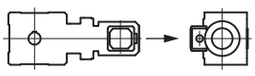	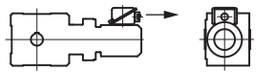	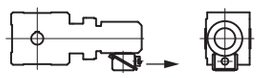
	N3C	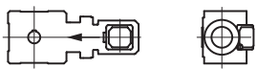	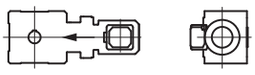	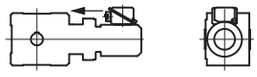	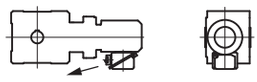
	N3D	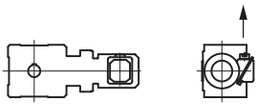	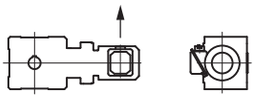	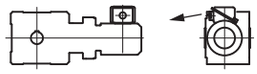	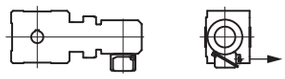

● ↓ indicates the cable port direction.

Combinations of Terminal Box Positions and Cable Port Directions

Mounting Position / Item to Designate	○ 1	○ 2	○ 3	○ 4	○ 5	○ 6
Mounting Position	N33	N33	N33	N33	N33	N33
Cable Port Direction	N3A	N3A	N3A	N3A	N3A	N3A
Mounting Position	N34	N34	N34	N34	N34	N34
Cable Port Direction	N3A	N3A	N3A	N3A	N3A	N3A
Mounting Position	N35	N35	N35	N35	N35	N35
Cable Port Direction	N3A	N3A	N3A	N3A	N3D	N3A
Mounting Position	N36	N36	N36	N36	N36	N36
Cable Port Direction	N3A	N3A	N3A	N3A	N3A	N3D

: Standard terminal box position or cable port direction
: Semi-standard terminal box position or cable port direction

Although the semi-standard combinations are defined as above, other combinations of terminal box positions and cable port directions are also available.

Allowable Maximum Output Torque

Frame size \ Reduction Ratio	11	13	14	16	18	21	22	25	28	35	39	46	53	60
4A100	290	353	386	442	483	580			849	776	849	849	849	849
	29.6	36.0	39.3	45.1	49.2	59.1			86.5	79.1	86.5	86.5	86.5	86.5
4A105	290	353	386	442	483	580			938	955	1050	1020	1020	1020
	29.6	36.0	39.3	45.1	49.2	59.1			95.6	97.3	107	104	104	104
4A110						657			1220	1120	1220	1220	1220	1220
						67.0			124	114	124	124	124	124
4A115						657			1290	1290	1290	1290	1290	1290
						67.0			131	131	131	131	131	131
4A120	934	1140	1250	1290	1290	1240	1290	1290	1290	1290	1290	1290	1290	1290
	95.2	116	127	131	131	126	131	131	131	131	131	131	131	131
4A125	934	1140	1250	1290	1290	1240	1290	1290	1290	1290	1290	1290	1290	1290
	95.2	116	127	131	131	126	131	131	131	131	131	131	131	131
4A140	1290	1290	1290	1290	1290	1290	1290	1290	1290	1290	1290	1290	1290	1290
	131	131	131	131	131	131	131	131	131	131	131	131	131	131
4A145	1290	1290	1290	1290	1290	1290	1290	1290	1290	1290	1290	1290	1290	1290
	131	131	131	131	131	131	131	131	131	131	131	131	131	131
4B120	934	1140	1250	1420	1560	1240	1610	1760	1780	1630	1780	1780	1780	1770
	95.2	116	127	145	159	126	164	179	181	166	181	181	181	180
4B125	934	1140	1250	1420	1560	1240	1610	1760	1950	1930	2110	2140	2140	2140
	95.2	116	127	145	159	126	164	179	199	197	215	218	218	218
4B140	1460	1780	1950	2230	2440	2440	2570	2570	2570	2570	2570	2570	2570	2570
	149	181	199	227	249	249	262	262	262	262	262	262	262	262
4B145	1460	1780	1950	2230	2440	2440	2570	2570	2570	2570	2570	2570	2570	2570
	149	181	199	227	249	249	262	262	262	262	262	262	262	262
4B160	1850	2250	2470	2570	2570	2570	2570	2570	2570	2570	2570	2570	2570	2570
	189	229	252	262	262	262	262	262	262	262	262	262	262	262
4B165	1850	2250	2470	2570	2570	2570	2570	2570	2570	2570	2570	2570	2570	2570
	189	229	252	262	262	262	262	262	262	262	262	262	262	262
4C140	1460	1780	1950	2230	2440	2440	3120	3140	3900	3800	4160	4160	4160	4160
	149	181	199	227	249	249	318	348	398	387	424	424	424	424
4C145	1460	1780	1950	2230	2440	2440	3120	3410	3900	4010	4390	4650	4610	4650
	149	181	199	227	249	249	318	348	398	409	448	474	470	474
4C160	3260	3980	4350	4970	5140	4500	4900	5140	5140	5140	5140	5140	5140	5140
	332	406	443	507	524	459	499	524	524	524	524	524	524	524
4C165	3260	3980	4350	4970	5140	4500	4900	5140	5140	5140	5140	5140	5140	5140
	332	406	443	507	524	459	499	524	524	524	524	524	524	524
4C170	3980	4850	4900	5140	4960	4590	4900	5140	5140	5140	5140	5140	5140	5140
	406	494	499	524	506	468	499	524	524	524	524	524	524	524
4C175	3980	4850	4900	5140	4960	4590	4900	5140	5140	5140	5140	5140	5140	5140
	406	494	499	524	506	468	499	524	524	524	524	524	524	524
4D160	3260	3980	4350	4970	5440	4500	5450	5960	5960	5450	5960	5960	5960	5960
	332	406	443	507	555	459	556	608	608	556	608	608	608	608
4D165	3260	3980	4350	4970	5440	4500	5610	6140	6340	6520	7130	7130	7130	7130
	332	406	443	507	555	459	572	626	646	665	727	727	727	727
4D170	3980	4850	5300	6060	6630	6310	7860	8590	8590	7860	8590	8580	8590	8590
	406	494	540	618	676	643	801	876	876	801	876	875	876	876
4D175	3980	4850	4900	5140	4960	4590	4900	5140	5140	5140	5140	5140	5140	5140
	406	494	499	524	506	468	499	524	524	524	524	524	524	524
4D180	5270	6420	7030	8030	8780	7950	7530	8240	8380	8720	8720	8720	8720	8720
	537	654	717	819	895	810	768	840	854	889	889	889	889	889
4D185	5270	6420	7030	8030	8780	8060	7650	8370	8480	8720	8720	8720	8720	8720
	537	654	717	819	895	822	780	853	864	889	889	889	889	889
4E170	3980	4850	5300	6060	6630	6310	7860	8590	8590	7860	8590	8580	8590	8590
	406	494	540	618	676	643	801	876	876	801	876	875	876	876
4E175	3980	4850	5300	6060	6630	6310	8470	9260	8840	9780	9830	9830	9830	9830
	406	494	540	618	676	643	863	944	901	997	1000	1000	1000	1000
4E180	5270	6420	7030	8030	8780	7950	7530	8240	8380	9830	9830	9830	9830	9830
	537	654	717	819	895	810	768	840	854	1000	1000	1000	1000	1000
4E185	5270	6420	7030	8030	8780	8060	7650	8370	8480	9830	9830	9830	9830	9830
	537	654	717	819	895	822	780	853	864	1000	1000	1000	1000	1000
4E190	9830	9830	9830	12300	12200	9830	9350	9830	9830	9830	9830	9830	9830	9830
	1000	1000	1000	1250	1240	1000	953	1000	1000	1000	1000	1000	1000	1000
4E195	9830	9830	9830	12300	12200	9830	9550	9830	9830	9830	9830	9830	9830	9830
	1000	1000	1000	1250	1240	1000	973	1000	1000	1000	1000	1000	1000	1000
4F180	5270	6420	7030	8030	8780	7950	7530	8240	8380	12600	13800	13800	13800	13800
	537	654	717	819	895	810	768	840	854	1280	1410	1410	1410	1410
4F185	5270	6420	7030	8030	8780	8060	7650	8370	8480	14900	16300	16700	16700	17000
	537	654	717	819	895	822	780	853	864	1520	1660	1700	1700	1730
4F190	11000	12500	14300	15600	17000	9950	9350	10200	10400	18000	17400	17400	17400	17400
	1120	1270	1460	1590	1730	1010	953	1040	1060	1830	1770	1770	1770	1770
4F195	11000	12500	14300	15600	17000	10100	9550	10400	10600	18000	17400	17400	17400	17400
	1120	1270	1460	1590	1730	1030	973	1060	1080	1830	1770	1770	1770	1770

Notes: 1. This table lists the mechanical rated torque of Bevel BUDDYBOX, i.e., the allowable values of the peak torque that is applied to the output shaft, for example during startup, stop etc. For torque values during normal operation, please refer to the selection tables.
2. Consult us for the values for reduction ratio not shown in the above table and for ratio more than 305.

Allowable Maximum Output Torque

Unit:Upper row: N · m
Lower row: kgf · m

Frame size \ Reduction Ratio	67	74	80	88	102	112	123	151	179	207	249	305
4A100	776	849	776	849	849	776	849	849	849	849	849	849
	79.1	86.5	79.1	86.5	86.5	79.1	86.5	86.5	86.5	86.5	86.5	86.5
4A105	932	1020	932	1020	1020	932	1020	1020	1010	1010	897	1020
	95	104	95	104	104	95	104	104	103	103	91.4	104
4A110	1120	1220	1120	1220	1220	1120	1220	1220	1220	1220	1220	1220
	114	124	114	124	124	114	124	124	124	124	124	124
4A115	1290	1290	1290	1290	1290	1290	1290	1290	1290	1290	1290	1290
	131	131	131	131	131	131	131	131	131	131	131	131
4A120	1290	1290	1290	1290	1290	1290	1290	1290	1290	1290	1290	1290
	131	131	131	131	131	131	131	131	131	131	131	131
4A125	1290	1290	1290	1290	1290	1290	1290	1290	1290	1290	1290	1290
	131	131	131	131	131	131	131	131	131	131	131	131
4A140	1290	1290	1290	1290	1290	1290	1290	1290	1290	1290	1290	1290
	131	131	131	131	131	131	131	131	131	131	131	131
4A145	1290	1290	1290	1290	1290	1290	1290	1290	1290	1290	1290	1290
	131	131	131	131	131	131	131	131	131	131	131	131
4B120	1620	1770	1630	1780	1770	1630	1780	1780	1780	1780	1780	1780
	165	180	166	181	180	166	181	181	181	181	181	181
4B125	1960	2140	1960	2140	2140	1960	2140	2140	2140	2140	2010	2140
	200	218	200	218	218	200	218	218	218	218	205	218
4B140	2570	2570	2570	2570	2570	2570	2570	2570	2570	2570	2570	2570
	262	262	262	262	262	262	262	262	262	262	262	262
4B145	2570	2570	2570	2570	2570	2570	2570	2570	2570	2570	2570	2570
	262	262	262	262	262	262	262	262	262	262	262	262
4B160	2570	2570	2570	2570	2570	2570	2570	2570	2570	2570	2570	2570
	262	262	262	262	262	262	262	262	262	262	262	262
4B165	2570	2570	2570	2570	2570	2570	2570	2570	2570	2570	2570	2570
	262	262	262	262	262	262	262	262	262	262	262	262
4C140	3800	4160	3800	4160	4160	3800	4160	4160	4160	4160	4160	4160
	387	424	387	424	424	387	424	424	424	424	424	424
4C145	4160	4550	4250	4650	4650	4250	4650	4650	4650	4650	4500	4240
	424	464	433	474	474	433	474	474	474	474	459	432
4C160	5140	5140	5140	5140	5140	5140	5140	5140	5140	5140	5140	5140
	524	524	524	524	524	524	524	524	524	524	524	524
4C165	5140	5140	5140	5140	5140	5140	5140	5140	5140	5140	5140	5140
	524	524	524	524	524	524	524	524	524	524	524	524
4C170	5140	5140	5140	5140	5140	5140	5140	5140	5140	5140	5140	5140
	524	524	524	524	524	524	524	524	524	524	524	524
4C175	5140	5140	5140	5140	5140	5140	5140	5140	5140	5140	5140	5140
	524	524	524	524	524	524	524	524	524	524	524	524
4D160	5450	5960	5450	5960	5960	5450	5960	5890	5960	5960	5960	5960
	556	608	556	608	608	556	608	600	608	608	608	608
4D165	6520	7130	6520	7130	7130	6520	7130	7130	7130	7130	7130	6970
	665	727	665	727	727	665	727	727	727	727	727	710
4D170	7860	8590	7860	8590	8590	7860	8590	8590	8590	8590	8590	8590
	801	876	801	876	876	801	876	876	876	876	876	876
4D175	5140	5140	5140	5140	5140	5140	5140	5140	5140	5140	5140	5140
	524	524	524	524	524	524	524	524	524	524	524	524
4D180	8720	8720	8720	8720	8720	8720	8720	8720	8720	8720	8720	8720
	889	889	889	889	889	889	889	889	889	889	889	889
4D185	8720	8720	8720	8720	8720	8720	8720	8720	8720	8720	8720	8720
	889	889	889	889	889	889	889	889	889	889	889	889
4E170	7860	8590	7860	8590	8590	7860	8590	8590	8590	8590	8590	8590
	801	876	801	876	876	801	876	876	876	876	876	876
4E175	9780	9830	9780	9830	9830	9780	10700	10700	10700	10700	10700	10700
	997	1000	997	1000	1000	997	1090	1090	1090	1090	1090	1090
4E180	9830	9830	9830	9830	9830	11600	11600	11600	11600	11600	11600	11600
	1000	1000	1000	1000	1000	1180	1180	1180	1180	1180	1180	1180
4E185	9830	9830	9830	9830	9830	11600	11600	11600	11600	11600	11600	11600
	1000	1000	1000	1000	1000	1180	1180	1180	1180	1180	1180	1180
4E190	9830	9830	9830	9830	9830	11600	11600	11600	11600	11600	11600	11600
	1000	1000	1000	1000	1000	1180	1180	1180	1180	1180	1180	1180
4E195	9830	9830	9830	9830	9830	11600	11600	11600	11600	11600	11600	11600
	1000	1000	1000	1000	1000	1180	1180	1180	1180	1180	1180	1180
4F180	12500	13700	12600	13800	13800	12600	13800	13800	13800	13700	13700	13800
	1270	1400	1280	1410	1410	1280	1410	1410	1410	1400	1400	1410
4F185	15500	17000	15500	16900	17000	15500	17000	17000	17000	17000	15300	17000
	1580	1730	1580	1720	1730	1580	1730	1730	1730	1730	1560	1730
4F190	18000	17400	18000	17400	17400	18000	17400	17400	17400	17400	17400	17400
	1830	1770	1830	1770	1770	1830	1770	1770	1770	1770	1770	1770
4F195	18000	17400	18000	17400	17400	18000	17400	17400	17400	17400	17400	17400
	1830	1770	1830	1770	1770	1830	1770	1770	1770	1770	1770	1770

Notes: 1. This table lists the mechanical rated torque of Bevel BUDDYBOX, i.e., the allowable values of the peak torque that is applied to the output shaft, for example during startup, stop etc. For torque values during normal operation, please refer to the selection tables.
2. Consult us for the values for reduction ratio not shown in the above table and for ratio more than 305.

Allowable Radial and Axial Load

Neither the radial nor axial load must exceed the allowable range when a gear or pulley is coupled with Bevel BUDDYBOX® reducer.

1. Output Shaft Radial and Axial Load

Check the radial and axial load on the output shaft using formulas 1 to 3 below:

1 Radial load Pr

$$Pr = \frac{T\ell}{R} \leqq \frac{Pro}{Cf \cdot Fs} \quad [N, kgf]$$

2 Axial load Pa

$$Pa \leqq \frac{Pao}{Cf \cdot Fs} \quad [N, kgf]$$

3 When radial and axial load co-exist:

$$\left(\frac{Pr}{Pro} + \frac{Pa}{Pao} \right) \cdot Cf \cdot Fs \leqq 1$$

Pr : Actual radial load [N, kgf]
Tℓ : Actual transmitted torque [N·m, kgf·m] on the output shaft of the reducer
R : Pitch circle radius [m] of sprocket, gear, pulley, etc.
Pro : Allowable radial load [N, kgf] (refer to Selection Table or Tables 20 and 21)
Pa : Actual axial load [N, kgf]
Pao: Allowable axial load [N, kgf] (Table 22)
Cf : Coupling factor (Table 18)
Fs : Shock factor (Table 19)

●When the radial load exceeds the allowable value, reselect with a larger frame size.
●Consult us when using for application with extremely high startup frequency.

Table 18 Coupling Factor Cf

Coupling Method	Cf
Chain	1
Gears	1.25
V-Belt	1.5

Table 19 Shock Factor Fs

Degree of Shock	Fs
Practically no shock	1
Light shock	1~1.2
Severe shock	1.4~1.6

Calculate the detailed intermediate values listed in Tables 20 to 21 by using the interpolation method.

[Example of Calculating the Intermediate Values by Interpolation]

Allowable radial load

For the conditions of hollow shaft type, frame size 4A100, output speed 30r/min, L=28mm, the allowable radial load in the output shaft radial load position is calculated as follows:

$$25000 - \frac{25000-24300}{30-25} \times (28-25) = 24580 \text{ [N]}$$

Allowable axial load

For the conditions of frame size 4B125 and output speed 36r/min, the allowable axial load on the output shaft is calculated as follows:

$$18900 - \frac{18900-16500}{45-35} \times (36-35) = 18660 \text{ [N]}$$

Allowable Radial and Axial Load

2. Allowable Radial Load - Hollow Shaft

[Conditions]

- No axial load is acting.
- The flange is mounted in the same direction as the shaft direction. Consult us if it is mounted in the reverse direction.
- For foot mount, the foot mount plate is mounted to the ground or ceiling. Consult us if wall mount is used.
- The strength class of mounting bolts is 12.9.

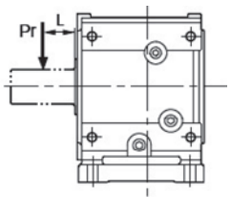

"L" indicates the distance from the hollow shaft end to the point of radial load.

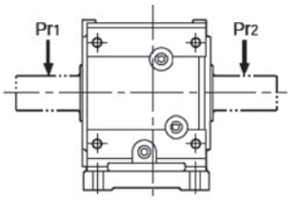

If the output shaft is a both-end shaft:
If Pr1 and Pr2 are in the same direction, select a model so that
Pro ≥ Pr1 and
Pro ≥ Pr2.
Consult us if the Pr1 and Pr2 are in different directions.

Table 20-A: Hollow Shaft Type, Allowable Radial Load Pro (Sizes A and B) [Units] Upper line: N; lower line: kgf

Frame Size	L mm	Output Shaft Speed r/min									
		5	10	20	30	35	45	50	60	75	90
4A10 □ 4A11 □ 4A12 □ 4A14 □	20	33,500	33,500	30,100	25,800	24,300	22,000	21,100	19,500	17,800	16,500
		3,400	3,400	3,100	2,600	2,500	2,200	2,200	2,000	1,800	1,700
	25	32,800	32,800	29,200	25,000	23,600	21,300	20,400	19,000	17,300	16,000
		3,300	3,300	3,000	2,500	2,400	2,200	2,100	1,900	1,800	1,600
	30	32,000	32,000	28,300	24,300	22,900	20,700	19,800	18,400	16,800	15,500
		3,300	3,300	2,900	2,500	2,300	2,100	2,000	1,900	1,700	1,600
	35	31,400	31,400	27,500	23,600	22,200	20,100	19,300	17,900	16,300	15,100
		3,200	3,200	2,800	2,400	2,300	2,000	2,000	1,800	1,700	1,500
	40	30,700	30,700	26,800	23,000	21,600	19,600	18,800	17,400	15,900	14,700
		3,100	3,100	2,700	2,300	2,200	2,000	1,900	1,800	1,600	1,500
	45	30,100	30,100	26,100	22,400	21,100	19,100	18,300	17,000	15,500	14,300
		3,100	3,100	2,700	2,300	2,200	1,900	1,900	1,700	1,600	1,500
	50	29,500	29,500	25,400	21,800	20,500	18,600	17,800	16,500	15,100	13,900
		3,000	3,000	2,600	2,200	2,100	1,900	1,800	1,700	1,500	1,400
	60	28,300	28,300	24,200	20,700	19,500	17,700	16,900	15,700	14,300	13,200
		2,900	2,900	2,500	2,100	2,000	1,800	1,700	1,600	1,500	1,300
	70	27,300	27,300	23,100	19,800	18,600	16,900	16,200	15,000	13,700	12,600
		2,800	2,800	2,400	2,000	1,900	1,700	1,700	1,500	1,400	1,300
	80	26,300	26,300	22,000	18,900	17,800	16,100	15,400	14,300	13,000	12,100
		2,700	2,700	2,200	1,900	1,800	1,600	1,600	1,500	1,300	1,200
	90	25,200	25,200	21,100	18,100	17,000	15,400	14,800	13,700	12,500	11,600
		2,600	2,600	2,200	1,800	1,700	1,600	1,500	1,400	1,300	1,200
4B12 □ 4B14 □ 4B16 □	20	55,100	52,100	40,100	34,100	32,000	28,800	27,600	25,500	23,000	21,200
		5,600	5,300	4,100	3,500	3,300	2,900	2,800	2,600	2,300	2,200
	25	54,100	50,800	39,100	33,300	31,200	28,100	26,900	24,800	22,500	20,700
		5,500	5,200	4,000	3,400	3,200	2,900	2,700	2,500	2,300	2,100
	30	52,200	49,600	38,200	32,500	30,500	27,500	26,300	24,300	22,000	20,200
		5,300	5,100	3,900	3,300	3,100	2,800	2,700	2,500	2,200	2,100
	35	49,900	48,500	37,300	31,700	29,800	26,800	25,700	23,700	21,400	19,700
		5,100	4,900	3,800	3,200	3,000	2,700	2,600	2,400	2,200	2,000
	40	47,700	47,400	36,500	31,000	29,100	26,200	25,100	23,200	21,000	19,300
		4,900	4,800	3,700	3,200	3,000	2,700	2,600	2,400	2,100	2,000
	45	45,800	45,800	35,700	30,400	28,500	25,700	24,500	22,700	20,500	18,800
		4,700	4,700	3,600	3,100	2,900	2,600	2,500	2,300	2,100	1,900
	50	44,000	44,000	34,900	29,700	27,900	25,100	24,000	22,200	20,100	18,400
		4,500	4,500	3,600	3,000	2,800	2,600	2,400	2,300	2,000	1,900
	60	40,700	40,700	33,400	28,500	26,700	24,100	23,000	21,300	19,200	17,700
		4,100	4,100	3,400	2,900	2,700	2,500	2,300	2,200	2,000	1,800
	70	38,000	38,000	32,100	27,300	25,700	23,100	22,100	20,400	18,500	17,000
		3,900	3,900	3,300	2,800	2,600	2,400	2,300	2,100	1,900	1,700
	80	35,500	35,500	30,900	26,300	24,700	22,200	21,300	19,600	17,800	16,300
		3,600	3,600	3,100	2,700	2,500	2,300	2,200	2,000	1,800	1,700
	90	33,400	33,400	29,800	25,300	23,800	21,400	20,500	18,900	17,100	15,700
		3,400	3,400	3,000	2,600	2,400	2,200	2,100	1,900	1,700	1,600
	100	31,500	31,500	28,700	24,400	23,000	20,700	19,800	18,200	16,500	15,200
		3,200	3,200	2,900	2,500	2,300	2,100	2,000	1,900	1,700	1,500
	120	28,300	28,300	26,800	22,800	21,400	19,300	18,400	17,000	15,400	14,200
		2,900	2,900	2,700	2,300	2,200	2,000	1,900	1,700	1,600	1,400

* The □ mark of each frame size represents 0, 5, DA, DB, or DC.

Allowable Radial and Axial Load

Table 20-B: Hollow Shaft Type, Allowable Radial Load Pro (Sizes C and D) [Units] Upper line: N; lower line: kgf

Frame Size	L mm	Output Shaft Speed r/min									
		5	10	20	30	35	45	50	60	75	90
4C14 □ 4C16 □ 4C17 □	20	78,300	70,000	52,700	44,200	41,200	36,600	34,800	31,800	28,300	25,600
		8,000	7,100	5,400	4,500	4,200	3,700	3,500	3,200	2,900	2,600
	25	76,900	68,400	51,600	43,200	40,300	35,800	34,000	31,100	27,700	25,100
		7,800	7,000	5,300	4,400	4,100	3,600	3,500	3,200	2,800	2,600
	30	75,600	67,000	50,500	42,300	39,400	35,000	33,300	30,400	27,100	24,500
		7,700	6,800	5,100	4,300	4,000	3,600	3,400	3,100	2,800	2,500
	35	74,400	65,500	49,400	41,400	38,600	34,300	32,600	29,800	26,500	24,000
		7,600	6,700	5,000	4,200	3,900	3,500	3,300	3,000	2,700	2,400
	40	73,200	64,200	48,400	40,500	37,800	33,600	31,900	29,100	26,000	23,500
		7,500	6,500	4,900	4,100	3,900	3,400	3,300	3,000	2,700	2,400
	45	72,000	62,900	47,400	39,700	37,000	32,900	31,300	28,500	25,400	23,000
		7,300	6,400	4,800	4,000	3,800	3,400	3,200	2,900	2,600	2,300
	50	70,800	61,600	46,400	38,900	36,300	32,200	30,600	28,000	24,900	22,600
		7,200	6,300	4,700	4,000	3,700	3,300	3,100	2,900	2,500	2,300
	60	68,400	59,200	44,600	37,400	34,900	31,000	29,500	26,900	24,000	21,700
		7,000	6,000	4,500	3,800	3,600	3,200	3,000	2,700	2,400	2,200
	70	63,900	57,100	43,000	36,000	33,600	29,900	28,400	25,900	23,100	20,900
		6,500	5,800	4,400	3,700	3,400	3,000	2,900	2,600	2,400	2,100
	80	60,000	55,000	41,500	34,700	32,400	28,800	27,400	25,000	22,300	20,200
		6,100	5,600	4,200	3,500	3,300	2,900	2,800	2,500	2,300	2,100
	90	56,600	53,100	40,000	33,500	31,300	27,800	26,400	24,100	21,500	19,500
		5,800	5,400	4,100	3,400	3,200	2,800	2,700	2,500	2,200	2,000
	100	53,500	51,400	38,700	32,400	30,200	26,900	25,500	23,300	20,800	18,800
		5,500	5,200	3,900	3,300	3,100	2,700	2,600	2,400	2,100	1,900
	120	48,300	48,200	36,300	30,400	28,300	25,200	23,900	21,900	19,500	17,600
		4,900	4,900	3,700	3,100	2,900	2,600	2,400	2,200	2,000	1,800
	140	44,000	44,000	34,200	28,600	26,700	23,700	22,500	20,600	18,300	16,600
		4,500	4,500	3,500	2,900	2,700	2,400	2,300	2,100	1,900	1,700
4D16 □ 4D17 □ 4D18 □	20	102,000	102,000	76,700	64,300	59,900	53,300	50,600	46,300	41,200	37,300
		10,400	10,400	7,800	6,600	6,100	5,400	5,200	4,700	4,200	3,800
	25	101,000	99,900	75,300	63,100	58,800	52,300	49,700	45,400	40,400	36,600
		10,300	10,200	7,700	6,400	6,000	5,300	5,100	4,600	4,100	3,700
	30	99,200	98,100	73,900	61,900	57,800	51,300	48,800	44,600	39,700	36,000
		10,100	10,000	7,500	6,300	5,900	5,200	5,000	4,500	4,000	3,700
	35	97,800	96,300	72,600	60,800	56,700	50,400	47,900	43,800	39,000	35,300
		10,000	9,800	7,400	6,200	5,800	5,100	4,900	4,500	4,000	3,600
	40	96,400	94,600	71,300	59,800	55,700	49,500	47,100	43,000	38,300	34,700
		9,800	9,600	7,300	6,100	5,700	5,000	4,800	4,400	3,900	3,500
	45	95,100	93,000	70,100	58,700	54,800	48,700	46,300	42,300	37,600	34,100
		9,700	9,500	7,100	6,000	5,600	5,000	4,700	4,300	3,800	3,500
	50	93,800	91,400	68,900	57,700	53,800	47,900	45,500	41,500	37,000	33,500
		9,600	9,300	7,000	5,900	5,500	4,900	4,600	4,200	3,800	3,400
	60	91,300	88,400	66,600	55,800	52,100	46,300	44,000	40,200	35,800	32,400
		9,300	9,000	6,800	5,700	5,300	4,700	4,500	4,100	3,600	3,300
	70	88,900	85,600	64,500	54,100	50,400	44,800	42,600	38,900	34,600	31,400
		9,100	8,700	6,600	5,500	5,100	4,600	4,300	4,000	3,500	3,200
	80	86,700	82,900	62,500	52,400	48,800	43,400	41,300	37,700	33,600	30,400
		8,800	8,500	6,400	5,300	5,000	4,400	4,200	3,800	3,400	3,100
	90	84,600	80,400	60,600	50,800	47,400	42,100	40,000	36,600	32,600	29,500
		8,600	8,200	6,200	5,200	4,800	4,300	4,100	3,700	3,300	3,000
	100	81,500	78,100	58,900	49,300	46,000	40,900	38,900	35,500	31,600	28,600
		8,300	8,000	6,000	5,000	4,700	4,200	4,000	3,600	3,200	2,900
	120	73,900	73,800	55,600	46,600	43,500	38,600	36,700	33,600	29,900	27,100
		7,500	7,500	5,700	4,800	4,400	3,900	3,700	3,400	3,000	2,800
	140	67,600	67,600	52,700	44,200	41,200	36,600	34,800	31,800	28,300	25,700
		6,900	6,900	5,400	4,500	4,200	3,700	3,500	3,200	2,900	2,600
	160	62,300	62,300	50,100	42,000	39,200	34,800	33,100	30,200	26,900	24,400
		6,400	6,400	5,100	4,300	4,000	3,500	3,400	3,100	2,700	2,500

* The □ mark of each frame size represents 0, 5, DA, DB, or DC.

Allowable Radial and Axial Load

Table 20-C: Hollow Shaft Type, Allowable Radial Load Pro (Sizes E and F) [Units] Upper line: N; lower line: kgf

Frame Size	L mm	Output Shaft Speed r/min									
		5	10	20	30	35	45	50	60	75	90
4E17 □ 4E18 □ 4E19 □	20	103,000	103,000	103,000	86,900	81,200	72,500	69,000	63,200	56,600	51,400
		10,500	10,500	10,500	8,900	8,300	7,400	7,000	6,400	5,800	5,200
	25	102,000	102,000	102,000	85,500	79,800	71,200	67,800	62,100	55,600	50,600
		10,400	10,400	10,400	8,700	8,100	7,300	6,900	6,300	5,700	5,200
	30	100,000	100,000	99,800	84,000	78,500	70,000	66,700	61,100	54,700	49,700
		10,200	10,200	10,200	8,600	8,000	7,100	6,800	6,200	5,600	5,100
	35	98,900	98,900	98,200	82,600	77,200	68,900	65,600	60,100	53,800	48,900
		10,100	10,100	10,000	8,400	7,900	7,000	6,700	6,100	5,500	5,000
	40	97,600	97,600	96,600	81,300	75,900	67,700	64,500	59,100	52,900	48,100
		9,900	9,900	9,800	8,300	7,700	6,900	6,600	6,000	5,400	4,900
	45	96,400	96,400	95,000	80,000	74,700	66,700	63,500	58,100	52,000	47,300
		9,800	9,800	9,700	8,200	7,600	6,800	6,500	5,900	5,300	4,800
	50	95,100	95,100	93,500	78,700	73,600	65,600	62,500	57,200	51,200	46,600
		9,700	9,700	9,500	8,000	7,500	6,700	6,400	5,800	5,200	4,800
	60	92,800	92,800	90,700	76,300	71,300	63,600	60,600	55,500	49,700	45,200
		9,500	9,500	9,200	7,800	7,300	6,500	6,200	5,700	5,100	4,600
	70	90,500	90,500	88,000	74,100	69,200	61,700	58,800	53,800	48,200	43,800
		9,200	9,200	9,000	7,600	7,100	6,300	6,000	5,500	4,900	4,500
	80	88,400	88,400	85,500	71,900	67,200	59,900	57,100	52,300	46,800	42,600
		9,000	9,000	8,700	7,300	6,900	6,100	5,800	5,300	4,800	4,300
	90	86,300	86,300	83,100	69,900	65,300	58,300	55,500	50,800	45,500	41,400
		8,800	8,800	8,500	7,100	6,700	5,900	5,700	5,200	4,600	4,200
	100	84,400	84,400	80,800	68,000	63,500	56,700	54,000	49,400	44,200	40,200
		8,600	8,600	8,200	6,900	6,500	5,800	5,500	5,000	4,500	4,100
	120	80,700	80,700	76,600	64,500	60,300	53,800	51,200	46,900	42,000	38,200
		8,200	8,200	7,800	6,600	6,100	5,500	5,200	4,800	4,300	3,900
	140	77,400	77,400	72,900	61,300	57,300	51,100	48,700	44,600	39,900	36,300
		7,900	7,900	7,400	6,200	5,800	5,200	5,000	4,500	4,100	3,700
	160	74,300	74,300	69,500	58,500	54,600	48,700	46,400	42,500	38,000	34,600
		7,600	7,600	7,100	6,000	5,600	5,000	4,700	4,300	3,900	3,500
4F18 □ 4F19 □	20	134,000	134,000	134,000	134,000	132,000	118,000	113,000	103,000	92,700	84,500
		13,700	13,700	13,700	13,700	13,500	12,000	11,500	10,500	9,400	8,600
	25	133,000	133,000	133,000	133,000	130,000	117,000	111,000	102,000	91,400	83,300
		13,600	13,600	13,600	13,600	13,300	11,900	11,300	10,400	9,300	8,500
	30	131,000	131,000	131,000	131,000	129,000	115,000	109,000	100,000	90,100	82,100
		13,400	13,400	13,400	13,400	13,100	11,700	11,100	10,200	9,200	8,400
	35	130,000	130,000	130,000	130,000	127,000	113,000	108,000	99,100	88,800	81,000
		13,300	13,300	13,300	13,300	12,900	11,500	11,000	10,100	9,100	8,300
	40	128,000	128,000	128,000	128,000	125,000	112,000	106,000	97,700	87,600	79,900
		13,000	13,000	13,000	13,000	12,700	11,400	10,800	10,000	8,900	8,100
	45	127,000	127,000	127,000	127,000	123,000	110,000	105,000	96,400	86,400	78,800
		12,900	12,900	12,900	12,900	12,500	11,200	10,700	9,800	8,800	8,000
	50	126,000	126,000	126,000	126,000	122,000	109,000	104,000	95,100	85,200	77,700
		12,800	12,800	12,800	12,800	12,400	11,100	10,600	9,700	8,700	7,900
	60	123,000	123,000	123,000	123,000	118,000	106,000	101,000	92,600	83,000	75,700
		12,500	12,500	12,500	12,500	12,000	10,800	10,300	9,400	8,500	7,700
	70	121,000	121,000	121,000	121,000	115,000	103,000	98,300	90,200	80,900	73,700
		12,300	12,300	12,300	12,300	11,700	10,500	10,000	9,200	8,200	7,500
	80	118,000	118,000	118,000	118,000	113,000	101,000	95,800	88,000	78,900	71,900
		12,000	12,000	12,000	12,000	11,500	10,300	9,800	9,000	8,000	7,300
	90	116,000	116,000	116,000	116,000	110,000	98,100	93,500	85,800	77,000	70,100
		11,800	11,800	11,800	11,800	11,200	10,000	9,500	8,700	7,800	7,100
	100	116,000	116,000	116,000	115,000	107,000	95,800	91,300	83,800	75,100	68,500
		11,800	11,800	11,800	11,700	10,900	9,800	9,300	8,500	7,700	7,000
	120	114,000	114,000	114,000	109,000	102,000	91,500	87,100	80,000	71,700	65,400
		11,600	11,600	11,600	11,100	10,400	9,300	8,900	8,200	7,300	6,700
	140	105,000	105,000	105,000	105,000	97,900	87,500	83,400	76,500	68,600	62,500
		10,700	10,700	10,700	10,700	10,000	8,900	8,500	7,800	7,000	6,400
	160	102,000	102,000	102,000	100,000	93,900	83,900	79,900	73,300	65,800	59,900
		10,400	10,400	10,400	10,200	9,600	8,600	8,100	7,500	6,700	6,100

* The □ mark of each frame size represents 0, 5, DA, DB, or DC.

Allowable Radial and Axial Load

3. Allowable Radial Load - Solid Shaft

[Conditions]

- ●No axial load is acting.
- ●The flange is mounted in the same direction as the shaft direction. Consult us if it is mounted in the reverse direction.
- ●For foot mount, the foot mount plate is mounted to the ground or ceiling. Consult us if wall mount is used.
- ●The strength class of mounting bolts is 12.9.

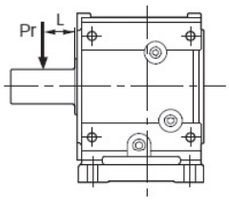

"L" indicates the distance from the output shaft end to the point of radial load.

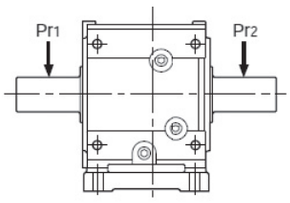

If the output shaft is a both-end shaft:

If Pr1 and Pr2 are in the same direction, select a model so that
Pro ≥ Pr1 and
Pro ≥ Pr2.

Consult us if Pr1 and Pr2 are in different directions.

Table 21-A: Solid Shaft Type, Allowable Radial Load Pro (Sizes A and B) [Units] Upper line: N; lower line: kgf

Frame Size	L mm	Output Shaft Speed r/min									
		5	10	20	30	35	45	50	60	75	90
4A10 □ 4A11 □ 4A12 □ 4A14 □	20	33500	33500	28800	24500	23000	20700	19800	18300	16500	15200
		3400	3400	2900	2500	2300	2100	2000	1900	1700	1500
	25	30000	30000	27900	23800	22300	20100	19200	17700	16000	14700
		3100	3100	2800	2400	2300	2000	2000	1800	1600	1500
	30	25000	25000	25000	23100	21700	19500	18600	17200	15600	14300
		2500	2500	2500	2400	2200	2000	1900	1800	1600	1500
	35	21400	21400	21400	21400	21100	19000	18100	16700	15100	13900
		2200	2200	2200	2200	2200	1900	1800	1700	1500	1400
	40	18700	18700	18700	18700	18700	18400	17600	16300	14700	13500
		1900	1900	1900	1900	1900	1900	1800	1700	1500	1400
	45	16700	16700	16700	16700	16700	16700	16700	15900	14300	13200
		1700	1700	1700	1700	1700	1700	1700	1600	1500	1300
	50	15000	15000	15000	15000	15000	15000	15000	15000	14000	12800
		1500	1500	1500	1500	1500	1500	1500	1500	1400	1300
	60	12500	12500	12500	12500	12500	12500	12500	12500	12500	12200
		1300	1300	1300	1300	1300	1300	1300	1300	1300	1200
	70	10700	10700	10700	10700	10700	10700	10700	10700	10700	10700
		1100	1100	1100	1100	1100	1100	1100	1100	1100	1100
	80	9370	9370	9370	9370	9370	9370	9370	9370	9370	9370
		1000	1000	1000	1000	1000	1000	1000	1000	1000	1000
	90	8330	8330	8330	8330	8330	8330	8330	8330	8330	8330
		800	800	800	800	800	800	800	800	800	800
4B12 □ 4B14 □ 4B16 □	20	55100	47400	35300	29400	27300	24100	22800	20700	18300	16500
		5600	4800	3600	3000	2800	2500	2300	2100	1900	1700
	25	54100	46200	34500	28700	26700	23500	22300	20200	17900	16100
		5500	4700	3500	2900	2700	2400	2300	2100	1800	1600
	30	53100	45100	33700	28000	26000	23000	21800	19800	17500	15700
		5400	4600	3400	2900	2700	2300	2200	2000	1800	1600
	35	47900	44100	32900	27400	25400	22500	21300	19300	17100	15300
		4900	4500	3400	2800	2600	2300	2200	2000	1700	1600
	40	41900	41900	32200	26700	24900	21900	20800	18900	16700	15000
		4300	4300	3300	2700	2500	2200	2100	1900	1700	1500
	45	37300	37300	31500	26200	24300	21500	20300	18500	16300	14700
		3800	3800	3200	2700	2500	2200	2100	1900	1700	1500
	50	33500	33500	30800	25600	23800	21000	19900	18100	16000	14300
		3400	3400	3100	2600	2400	2100	2000	1800	1600	1500
	60	28000	28000	28000	24500	22800	20100	19100	17300	15300	13700
		2900	2900	2900	2500	2300	2000	1900	1800	1600	1400
	70	24000	24000	24000	23600	21900	19300	18300	16600	14700	13200
		2400	2400	2400	2400	2200	2000	1900	1700	1500	1300
	80	21000	21000	21000	21000	21000	18600	17600	16000	14100	12700
		2100	2100	2100	2100	2100	1900	1800	1600	1400	1300
	90	18600	18600	18600	18600	18600	17900	17000	15400	13600	12200
		1900	1900	1900	1900	1900	1800	1700	1600	1400	1200
	100	16800	16800	16800	16800	16800	16800	16400	14900	13100	11800
		1700	1700	1700	1700	1700	1700	1700	1500	1300	1200
	120	14000	14000	14000	14000	14000	14000	14000	13900	12300	11000
		1400	1400	1400	1400	1400	1400	1400	1400	1300	1100

* The □ mark of each frame size represents 0, 5, DA, DB, or DC.

Allowable Radial and Axial Load

Table 21-B: Solid Shaft Type, Allowable Radial Load Pro (Sizes C and D) [Units] Upper line: N; lower line: kgf

Frame Size	L mm	Output Shaft Speed r/min									
		5	10	20	30	35	45	50	60	75	90
4C14 □ 4C16 □ 4C17 □	20	78300	66700	49400	40800	37900	33300	31500	28400	25000	22300
		8000	6800	5000	4200	3900	3400	3200	2900	2500	2300
	25	76900	65200	48300	39900	37000	32500	30800	27800	24400	21800
		7800	6600	4900	4100	3800	3300	3100	2800	2500	2200
	30	75600	63800	47300	39100	36200	31800	30100	27200	23900	21300
		7700	6500	4800	4000	3700	3200	3100	2800	2400	2200
	35	74400	62400	46200	38200	35400	31200	29500	26600	23400	20900
		7600	6400	4700	3900	3600	3200	3000	2700	2400	2100
	40	73200	61100	45300	37400	34700	30500	28800	26100	22900	20400
		7500	6200	4600	3800	3500	3100	2900	2700	2300	2100
	45	72000	59900	44400	36700	34000	29900	28300	25500	22400	20000
		7300	6100	4500	3700	3500	3000	2900	2600	2300	2000
	50	69100	58700	43500	36000	33300	29300	27700	25000	22000	19600
		7000	6000	4400	3700	3400	3000	2800	2500	2200	2000
	60	57600	56400	41800	34600	32000	28200	26600	24100	21100	18900
		5900	5700	4300	3500	3300	2900	2700	2500	2200	1900
	70	49400	49400	40300	33300	30900	27100	25600	23200	20300	18200
		5000	5000	4100	3400	3100	2800	2600	2400	2100	1900
	80	43200	43200	38800	32100	29800	26200	24700	22400	19600	17500
		4400	4400	4000	3300	3000	2700	2500	2300	2000	1800
	90	38400	38400	37500	31000	28700	25300	23900	21600	18900	16900
		3900	3900	3800	3200	2900	2600	2400	2200	1900	1700
	100	34500	34500	34500	30000	27800	24400	23100	20900	18300	16400
		3500	3500	3500	3100	2800	2500	2400	2100	1900	1700
	120	28800	28800	28800	28100	26000	22900	21600	19600	17200	15300
		2900	2900	2900	2900	2700	2300	2200	2000	1800	1600
	140	24700	24700	24700	24700	24500	21500	20400	18400	16200	14400
		2500	2500	2500	2500	2500	2200	2100	1900	1700	1500
4D16 □ 4D17 □ 4D18 □	20	102000	96000	71000	58600	54200	47600	44900	40500	35500	31600
		10400	9800	7200	6000	5500	4900	4600	4100	3600	3200
	25	101000	94300	69700	57500	53200	46700	44100	39800	34800	31000
		10300	9600	7100	5900	5400	4800	4500	4100	3500	3200
	30	99200	92500	68400	56400	52200	45800	43300	39000	34200	30400
		10100	9400	7000	5700	5300	4700	4400	4000	3500	3100
	35	97800	90900	67200	55400	51300	45000	42500	38300	33600	29900
		10000	9300	6900	5600	5200	4600	4300	3900	3400	3000
	40	96400	89300	66000	54400	50400	44200	41700	37700	33000	29400
		9800	9100	6700	5500	5100	4500	4300	3800	3400	3000
	45	95100	87700	64800	53500	49500	43400	41000	37000	32400	28900
		9700	8900	6600	5500	5000	4400	4200	3800	3300	2900
	50	93800	86200	63700	52600	48700	42700	40300	36400	31900	28400
		9600	8800	6500	5400	5000	4400	4100	3700	3300	2900
	60	85400	83400	61600	50800	47100	41300	39000	35200	30800	27400
		8700	8500	6300	5200	4800	4200	4000	3600	3100	2800
	70	73200	73200	59700	49200	45600	40000	37800	34100	29800	26600
		7500	7500	6100	5000	4600	4100	3900	3500	3000	2700
	80	64100	64100	57800	47700	44200	38700	36600	33000	28900	25700
		6500	6500	5900	4900	4500	3900	3700	3400	2900	2600
	90	56900	56900	56100	46300	42800	37600	35500	32000	28000	25000
		5800	5800	5700	4700	4400	3800	3600	3300	2900	2500
	100	51300	51300	51300	44900	41600	36500	34500	31100	27200	24200
		5200	5200	5200	4600	4200	3700	3500	3200	2800	2500
	120	42700	42700	42700	42500	39300	34500	32600	29400	25700	22900
		4400	4400	4400	4300	4000	3500	3300	3000	2600	2300
	140	36600	36600	36600	36600	36600	32700	30900	27900	24400	21700
		3700	3700	3700	3700	3700	3300	3100	2800	2500	2200
	160	32000	32000	32000	32000	32000	31100	29300	26500	23200	20600
		3300	3300	3300	3300	3300	3200	3000	2700	2400	2100

* The □ mark of each frame size represents 0, 5, DA, DB, or DC.

Allowable Radial and Axial Load

Table 21-C: Solid Shaft Type, Allowable Radial Load Pro (Sizes E and F) [Units] Upper line: N; lower line: kgf

Frame Size	L mm	Output Shaft Speed r/min									
		5	10	20	30	35	45	50	60	75	90
4E17 □ 4E18 □ 4E19 □	20	103000	103000	100000	84000	78300	69500	66000	60200	53600	48500
		10500	10500	10200	8600	8000	7100	6700	6100	5500	4900
	25	102000	102000	98600	82500	76900	68300	64900	59200	52700	47600
		10400	10400	10100	8400	7800	7000	6600	6000	5400	4900
	30	100000	100000	96900	81100	75600	67200	63800	58200	51800	46800
		10200	10200	9900	8300	7700	6900	6500	5900	5300	4800
	35	98900	98900	95300	79800	74400	66000	62700	57200	50900	46100
		10100	10100	9700	8100	7600	6700	6400	5800	5200	4700
	40	97600	97600	93800	78500	73200	65000	61700	56300	50100	45300
		9900	9900	9600	8000	7500	6600	6300	5700	5100	4600
	45	96400	96400	92300	77200	72000	63900	60700	55400	49300	44600
		9800	9800	9400	7900	7300	6500	6200	5600	5000	4500
	50	95100	95100	90800	76000	70900	62900	59800	54500	48500	43900
		9700	9700	9300	7700	7200	6400	6100	5600	4900	4500
	60	92800	92800	88100	73700	68700	61000	57900	52900	47000	42600
		9500	9500	9000	7500	7000	6200	5900	5400	4800	4300
	70	90500	90500	85500	71500	66700	59200	56200	51300	45600	41300
		9200	9200	8700	7300	6800	6000	5700	5200	4600	4200
	80	88400	88400	83000	69500	64700	57500	54600	49800	44300	40100
		9000	9000	8500	7100	6600	5900	5600	5100	4500	4100
	90	86300	86300	80700	67500	62900	55900	53100	48400	43100	39000
		8800	8800	8200	6900	6400	5700	5400	4900	4400	4000
	100	84400	84400	78500	65700	61200	54400	51600	47100	41900	37900
		8600	8600	8000	6700	6200	5500	5300	4800	4300	3900
	120	74900	74900	74400	62300	58100	51600	49000	44700	39800	36000
		7600	7600	7600	6400	5900	5300	5000	4600	4100	3700
	140	64200	64200	64200	59200	55200	49000	46600	42500	37800	34200
		6500	6500	6500	6000	5600	5000	4800	4300	3900	3500
	160	56200	56200	56200	56200	52600	46700	44400	40500	36000	32600
		5700	5700	5700	5700	5400	4800	4500	4100	3700	3300
4F18 □ 4F19 □	20	134,000	134,000	134,000	134,000	133,000	119,000	114,000	104,000	93,400	85,200
		13,700	13,700	13,700	13,700	13,600	12,100	11,600	10,600	9,500	8,700
	25	133,000	133,000	133,000	133,000	131,000	117,000	112,000	103,000	92,100	83,900
		13,600	13,600	13,600	13,600	13,400	11,900	11,400	10,500	9,400	8,600
	30	131,000	131,000	131,000	131,000	130,000	116,000	110,000	101,000	90,700	82,700
		13,400	13,400	13,400	13,400	13,300	11,800	11,200	10,300	9,200	8,400
	35	130,000	130,000	130,000	130,000	128,000	114,000	109,000	99,800	89,500	81,500
		13,300	13,300	13,300	13,300	13,000	11,600	11,100	10,200	9,100	8,300
	40	128,000	128,000	128,000	128,000	126,000	113,000	107,000	98,400	88,200	80,400
		13,000	13,000	13,000	13,000	12,800	11,500	10,900	10,000	9,000	8,200
	45	127,000	127,000	127,000	127,000	124,000	111,000	106,000	97,000	87,000	79,300
		12,900	12,900	12,900	12,900	12,600	11,300	10,800	9,900	8,900	8,100
	50	126,000	126,000	126,000	126,000	122,000	109,000	104,000	95,700	85,800	78,200
		12,800	12,800	12,800	12,800	12,400	11,100	10,600	9,800	8,700	8,000
	60	123,000	123,000	123,000	123,000	119,000	107,000	102,000	93,200	83,600	76,200
		12,500	12,500	12,500	12,500	12,100	10,900	10,400	9,500	8,500	7,800
	70	121,000	121,000	121,000	121,000	116,000	104,000	98,900	90,800	81,400	74,200
		12,300	12,300	12,300	12,300	11,800	10,600	10,100	9,300	8,300	7,600
	80	118,000	118,000	118,000	118,000	113,000	101,000	96,400	88,500	79,400	72,300
		12,000	12,000	12,000	12,000	11,500	10,300	9,800	9,000	8,100	7,400
	90	116,000	116,000	116,000	116,000	111,000	98,700	94,100	86,300	77,400	70,600
		11,800	11,800	11,800	11,800	11,300	10,100	9,600	8,800	7,900	7,200
	100	116,000	116,000	116,000	115,000	108,000	96,400	91,800	84,300	75,600	68,900
		11,800	11,800	11,800	11,700	11,000	9,800	9,400	8,600	7,700	7,000
	120	114,000	114,000	114,000	110,000	103,000	92,000	87,600	80,400	72,100	65,700
		11,600	11,600	11,600	11,200	10,500	9,400	8,900	8,200	7,300	6,700
	140	105,000	105,000	105,000	105,000	98,500	88,000	83,800	76,900	69,000	62,900
		10,700	10,700	10,700	10,700	10,000	9,000	8,500	7,800	7,000	6,400
	160	95,700	95,700	95,700	95,700	94,300	84,300	80,300	73,700	66,100	60,200
		9,800	9,800	9,800	9,800	9,600	8,600	8,200	7,500	6,700	6,100

* The □ mark of each frame size represents 0, 5, DA, DB, or DC.

Allowable Radial and Axial Load

4. Allowable Axial Load

- No radial load must be acting.
- The strength class of mounting bolts must be 12.9.

Table 22: Allowable Axial Load (Common to Hollow and Solid Shafts) [Units] Upper line: N; lower line: kgf

Frame Size	Output Shaft Speed r/min									
	5	10	20	30	35	45	50	60	75	90
4A10 □, 4A11 □	22100	22100	22100	20400	18900	16500	15600	14000	12200	10800
4A12 □, 4A14 □	2300	2300	2300	2100	1900	1700	1600	1400	1200	1100
4B12 □, 4B14 □	41500	39300	27700	21900	19900	16700	15400	13300	10900	9010
4B16 □	4200	4000	2800	2200	2000	1700	1600	1400	1100	900
4C14 □, 4C16 □	64800	48500	32800	25000	22200	17900	16200	13300	10000	7450
4C17 □	6600	4900	3300	2500	2300	1800	1700	1400	1000	800
4D16 □, 4D17 □	92600	66100	44400	33500	29700	23700	21400	17400	12800	9210
4D18 □	9400	6700	4500	3400	3000	2400	2200	1800	1300	900
4E17 □, 4E18 □	93300	91500	63600	49600	44700	37100	34100	29100	23200	18700
4E19 □	9500	9300	6500	5100	4600	3800	3500	3000	2400	1900
4F18 □, 4F19 □	150000	150000	109000	87500	79900	68200	63600	55800	46800	39800
	15300	15300	11100	8900	8100	7000	6500	5700	4800	4100

* The □ mark of each frame size represents 0, 5, DA, DB, or DC. -

5. Input Shaft Radial Load

Check the input shaft radial load using the following formula:

$$Pr \leqq \frac{Pro}{Lf \cdot Cf \cdot Fs} \text{ [N, kgf]}$$

Pr : Actual radial load [N, kgf]
Pro : Allowable radial load [N, kgf]
Lf : Load location factor (Table 23)
Cf : Coupling factor (Table 18)
Fs : Shock factor (Table 19)

Table 23: Radial Load Location Factors for Input Shaft Lf

Frame Size	Load location L mm														
	5	10	15	20	25	30	35	40	45	50	60	70	80	90	100
4A10DA, 4A12DA, 4B12DA, 4B14DA, 4C14DA	0.73	0.91	1.20	1.60	2.00	-	-	-	-	-	-	-	-	-	-
4A12DB, 4B12DB, 4B14DB, 4C14DB, 4C16DA, 4D16DA, 4D17DA, 4E17DA	0.88	0.96	1.20	1.59	2.00	2.38	-	-	-	-	-	-	-	-	-
4A100, 4A105, 4C14DC, 4D16DB, 4D17DB, 4D18DA, 4E17DB, 4E18DA, 4F18DA	0.91	0.97	1.20	1.59	2.00	2.38	-	-	-	-	-	-	-	-	-
4A110, 4A115	0.91	0.97	1.20	1.59	2.00	2.38	-	-	-	-	-	-	-	-	-
4A120, 4A125, 4B120, 4B125, 4D17DC, 4E17DC, 4E19DA, 4F19DA	-	0.81	0.93	1.14	1.41	1.67	1.96	2.22	-	-	-	-	-	-	-
4A140, 4A145, 4B140, 4B145, 4C140, 4C145, 4D18DB, 4E18DB, 4E19DB, 4F18DB, 4F19DB	-	0.78	0.89	1.00	1.23	1.45	1.69	1.92	2.13	-	-	-	-	-	-
4B160, 4B165, 4C160, 4C165, 4D160, 4D165	-	0.92	0.95	0.98	1.05	1.18	1.28	1.41	1.52	1.64	1.85	-	-	-	-
4C170, 4C175, 4D170, 4D175, 4E170, 4E175	-	-	0.93	0.96	0.99	1.05	1.16	1.28	1.39	1.49	1.72	1.92	2.17	-	-
4D180, 4D185, 4E180, 4E185, 4F180, 4F185	-	-	-	0.93	0.96	0.99	1.05	1.15	1.25	1.35	1.56	1.75	1.96	2.17	-
4E190, 4E195, 4F190, 4F195	-	-	-	0.93	0.95	0.98	1.00	1.09	1.16	1.25	1.41	1.59	1.75	1.92	2.08

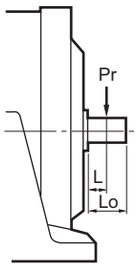

If L = Lo/2,
Lf = 1.

Allowable Radial and Axial Load

Table 24: Allowable Radial load for Input Shaft Pro (Units: Upper line: N; lower line: kgf)

(Cf, Lf, Fs = 1)

Frame Size	Reduction Ratio	Input Speed r/min						
		1750	1450	1165	980	870	720	580
4A10DA, 4A12DA, 4B12DA, 4B14DA, 4C14DA	364 - 5177, 7228, 10658	196 20	147 15	147 15	196 20	196 20	196 20	196 20
	1849, 2537	49.1 5	49.1 5	49.1 5	49.1 5	49.1 5	147 15	196 20
4A12DB, 4B12DB, 4B14DB, 4C14DB, 4C16DA, 4D16DA, 4D17DA, 4E17DA	All	294 30 196 20	294 30 196 20	294 30 196 20	294 30 196 20	294 30 245 25	294 30 245 25	294 30 294 30
4A100, 4A105, 4C14DC, 4D16DB, 4D17DB, 4D18DA, 4E17DB, 4E18DA, 4F18DA	11 - 39 , 54 - 578 , 809, 1117 1656 , 2272 - 10658	441 45	441 45	491 50	540 55	589 60	589 60	589 60
	42, 46, 48, 53, 683, 956, 1320, 1957	441 45	343 35	441 45	491 50	491 50	540 55	589 60
4A110, 4A115	19 - 28 , 67 - 305	441 45	343 35	441 45	491 50	491 50	540 55	589 60
	35 - 60	196 20	196 20	196 20	196 20	245 25	245 25	294 30
4A120, 4A125, 4B120, 4B125, 4D17DC, 4E17DC, 4E19DA, 4F19DA	11 - 60 , 364 - 2559 , 3511 , 5177	590 60	690 70	740 75	780 80	880 90	880 90	880 90
	67 - 305 , 2944 , 4365 , 6472 - 10658	540 55	440 45	490 50	540 55	590 60	880 90	880 90
4D18DB, 4E18DB, 4E19DB, 4F18DB, 4F19DB	11 - 74	1370 140	1370 140	1370 140	1520 155	1620 165	1720 175	1860 190
	80 - 305	1280 130	1280 130	1280 130	1370 140	1470 150	1570 160	1770 180
4A140, 4A145, 4B140, 4B145, 4C140, 4C145	11 - 28	1370 140	1370 140	1370 140	1520 155	1620 165	1720 175	1860 190
	35 - 74	1230 125	980 100	1080 110	1180 120	1230 125	1320 135	1470 150
	80 , 88	1080 110	1130 115	1180 120	1280 130	1320 135	1370 140	1470 150
	93 - 305	540 55	590 60	590 60	690 70	690 70	690 70	1080 110
4B160, 4B165, 4C160, 4C165, 4D160, 4D165	11 - 88 , 163 - 207	1770 180	1770 180	1960 200	2060 210	2160 220	2160 220	2160 220
	93 - 151 , 227 - 305	1080 110	1180 120	1280 130	1370 140	1370 140	1570 160	1770 180
4C170, 4C175, 4D170, 4D175, 4E170, 4E175	All	2060 210	2060 210	2260 230	2260 230	2350 240	2450 250	2650 270
4D180, 4D185, 4E180, 4E185, 4F180, 4F185	All	2750 280	2550 260	2750 280	2940 300	3040 310	3340 340	3430 350
4E190, 4E195, 4F190, 4F195	35 - 88	3040 310	3040 310	3240 330	3530 360	3630 370	3920 400	3920 400
	93 - 305	2650 270	2550 260	2840 290	2940 300	3140 320	3340 340	3630 370

Moment of Inertia / GD^2

1. Moment of Inertia / GD^2 and starting time

For successful starting of a driven machine, the starting torque must be sufficiently larger than the load torque and the motor torque must consistently be greater than the load torque, including the period from the start of operation to reaching the full load speed).
The difference between the motor torque and load torque in starting operation is referred to as the accelerating torque. If the average accelerating torque is taken as $\overline{T}a$ [N·m, kgf·m], the starting time to the rotating speed n [r/min], i.e., ts(s), is calculated with the moment of inertia or GD^2 by using the following formulas:

$$ts = \frac{(J_M+J_C+J_L)\cdot n}{9.55\cdot \overline{T}a} \text{ (S)} \qquad ts = \frac{(GD_M^2+GD_C^2+GD_L^2)\cdot n}{375\cdot \overline{T}a} \text{ (S)}$$

Where, J_M: Motor's moment of inertia, including brake drum [kg·m²]
J_C: Cyclo reducer's moment of inertia [kg·m²]
J_L: Driven machine's moment of inertia (including coupling and pulley) converted to the value at the motor shaft [kg·m²]
GD_M^2: GD^2 of motor, including brake drum [kgf·m²]
GD_C^2: GD^2 of Cyclo reducer [kgf·m²]
GD_L^2: Driven machine's GD^2 (including coupling and pulley) converted to the value at the motor shaft [kgf·m²]

Average Accelerating Torque $\overline{T}a$

The average accelerating torque refers to the average of the difference between the motor and load torque as shown in the right graph, that is, the average of the actual torque required to accelerate the load. For determining the starting time, both the motor torque and load torque curves are necessary. However, because it is extremely difficult to determine the average accelerating torque, the average accelerating torque at the actual load torque is calculated as below.
For starting with the full voltage, the average load torque over the starting period, Ta [N·m, kgf·m] is calculated approximately.

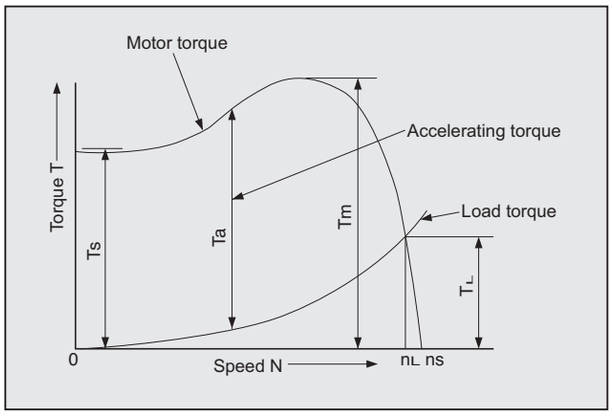

Torque Curve Ts : Starting torque
Tm: Maximum torque (Stalling Torque)
Ta : Accelerating torque
T_L : Full load torque
ns : Synchronous rotating speed
n_L : Full load rotating speed

$$\overline{T}a \fallingdotseq 0.8\left(\frac{Ts+Tm}{2}\right) - \overline{T}_L \text{ (N·m, kgf·m)}$$

Furthermore, the average load torque over the starting period, $\overline{T}_L$ [N·m, kgf·m] is approximately expressed as follows if the full load torque is T_L [N·m, kgf·m]:

For constant torque load·····$\overline{T}_L \fallingdotseq T_L$ (N·m, kgf·m)
For square of reduced torque load·····$\overline{T}_L \fallingdotseq 0.34T_L$ (N·m, kgf·m)

Moment of Inertia / GD²

2. Calculation of Moment of Inertia J

(1) Moment of Inertia of Rotating Motion

If the axis of rotation passes through the center of gravity:		If the axis of rotation does not pass through the center of gravity:	
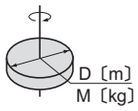	$J=\frac{1}{8}MD^2$ [kg·m²]	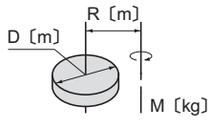	$J=\frac{M}{4}\left(\frac{1}{2}D^2+4R^2\right)$ [kg·m²]
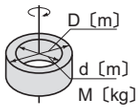	$J=\frac{1}{8}M(D^2+d^2)$ [kg·m²]	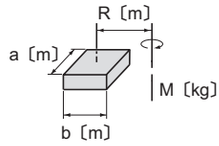	$J=\frac{M}{4}\left(\frac{a^2+b^2}{3}+4R^2\right)$ [kg·m²]
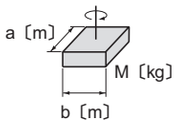	$J=\frac{1}{12}M(a^2+b^2)$ [kg·m²]	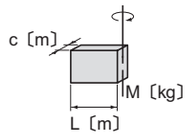	$J=\frac{1}{12}M(4L^2+C^2)$ [kg·m²]

(2) Moment of Inertia of Rectilinear Motion (at Loaded Shaft)

General application	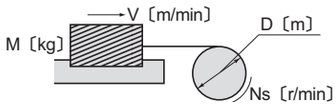	$J=\frac{M}{4}\left(\frac{V}{\pi\cdot Ns}\right)^2=\frac{M}{4}D^2$	[kg·m²]
Horizontal motion by conveyor	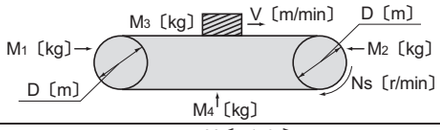	$J=\frac{1}{4}\left(\frac{M_1+M_2}{2}+M_3+M_4\right)\times D^2$	[kg·m²]
Horizontal motion by lead screw	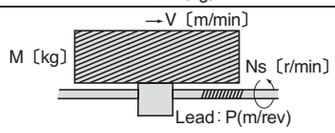	$J=\frac{M}{4}\left(\frac{V}{\pi\cdot Ns}\right)^2=\frac{M}{4}\left(\frac{P}{\pi}\right)^2$	[kg·m²]
Vertical motion by hoist	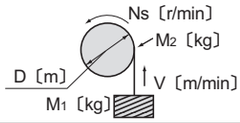	$J=\frac{M_1D^2}{4}+\frac{1}{8}M_2D^2$	[kg·m²]

(3) Conversion to the value at Motor Shaft (Input Shaft)

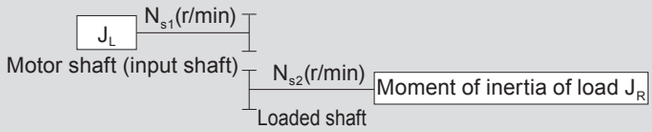

$$J_L=\left(\frac{N_{s2}}{N_{s1}}\right)^2J_R=\left(\frac{1}{Z}\right)^2J_R$$

Z: Total reduction ratio

Moment of Inertia / GD^2

3. Calculation of GD^2

(1) GD^2 of Rotating Motion

If the axis of rotation passes through the center of gravity:		If the axis of rotation does not pass through the center of gravity:	
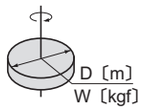	$GD^2=\frac{1}{2}WD^2$ [kgf·m²]	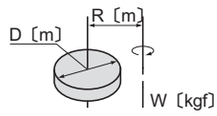	$GD^2=W\left(\frac{1}{2}D^2+4R^2\right)$ [kgf·m²]
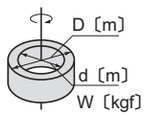	$GD^2=\frac{1}{2}W(D^2+d^2)$ [kgf·m²]	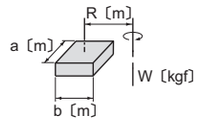	$GD^2=W\left(\frac{a^2+b^2}{3}+4R^2\right)$ [kgf·m²]
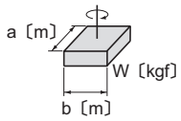	$GD^2=\frac{1}{3}W(a^2+b^2)$ [kgf·m²]	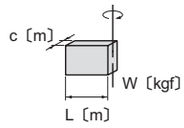	$GD^2=\frac{1}{3}W(4L^2+C^2)$ [kgf·m²]

(2) GD^2 of Rectilinear Motion (at Loaded Shaft)

General application	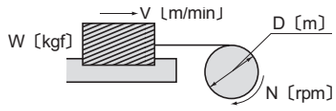	$GD^2=W\left(\frac{V}{\pi\cdot N}\right)^2=WD^2$ [kgf·m²]
Horizontal motion by conveyor	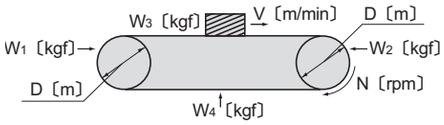	$GD^2=\left(\frac{W_1+W_2}{2}+W_3+W_4\right)\times D^2$ [kgf·m²]
Horizontal motion by lead screw	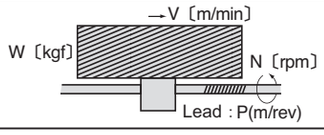	$GD^2=W\left(\frac{V}{\pi\cdot N}\right)^2=W\left(\frac{P}{\pi}\right)^2$ [kgf·m²]
Vertical motion by hoist	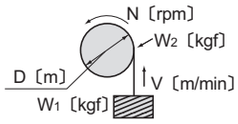	$GD^2=W_1D^2+\frac{1}{2}W_2D^2$ [kgf·m²]

(3) Conversion to the value at Motor Shaft (Input Shaft)

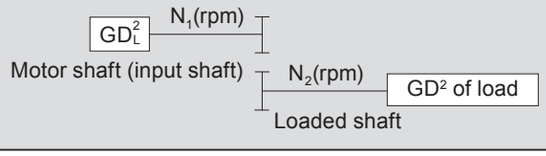

$$GD_L^2=\left(\frac{N_2}{N_1}\right)^2GD^2=\left(\frac{1}{Z}\right)^2GD^2$$

Z: Total reduction ratio

Moment of Inertia / GD²

4. Moment of Inertia / GD² of Bevel BUDDYBOX®

The tables below list the values of the moment of inertia and GD² at input shaft of Bevel BUDDYBOX.
These tables are for reduction ratios 11~305. Consult us for reduction ratios of 364 or more.

J (moment of inertia) [$\times 10^{-4}$ kg-m²]
GD² [$\times 10^{-4}$ kgf-m²]

Table 25-A Moment of Inertia / GD² of Bevel BUDDYBOX® (Hollow Shaft Type)

Frame size	Reduction ratio																	
	11		13		14		16		18		21		22		25		28	
	J	GD²	J	GD²	J	GD²	J	GD²	J	GD²	J	GD²	J	GD²	J	GD²	J	GD²
4A10 □	4.60	18.4	2.86	11.4	2.64	10.6	1.78	7.12	1.72	6.86	1.35	5.41	-	-	-	-	0.884	3.54
4A11 □	-	-	-	-	-	-	-	-	-	-	2.08	8.31	-	-	-	-	1.44	5.74
4A12 □	11.3	45.2	6.89	27.6	6.67	26.7	4.99	20.0	4.84	19.4	3.74	15.0	4.21	16.9	4.14	16.6	2.89	11.5
4A14 □	24.4	97.4	15.5	62.0	15.3	61.1	11.0	44.1	10.9	43.5	9.87	39.5	10.2	40.7	10.1	40.4	6.65	26.6
4B12 □	15.3	61.3	9.48	37.9	8.93	35.7	6.72	26.9	4.31	17.3	4.75	19.0	5.06	20.2	4.88	19.5	3.45	13.8
4B14 □	28.4	113	18.2	72.8	17.7	70.6	12.8	51.2	12.4	49.8	11.0	43.9	11.1	44.3	10.9	43.6	7.27	29.1
4B16 □	81.0	324	52.1	208	51.6	206	35.5	142	35.1	141	26.1	105	29.5	118	29.3	117	18.0	72.2
4C14 □	40.1	160	26.4	105	24.6	98.3	18.1	72.6	11.6	46.4	14.2	56.6	13.8	55.4	13.2	53.0	9.06	36.2
4C16 □	93.4	373	60.8	243	59.0	236	40.9	164	39.7	159	29.2	117	32.1	129	31.6	126	19.8	79.0
4C17 □	161	644	102	410	101	403	77.2	309	76.0	304	69.8	279	68.3	273	67.7	271	51.4	206
4D16 □	-	-	-	-	-	-	-	-	-	-	36.8	147	39.0	156	37.1	149	24.0	96.1
4D17 □	200	801	129	516	123	494	94.5	378	90.9	364	77.5	310	75.3	301	73.4	294	55.7	223
4D18 □	304	1218	155	618	149	596	107	426	103	411	107	429	92.2	369	90.3	361	77.5	310
4E17 □	-	-	-	-	-	-	-	-	-	-	89.2	357	84.7	339	82.0	328	62.3	249
4E18 □	351	1405	182	729	174	697	126	504	120	481	119	476	102	406	98.9	395	84.0	336
4E19 □	551	2203	300	1198	291	1166	207	828	201	805	225	901	190	760	187	749	166	664
4F18 □	522	2086	286	1142	272	1087	200	801	190	762	155	618	130	519	125	500	104	416
4F19 □	686	2744	383	1534	369	1478	266	1066	257	1026	263	1054	220	880	215	861	187	750

Frame size	Reduction ratio																	
	35		39		46		53		60		67		74		80		88	
	J	GD²	J	GD²	J	GD²	J	GD²	J	GD²	J	GD²	J	GD²	J	GD²	J	GD²
4A10 □	0.544	2.18	0.514	2.06	0.475	1.90	0.414	1.65	0.297	1.19	0.314	1.26	0.306	1.22	0.275	1.10	0.270	1.08
4A11 □	1.05	4.19	1.02	4.07	0.891	3.56	0.813	3.25	0.760	3.04	0.665	2.66	0.657	2.63	0.634	2.54	0.628	2.51
4A12 □	1.78	7.12	1.75	7.00	1.85	7.39	1.72	6.89	1.29	5.16	1.45	5.80	1.44	5.77	1.33	5.33	1.33	5.31
4A14 □	4.71	18.8	4.68	18.7	3.77	15.1	3.40	13.6	3.01	12.0	2.56	10.3	2.56	10.2	2.38	9.52	2.38	9.50
4B12 □	2.12	8.49	2.05	8.20	2.06	8.24	1.88	7.53	1.42	5.66	1.54	6.18	1.52	6.10	1.40	5.60	1.38	5.54
4B14 □	5.08	20.3	5.01	20.0	4.01	16.0	3.58	14.3	3.14	12.6	2.67	10.7	2.65	10.6	2.45	9.81	2.44	9.75
4B16 □	12.9	51.6	12.8	51.3	11.3	45.2	10.1	40.5	8.53	34.1	7.79	31.2	7.77	31.1	7.25	29.0	7.23	28.9
4C14 □	6.20	24.8	5.96	23.8	4.69	18.8	4.09	16.3	3.54	14.2	2.97	11.9	2.91	11.6	2.67	10.7	2.62	10.5
4C16 □	14.0	55.9	13.7	54.9	12.0	47.8	10.6	42.5	8.91	35.6	8.08	32.3	8.02	32.1	7.46	29.8	7.41	29.6
4C17 □	38.9	155	38.6	155	36.1	144	31.9	128	30.5	122	28.4	114	28.3	113	27.3	109	27.2	109
4D16 □	16.8	67.1	16.0	64.0	13.6	54.3	11.8	47.3	9.86	39.4	8.85	35.4	8.64	34.5	8.00	32.0	7.85	31.4
4D17 □	41.7	167	40.9	164	37.7	151	33.1	133	31.4	126	29.1	117	28.9	116	27.8	111	27.7	111
4D18 □	62.8	251	62.1	248	55.4	221	48.7	195	46.0	184	43.5	174	43.3	173	40.1	161	40.0	160
4E17 □	45.5	182	44.4	178	40.2	161	35.0	140	32.9	132	30.2	121	29.9	120	28.6	114	28.3	113
4E18 □	66.7	267	65.5	262	57.8	231	50.6	202	47.4	190	44.5	178	44.2	177	40.9	164	40.7	163
4E19 □	142	568	141	563	129	518	123	490	117	468	109	435	108	433	105	421	105	420
4F18 □	78.1	312	76.2	305	65.4	262	56.3	225	51.9	208	47.7	191	47.1	189	43.1	172	42.7	171
4F19 □	154	616	152	609	138	550	129	515	122	487	112	448	111	446	108	430	107	429

Frame size	Reduction ratio															
	102		112		123		151		179		207		249		305	
	J	GD²	J	GD²	J	GD²	J	GD²	J	GD²	J	GD²	J	GD²	J	GD²
4A10 □	0.19	0.75	0.172	0.69	0.17	0.676	0.154	0.618	0.206	0.824	0.138	0.552	0.196	0.785	0.131	0.523
4A11 □	0.60	2.42	0.577	2.31	0.57	2.30	0.559	2.24	0.541	2.16	0.536	2.14	0.529	2.12	0.525	2.10
4A12 □	0.94	3.74	0.887	3.55	0.88	3.54	0.838	3.35	1.16	4.64	0.795	3.18	1.12	4.50	0.763	3.05
4A14 □	2.18	8.72	2.11	8.42	2.10	8.41	1.97	7.87	1.92	7.66	1.91	7.66	1.86	7.45	1.85	7.41
4B12 □	0.98	3.91	0.921	3.68	0.91	3.65	0.857	3.43	1.17	4.69	0.805	3.22	1.13	4.53	0.768	3.07
4B14 □	2.23	8.90	2.14	8.57	2.14	8.54	1.99	7.96	1.93	7.73	1.93	7.70	1.87	7.48	1.86	7.43
4B16 □	6.41	25.7	6.15	24.6	6.14	24.6	5.88	23.5	5.77	23.1	5.80	23.2	5.54	22.2	5.46	21.8
4C14 □	2.36	9.45	2.25	9.01	2.23	8.92	2.05	8.21	1.98	7.90	1.96	7.84	1.89	7.58	1.87	7.49
4C16 □	6.54	26.2	6.26	25.0	6.23	24.9	5.94	23.8	5.81	23.2	5.83	23.3	5.56	22.2	5.47	21.9
4C17 □	25.7	103	25.4	102	25.4	102	24.6	98.3	24.3	97.0	23.9	95.8	23.8	95.3	23.7	94.9
4D16 □	6.87	27.5	6.53	26.1	6.46	25.8	6.09	24.3	5.92	23.7	5.90	23.6	5.62	22.5	5.51	22.0
4D17 □	26.0	104	25.7	103	25.6	103	24.7	98.9	24.4	97.4	24.0	96.1	23.9	95.5	23.8	95.0
4D18 □	38.0	152	37.4	150	37.4	149	36.2	145	35.2	141	34.9	140	34.6	138	34.4	137
4E17 □	26.5	106	26.1	104	26.0	104	25.0	99.8	24.5	98.1	24.1	96.6	24.0	95.9	23.8	95.2
4E18 □	38.5	154	37.8	151	37.7	151	36.5	146	35.3	141	35.0	140	34.7	139	34.4	138
4E19 □	102	407	98.9	396	98.8	395	97.1	388	96.0	384	95.2	381	94.6	378	94.1	376
4F18 □	40.0	160	38.9	156	38.7	155	37.2	149	35.8	143	35.4	142	34.9	140	34.6	138
4F19 □	103	413	100	400	99.9	400	97.9	391	96.6	386	95.6	382	94.9	380	94.3	377

Notes: 1. The □ mark of each frame size contains 0 or 5.
2. Table 25 does not include the moment of inertia or GD² values of any motor.
To calculate the moment of inertia or GD² for the gearmotor type, add the GD² of motor (Table 26 or 27) to the value listed in the table.
3. Consult us for the moment of inertia and GD² for a reduction ratio of 364 or more.
4. The above values are subject to change without notice.

Moment of Inertia / GD²

J (moment of inertia) [×10⁻⁴ kg-m²]
GD² [×10⁻⁴ kgf-m²]

Table 25-B: Moment of Inertia / GD2 of Solid shaft Type (L/R)

Frame size	Reduction ratio																	
	11		13		14		16		18		21		22		25		28	
	J	GD²	J	GD²	J	GD²	J	GD²	J	GD²	J	GD²	J	GD²	J	GD²	J	GD²
4A10 □	4.64	18.6	2.88	11.5	2.66	10.7	1.80	7.18	1.64	6.55	1.36	5.45	-	-	-	-	0.890	3.56
4A11 □	-	-	-	-	-	-	-	-	-	-	2.09	8.34	-	-	-	-	1.44	5.76
4A12 □	11.3	45.4	6.92	27.7	6.69	26.8	5.01	20.0	4.85	19.4	3.75	15.0	4.22	16.9	4.15	16.6	2.89	11.6
4A14 □	24.4	97.6	15.5	62.1	15.3	61.2	11.0	44.2	10.9	43.6	9.88	39.5	10.2	40.7	10.1	40.4	6.65	26.6
4B12 □	15.5	62.0	9.61	38.4	9.03	36.1	6.80	27.2	6.42	25.7	4.79	19.2	5.10	20.4	4.91	19.7	3.48	13.9
4B14 □	28.5	114	11.4	45.8	10.9	43.5	12.9	51.5	12.5	50.0	11.0	44.0	11.1	44.5	10.9	43.7	7.29	29.2
4B16 □	81.2	325	52.2	209	51.7	207	35.6	142	35.2	141	26.2	105	29.5	118	29.4	117	18.1	72.3
4C14 □	40.5	162	26.6	107	24.8	99.2	18.3	73.3	17.1	68.5	14.3	57.0	13.9	55.7	13.3	53.3	9.12	36.5
4C16 □	93.7	375	36.4	146	34.5	138	41.0	164	39.9	160	29.3	117	32.2	129	31.6	126	19.8	79.2
4C17 □	161	645	103	411	101	404	77.3	309	76.1	305	69.9	280	68.4	274	67.8	271	51.4	206
4D16 □	-	-	-	-	-	-	-	-	-	-	37.0	148	39.2	157	37.3	149	24.1	96.6
4D17 □	201	805	80.1	320	74.4	298	94.9	380	91.2	365	77.7	311	75.5	302	73.6	294	55.8	223
4D18 □	305	1222	155	621	150	598	107	428	103	412	107	430	92.4	370	90.5	362	77.6	310
4E17 □	-	-	-	-	-	-	-	-	-	-	89.7	359	85.2	341	82.4	330	62.6	250
4E18 □	353	1414	141	565	133	532	127	508	121	485	119	478	102	409	99.3	397	84.3	337
4E19 □	553	2212	301	1204	293	1171	208	832	202	808	226	903	191	762	188	751	166	665
4F18 □	528	2111	225	900	210	842	203	812	193	771	156	625	131	525	126	505	105	420
4F19 □	692	2768	388	1550	373	1492	269	1077	259	1036	265	1060	221	886	216	866	188	753

Frame size	Reduction ratio																	
	35		39		46		53		60		67		74		80		88	
	J	GD²	J	GD²	J	GD²	J	GD²	J	GD²	J	GD²	J	GD²	J	GD²	J	GD²
4A10 □	0.547	2.19	0.517	2.07	0.477	1.91	0.415	1.66	0.298	1.19	0.315	1.26	0.307	1.23	0.276	1.10	0.270	1.08
4A11 □	1.05	4.20	1.02	4.08	0.893	3.57	0.814	3.26	0.761	3.04	0.666	2.67	0.658	2.63	0.635	2.54	0.629	2.52
4A12 □	1.78	7.14	1.75	7.02	1.85	7.39	1.72	6.90	1.29	5.16	1.45	5.81	1.44	5.77	1.33	5.33	1.33	5.31
4A14 □	4.71	18.9	4.68	18.7	3.78	15.1	3.40	13.6	3.01	12.0	2.57	10.3	2.56	10.2	2.38	9.53	2.38	9.50
4B12 □	2.14	8.56	2.06	8.25	2.07	8.28	1.89	7.56	1.42	5.68	1.55	6.20	1.53	6.11	1.40	5.61	1.39	5.55
4B14 □	5.10	20.4	5.02	20.1	4.02	16.1	3.58	14.3	3.15	12.6	2.67	10.7	2.65	10.6	2.46	9.82	2.44	9.77
4B16 □	12.9	51.7	12.8	51.4	11.3	45.3	10.1	40.6	8.54	34.2	7.79	31.2	7.77	31.1	7.25	29.0	7.24	28.9
4C14 □	6.23	24.9	5.99	23.9	4.71	18.8	4.10	16.4	3.55	14.2	2.98	11.9	2.91	11.7	2.68	10.7	2.63	10.5
4C16 □	14.0	56.1	13.8	55.1	12.0	47.9	10.6	42.5	8.92	35.7	8.09	32.4	8.03	32.1	7.46	29.9	7.41	29.7
4C17 □	38.9	156	38.7	155	36.1	145	31.9	128	30.5	122	28.4	114	28.3	113	27.3	109	27.2	109
4D16 □	16.8	67.4	16.1	64.2	13.6	54.5	11.9	47.5	9.88	39.5	8.87	35.5	8.65	34.6	8.01	32.0	7.86	31.4
4D17 □	41.8	167	41.0	164	37.8	151	33.2	133	31.5	126	29.2	117	29.0	116	27.8	111	27.7	111
4D18 □	62.9	252	62.1	249	55.4	222	48.8	195	46.0	184	43.5	174	43.3	173	40.2	161	40.0	160
4E17 □	45.7	183	44.6	178	40.4	161	35.1	140	33.0	132	30.3	121	29.9	120	28.6	114	28.4	113
4E18 □	66.9	267	65.7	263	58.0	232	50.7	203	47.5	190	44.6	178	44.3	177	40.9	164	40.7	163
4E19 □	142	569	141	564	130	518	123	491	117	468	109	435	108	433	105	421	105	420
4F18 □	78.6	315	76.6	307	65.8	263	56.5	226	52.1	208	47.8	191	47.3	189	43.2	173	42.8	171
4F19 □	155	619	153	611	138	552	129	516	122	488	112	448	112	446	108	430	107	429

Frame size	Reduction ratio															
	102		112		123		151		179		207		249		305	
	J	GD²	J	GD²	J	GD²	J	GD²	J	GD²	J	GD²	J	GD²	J	GD²
4A10 □	0.188	0.754	0.175	0.699	0.169	0.677	0.155	0.618	0.206	0.825	0.138	0.553	0.196	0.785	0.131	0.523
4A11 □	0.605	2.42	0.578	2.31	0.575	2.30	0.559	2.24	0.541	2.16	0.536	2.14	0.529	2.12	0.525	2.10
4A12 □	0.936	3.74	0.887	3.55	0.884	3.54	0.838	3.35	1.16	4.64	0.795	3.18	1.12	4.50	0.763	3.05
4A14 □	2.18	8.72	2.11	8.42	2.10	8.41	1.97	7.88	1.92	7.67	1.91	7.66	1.86	7.45	1.85	7.41
4B12 □	0.980	3.92	0.929	3.72	0.915	3.66	0.858	3.43	1.17	4.69	0.806	3.22	1.13	4.53	0.768	3.07
4B14 □	2.23	8.91	2.14	8.58	2.14	8.55	1.99	7.96	1.93	7.73	1.93	7.71	1.87	7.49	1.86	7.43
4B16 □	6.41	25.7	6.15	24.6	6.14	24.6	5.88	23.5	5.77	23.1	5.80	23.2	5.54	22.2	5.46	21.8
4C14 □	2.37	9.47	2.27	9.08	2.23	8.93	2.05	8.22	1.98	7.91	1.96	7.84	1.89	7.58	1.87	7.49
4C16 □	6.55	26.2	6.26	25.0	6.24	24.9	5.94	23.8	5.81	23.3	5.83	23.3	5.56	22.3	5.47	21.9
4C17 □	25.7	103	25.4	102	25.4	102	24.6	98.3	24.3	97.0	23.9	95.8	23.8	95.3	23.7	94.9
4D16 □	6.88	27.5	6.56	26.2	6.46	25.8	6.09	24.4	5.92	23.7	5.91	23.6	5.62	22.5	5.51	22.0
4D17 □	26.0	104	25.7	103	25.6	103	24.7	98.9	24.4	97.4	24.0	96.1	23.9	95.5	23.8	95.0
4D18 □	38.0	152	37.4	150	37.4	149	36.2	145	35.2	141	34.9	140	34.6	138	34.4	137
4E17 □	26.5	106	26.2	105	26.0	104	25.0	99.8	24.5	98.1	24.1	96.6	24.0	95.9	23.8	95.3
4E18 □	38.5	154	37.8	151	37.7	151	36.5	146	35.3	141	35.1	140	34.7	139	34.4	138
4E19 □	102	407	98.9	396	98.8	395	97.1	389	96.0	384	95.2	381	94.6	378	94.1	376
4F18 □	40.1	160	39.0	156	38.8	155	37.2	149	35.8	143	35.4	142	34.9	140	34.6	138
4F19 □	103	414	100	401	99.9	400	97.9	392	96.6	386	95.6	382	94.9	380	94.3	377

Notes: 1. The □ mark of each frame size contains 0 or 5.
2. Table 25 does not include the moment of inertia or GD² values of any motor.
To calculate the moment of inertia or GD² for the gearmotor type, add the GD² of motor (Table 26 or 27) to the value listed in the table.
3. Consult us for the moment of inertia and GD² for a reduction ratio of 364 or more.
4. The above values are subject to change without notice.

Moment of Inertia / GD²

J (moment of inertia) [×10⁻⁴ kg-m²]
GD² [×10⁻⁴ kgf-m²]

Table 25-C: Moment of Inertia / GD2 of BBB, both-end shaft (T) type

Frame size	Reduction ratio																	
	11		13		14		16		18		21		22		25		28	
	J	GD²	J	GD²	J	GD²	J	GD²	J	GD²	J	GD²	J	GD²	J	GD²	J	GD²
4A10 □	4.83	19.3	3.01	12.1	2.77	11.1	1.89	7.55	1.72	6.86	1.41	5.65	-	-	-	-	0.917	3.67
4A11 □	-	-	-	-	-	-	-	-	-	-	2.14	8.54	-	-	-	-	1.47	5.88
4A12 □	10.2	40.7	7.05	28.2	6.80	27.2	5.09	20.4	4.93	19.7	3.80	15.2	4.27	17.1	4.18	16.7	2.92	11.7
4A14 □	21.3	85.3	15.7	62.6	15.4	61.7	11.1	44.5	11.0	43.9	9.93	39.7	10.2	40.8	10.1	40.5	6.68	26.7
4B12 □	16.0	63.9	9.92	39.7	9.29	37.2	7.01	28.0	6.59	26.4	4.91	19.6	5.20	20.8	5.00	20.0	3.54	14.2
4B14 □	29.0	116	18.6	74.5	18.0	72.0	13.1	52.3	12.7	50.7	11.1	44.5	11.2	44.9	11.0	44.1	7.36	29.4
4B16 □	70.0	280	52.5	210	51.9	208	35.8	143	35.4	141	26.3	105	29.6	119	29.4	118	18.1	72.6
4C14 □	41.5	166	27.3	109	25.4	102	18.8	75.1	17.5	70.0	14.5	58.1	14.2	56.7	13.5	54.1	9.27	37.1
4C16 □	94.8	379	61.8	247	59.8	239	41.5	166	40.3	161	29.5	118	32.5	130	31.8	127	20.0	79.8
4C17 □	140	560	103	414	102	406	77.8	311	76.5	306	70.2	281	68.7	275	68.0	272	51.6	206
4D16 □	-	-	-	-	-	-	-	-	-	-	37.6	150	39.7	159	37.7	151	24.5	97.9
4D17 □	203	813	131	524	125	501	95.9	384	92.0	368	78.3	313	75.6	302	74.0	296	56.2	225
4D18 □	242	968	157	627	151	603	108	432	104	416	108	432	92.9	372	90.9	363	77.9	312
4E17 □	-	-	-	-	-	-	-	-	-	-	90.9	363	86.2	345	83.2	333	63.2	253
4E18 □	358	1432	187	746	178	711	129	516	123	491	121	482	103	414	100	400	85.0	340
4E19 □	446	1785	304	1216	295	1180	210	841	204	815	227	908	192	766	188	754	167	668
4F18 □	534	2134	293	1173	278	1113	206	822	195	780	158	631	135	540	127	509	106	423
4F19 □	587	2346	391	1565	376	1504	272	1088	261	1045	266	1066	223	891	218	870	189	757

Frame size	Reduction ratio																	
	35		39		46		53		60		67		74		80		88	
	J	GD²	J	GD²	J	GD²	J	GD²	J	GD²	J	GD²	J	GD²	J	GD²	J	GD²
4A10 □	0.565	2.26	0.532	2.13	0.487	1.95	0.423	1.69	0.304	1.22	0.320	1.28	0.311	1.24	0.279	1.12	0.273	1.09
4A11 □	1.07	4.27	1.03	4.14	0.903	3.61	0.822	3.29	0.767	3.07	0.671	2.68	0.662	2.65	0.638	2.55	0.632	2.53
4A12 □	1.80	7.21	1.77	7.07	1.86	7.44	1.73	6.93	1.30	5.19	1.46	5.82	1.45	5.79	1.34	5.35	1.33	5.32
4A14 □	4.73	18.9	4.70	18.8	3.79	15.1	3.41	13.6	3.01	12.0	2.57	10.3	2.56	10.2	2.39	9.54	2.38	9.52
4B12 □	2.18	8.72	2.10	8.39	2.09	8.38	1.91	7.64	1.44	5.74	1.56	6.24	1.54	6.15	1.41	5.64	1.39	5.58
4B14 □	5.14	20.6	5.06	20.2	4.04	16.2	3.60	14.4	3.16	12.6	2.68	10.7	2.66	10.6	2.46	9.86	2.45	9.79
4B16 □	13.0	51.9	12.9	51.5	11.3	45.4	10.2	40.6	8.55	34.2	7.81	31.2	7.78	31.1	7.26	29.0	7.24	29.0
4C14 □	6.33	25.3	6.07	24.3	4.77	19.1	4.15	16.6	3.59	14.3	3.01	12.0	2.94	11.7	2.69	10.8	2.64	10.6
4C16 □	14.1	56.4	13.8	55.4	12.0	48.1	10.7	42.7	8.96	35.8	8.12	32.5	8.05	32.2	7.48	29.9	7.43	29.7
4C17 □	39.0	156	38.7	155	36.2	145	32.0	128	30.5	122	28.4	114	28.3	113	27.3	109	27.2	109
4D16 □	17.0	68.2	16.2	64.9	13.7	55.0	12.0	47.8	10.0	39.8	8.93	35.7	8.70	34.8	8.05	32.2	7.89	31.6
4D17 □	42.0	168	41.2	165	37.9	152	33.3	133	31.5	126	29.2	117	29.0	116	27.9	111	27.7	111
4D18 □	63.1	252	62.3	249	55.5	222	48.8	195	46.1	184	43.6	174	43.3	173	40.2	161	40.0	160
4E17 □	46.1	184	44.9	180	40.6	162	35.3	141	33.1	132	30.4	121	30.0	120	28.7	115	28.4	114
4E18 □	67.3	269	66.0	264	58.2	233	50.9	203	47.7	191	44.7	179	44.4	177	41.0	164	40.8	163
4E19 □	143	570	141	565	130	519	123	491	117	469	109	435	108	434	105	421	105	420
4F18 □	79.1	317	77.1	308	66.1	264	56.8	227	52.3	209	48.0	192	47.4	190	43.3	173	42.9	172
4F19 □	155	621	153	612	138	553	129	517	122	489	112	449	112	447	108	431	107	429

Frame size	Reduction ratio															
	102		112		123		151		179		207		249		305	
	J	GD²	J	GD²	J	GD²	J	GD²	J	GD²	J	GD²	J	GD²	J	GD²
4A10 □	0.191	0.762	0.174	0.696	0.171	0.683	0.156	0.622	0.207	0.828	0.139	0.555	0.197	0.786	0.131	0.524
4A11 □	0.607	2.43	0.579	2.32	0.576	2.30	0.560	2.24	0.541	2.17	0.537	2.15	0.530	2.12	0.526	2.10
4A12 □	0.938	3.75	0.889	3.56	0.886	3.54	0.839	3.35	1.16	4.64	0.795	3.18	1.13	4.50	0.763	3.05
4A14 □	2.18	8.73	2.11	8.43	2.10	8.42	1.97	7.88	1.92	7.67	1.92	7.66	1.86	7.45	1.85	7.41
4B12 □	0.985	3.94	0.926	3.71	0.918	3.67	0.860	3.44	1.18	4.70	0.807	3.23	1.13	4.53	0.769	3.07
4B14 □	2.23	8.93	2.15	8.59	2.14	8.56	1.99	7.97	1.93	7.73	1.93	7.71	1.87	7.49	1.86	7.43
4B16 □	6.42	25.7	6.16	24.6	6.15	24.6	5.88	23.5	5.77	23.1	5.80	23.2	5.54	22.2	5.46	21.8
4C14 □	2.38	9.51	2.27	9.06	2.24	8.96	2.06	8.24	1.98	7.92	1.96	7.85	1.90	7.59	1.87	7.50
4C16 □	6.56	26.2	6.27	25.1	6.24	25.0	5.94	23.8	5.82	23.3	5.83	23.3	5.56	22.3	5.47	21.9
4C17 □	25.7	103	25.4	102	25.4	102	24.6	98.3	24.3	97.0	23.9	95.8	23.8	95.3	23.7	94.9
4D16 □	6.90	27.6	6.56	26.2	6.48	25.9	6.10	24.4	5.93	23.7	5.91	23.7	5.62	22.5	5.51	22.0
4D17 □	26.0	104	25.7	103	25.7	103	24.7	99.0	24.4	97.5	24.0	96.1	23.9	95.6	23.8	95.0
4D18 □	38.0	152	37.5	150	37.4	150	36.2	145	35.2	141	34.9	140	34.6	138	34.4	137
4E17 □	26.6	106	26.2	105	26.0	104	25.0	99.9	24.5	98.2	24.2	96.6	24.0	95.9	23.8	95.3
4E18 □	38.6	154	37.9	151	37.7	151	36.5	146	35.4	141	35.1	140	34.7	139	34.4	138
4E19 □	102	407	98.9	396	98.8	395	97.1	389	96.0	384	95.2	381	94.6	379	94.1	376
4F18 □	40.2	161	39.0	156	38.8	155	37.2	149	35.9	143	35.4	142	34.9	140	34.6	138
4F19 □	103	414	100	401	100	400	97.9	392	96.6	386	95.6	382	94.9	380	94.3	377

Notes: 1. The □ mark of each frame size contains 0 or 5.
2. Table 25 does not include the moment of inertia or GD² values of any motor.
To calculate the moment of inertia or GD² for the gearmotor type, add the GD² of motor (Table 26 or 27) to the value listed in the table.
3. Consult us for the moment of inertia and GD² for a reduction ratio of 364 or more.
4. The above values are subject to change without notice.

5. Moment of Inertia of Motors·GD²

Table 26: Moment of Inertia·GD² of Three Phase Motors

[4P Motor]

Unit: J_M (Moment of Inertia) (kg·m²) GD_M^2 (kgf·m²)

kW×P	0.1kW×4P		0.2kW×4P		0.25kW×4P		0.4kW×4P		0.55kW×4P		0.75kW×4P	
	J_M	GD_M^2	J_M	GD_M^2	J_M	GD_M^2	J_M	GD_M^2	J_M	GD_M^2	J_M	GD_M^2
Standard	0.000325	0.0013	0.000500	0.0020	0.000500	0.0020	0.000650	0.0026	0.00101	0.0041	0.00120	0.0048
With Brake	0.000350	0.0014	0.000550	0.0022	0.000550	0.0022	0.000675	0.0027	0.00111	0.0045	0.00130	0.0052

kW×P	1.1kW×4P		1.5kW×4P		2.2kW×4P		3.0kW×4P		3.7kW×4P		5.5kW×4P	
	J_M	GD_M^2	J_M	GD_M^2	J_M	GD_M^2	J_M	GD_M^2	J_M	GD_M^2	J_M	GD_M^2
Standard	0.00185	0.0074	0.00213	0.0085	0.00333	0.0133	0.00700	0.0281	0.00848	0.0339	0.0114	0.0457
With Brake	0.00208	0.0083	0.00235	0.0094	0.00373	0.0149	0.00810	0.0325	0.00958	0.0383	0.0125	0.0501

kW×P	7.5kW×4P		11kW×4P		15kW×4P		18.5W×4P		22kW×4P		30kW×4P	
	J_M	GD_M^2	J_M	GD_M^2	J_M	GD_M^2	J_M	GD_M^2	J_M	GD_M^2	J_M	GD_M^2
Standard	0.0268	0.107	0.0375	0.150	0.0898	0.359	0.225	0.900	0.225	0.900	0.250	1.00
With Brake	0.0303	0.121	0.0410	0.164	0.107	0.428	0.243	0.972	0.243	0.972	0.262	1.05

kW×P	37kW×4P		45kW×4P		55kW×4P	
	J_M	GD_M^2	J_M	GD_M^2	J_M	GD_M^2
Standard	0.308	1.23	0.343	1.37	0.675	2.70
With Brake	0.321	1.28	0.356	1.42	-	-

[6P Motor]

kW×P	15kW×6P		18.5W×6P		22kW×6P		30kW×6P	
	J_M	GD_M^2	J_M	GD_M^2	J_M	GD_M^2	J_M	GD_M^2
Standard	0.318	1.27	0.363	1.45	0.363	1.45	0.475	1.90
With Brake	0.336	1.34	0.375	1.50	0.375	1.50	0.488	1.95

kW×P	37kW×6P		45kW×6P		55kW×6P	
	J_M	GD_M^2	J_M	GD_M^2	J_M	GD_M^2
Standard	0.600	2.40	1.00	4.00	1.18	4.70
With Brake	0.613	2.45	-	-	-	-

Table 27: Moment of Inertia·GD² of Three Phase Inverter Duty Motor (AF Motor) and High Efficiency IE2 Motor

Unit: J_M (Moment of Inertia) (kg·m²) GD_M^2 (kgf·m²)

kW×P	0.1kW×4P		0.2kW×4P		0.4kW×4P		0.75kW×4P		1.5kW×4P		2.2kW×4P	
	J_M	GD_M^2	J_M	GD_M^2	J_M	GD_M^2	J_M	GD_M^2	J_M	GD_M^2	J_M	GD_M^2
Standard	0.000500	0.0020	0.000650	0.0026	0.00120	0.0048	0.00213	0.0085	0.00333	0.0133	0.00848	0.0339
With Brake	0.000550	0.0022	0.000675	0.0027	0.00130	0.0052	0.00235	0.0094	0.00373	0.0149	0.00958	0.0383

kW×P	3.7kW×4P		5.5kW×4P		7.5kW×4P		11kW×4P		15kW×4P		18.5kW×4P	
	J_M	GD_M^2	J_M	GD_M^2	J_M	GD_M^2	J_M	GD_M^2	J_M	GD_M^2	J_M	GD_M^2
Standard	0.0114	0.0457	0.0268	0.107	0.0375	0.150	0.0898	0.359	0.225	0.900	0.250	1.00
With Brake	0.0125	0.0501	0.0303	0.121	0.0410	0.164	0.1070	0.428	0.243	0.972	0.262	1.05

kW×P	22kW×4P		30kW×4P		37kW×4P	
	J_M	GD_M^2	J_M	GD_M^2	J_M	GD_M^2
Standard	0.250	1.00	0.308	1.23	0.343	1.37
With Brake	0.262	1.05	0.321	1.28	0.356	1.42

Selection Tables for Gearmotors

Important Notes :

Following notes must be considered when using selection tables from page 55 to 123.

1. For the nomenclature of models listed on the selection table, refer to page 23.
2. Consult us if the mounting position is Y4, F4, G4, K4 or W4 (motor is faced down), because these selection tables are not applicable.
3. Allowable duty cycle of models with ※ mark in the model column is 75% ED (10 min. cycle) in case of mounting positions Y2, F2, G2, K2, V2 or W2.
4. In "Allowable Radial Load of Output Shaft (Pro)" column, the values for hollow shaft type are those at 20mm away from the shaft end face, and the values for solid shaft type are those at the midpoint of the output shaft. If the load position is other than these, or for the allowable thrust load, refer to pages 37 to 45.
5. The lubrication method depends on the model. For details, refer to "Lubrication" on pages 225 to 228.
6. The output shaft speeds (n_2) are based on the motor speed (n_1). For details of the motor speeds, refer to pages 246 to 249.
7. The reduction ratios are nominal. The output speed values (n_2) are calculated based on the actual reduction ratios. (The output speeds in case of reduction ratios 11 to 18 are calculated based on the nominal reduction ratio because the actual ratio of 11 to 18 depends on the frame size). For the actual reduction ratios, refer to page 9.
8. Consult us for the combinations and reduction ratios not listed in the selection tables.
9. The contents of the tables are subject to change without prior notice.
10. AF motors are V/f control inverter drive motors operating at a constant torque between 6 and 60Hz. If the AF motor is operated at a speed lower than a frequency of 6Hz or higher than 60Hz, refer to page 267 for the precautions (for 60 Hz base frequency specification).
11. The marks in the "Options Available" column denote the following:
    ● : manufactured as standard product. △ : Can be manufactured, but consult us because confirmation of the specifications is necessary. ー : Not available.

Selection Tables for Three Phase Gearmotors

Power (kW)	Page
0.1	55
0.2	56
0.25	57
0.4	59
0.55	61
0.75	64
1.1	66
1.5	69
2.2	72
3.0	75
3.7	78
5.5	81
7.5	84
11	88
15	93
18.5	97
22	101
30	105
37	107
45	110
55	111

Selection Tables for AF Gearmotors

Power (kW)	Page
0.1	113
0.2	113
0.4	113
0.75	114
1.5	115
2.2	115
3.7	116
5.5	117
7.5	118
11	119
15	119
18.5	120
22	121
30	122
37	123

Selection Table for Gearmotors

0.1 kW	Frequency	Hz	50Hz	60Hz
	Motor poles	P	4	
	Motor speed n_1	r/min	1450	1750

IMPORTANT :
Please refer to page 54 for Gearmotor Selection Table notes.

Reduction ratio 683 ► 10658

50Hz						60Hz						Model (refer to page 23)	Dimensional Drawing Page	Options Available Note 11	
Output Speed n_2	Output Torque T_{out}		Allowable Radial Load of Output Shaft Pro		SF_G	Output Speed n_2	Output Torque T_{out}		Allowable Radial Load of Output Shaft Pro		SF_G	Capacity Symbol - Frame Size - Reduction Ratio		AF Motor Note 10	High-Efficiency Motor
r/min	N·m	kgf·m	N	kgf		r/min	N·m	kgf·m	N	kgf					
2.12	393	40.1	26300	2680	2.60	2.56	326	33.2	26600	2710	3.13	01 - 4A10DA - 683	125	●	–
1.79	466	47.5	25900	2640	2.19	2.16	386	39.3	26300	2680	2.64	01 - 4A10DA - 809	125	●	–
			25900	2640	2.77				26300	2680	3.34	01 - 4A12DA - 809	125	●	–
1.79	466	47.5	25900	2640	2.77	2.16	386	39.3	26300	2680	3.34	01 - 4A12DA - 809	125	●	–
1.52	551	56.2	25200	2570	1.85	1.83	456	46.5	25900	2640	2.24	01 - 4A10DA - 956	125	●	–
			25200	2570	2.34				25900	2640	2.83	01 - 4A12DA - 956	125	●	–
1.30	643	65.5	24400	2490	1.59	1.57	533	54.3	25400	2590	1.91	01 - 4A10DA - 1117	125	●	–
			24400	2490	2.00				25400	2590	2.42	01 - 4A12DA - 1117	125	●	–
1.10	760	77.5	23100	2350	1.34	1.33	630	64.2	24500	2500	1.62	01 - 4A10DA - 1320	125	●	–
			23100	2350	1.70				24500	2500	2.05	01 - 4A12DA - 1320	125	●	–
			43200	4400	2.82				43700	4450	3.40	01 - 4B12DA - 1320	127	●	–
0.876	954	97.2	20300	2070	1.07	1.06	791	80.6	22700	2310	1.29	01 - 4A10DA - 1656	125	●	–
			20300	2070	1.35				22700	2310	1.63	01 - 4A12DA - 1656	125	●	–
			42300	4310	2.25				43100	4390	2.71	01 - 4B12DA - 1656	127	●	–
			42300	4310	2.69				43100	4390	3.25	01 - 4B14DA - 1656	127	●	–
0.741	1130	115	16700	1700	0.91	0.894	934	95.2	20600	2100	1.09	01 - 4A10DA - 1957	125	●	–
			16700	1700	1.14				20600	2100	1.38	01 - 4A12DA - 1957	125	●	–
			41300	4210	1.90				42400	4320	2.29	01 - 4B12DA - 1957	127	●	–
			41300	4210	2.28				42400	4320	2.75	01 - 4B14DA - 1957	127	●	–
0.638	1310	134	10700	1090	0.99	0.770	1080	110	17700	1800	1.19	01 - 4A12DA - 2272	125	●	–
			40100	4090	1.64				41600	4240	1.98	01 - 4B12DA - 2272	127	●	–
			40100	4090	1.96				41600	4240	2.37	01 - 4B14DA - 2272	127	●	–
0.567	1470	150	38800	3960	1.45	0.684	1220	124	40700	4150	1.75	01 - 4B12DA - 2559	127	●	–
			38800	3960	1.74				40700	4150	2.10	01 - 4B14DA - 2559	127	●	–
0.493	1700	173	36700	3740	1.26	0.595	1410	144	39400	4020	1.53	01 - 4B12DA - 2944	127	●	–
			36700	3740	1.52				39400	4020	1.83	01 - 4B14DA - 2944	127	●	–
			68900	7020	2.75				69800	7120	2.86	01 - 4C14DA - 2944	129	●	–
0.413	2020	206	32700	3330	1.06	0.499	1680	171	36900	3760	1.28	01 - 4B12DA - 3511	127	●	–
			32700	3330	1.27				36900	3760	1.53	01 - 4B14DA - 3511	127	●	–
			67600	6890	2.30				69000	7030	2.78	01 - 4C14DA - 3511	129	●	–
			67600	6890	2.54				69000	7030	3.07	01 - 4C16DA - 3511	129	●	–
0.332	2520	257	23700	2420	0.85	0.401	2080	212	31800	3240	1.03	01 - 4B12DA - 4365	127	●	–
			23700	2420	1.02				31800	3240	1.23	01 - 4B14DA - 4365	127	●	–
			65200	6650	1.85				67300	6860	2.24	01 - 4C14DA - 4365	129	●	–
			65200	6650	2.04				67300	6860	2.47	01 - 4C16DA - 4365	129	●	–
			95000	9680	2.84				96000	9790	3.43	01 - 4D16DA - 4365	131	●	–
0.280	2980	304	62300	6350	1.42	0.338	2470	252	65400	6670	1.72	01 - 4C14DA - 5177	129	●	–
			62300	6350	1.72				65400	6670	2.08	01 - 4C16DA - 5177	129	●	–
			93600	9540	2.34				95100	9690	2.82	01 - 4D16DA - 5177	131	●	–
			93600	9540	2.92				95100	9690	3.53	01 - 4D17DA - 5177	131	●	–
0.201	4170	425	51800	5280	1.12	0.242	3450	352	58800	5990	1.35	01 - 4C14DA - 7228	129	●	–
			51800	5280	1.23				58800	5990	1.49	01 - 4C16DA - 7228	129	●	–
			88700	9040	1.72				91900	9370	2.07	01 - 4D16DA - 7228	131	●	–
			88700	9040	2.09				91900	9370	2.53	01 - 4E17DA - 7228	131	●	–
			97600	9950	2.57				99000	10100	3.10	01 - 4E18DA - 7228	131	●	–
0.136	6140	626	75900	7740	1.14	0.164	5090	519	83600	8520	1.37	01 - 4D16DA - 10658	131	●	–
			75900	7740	1.42				83600	8520	1.71	01 - 4D17DA - 10658	131	●	–
			93600	9540	1.74				95700	9760	2.10	01 - 4E17DA - 10658	131	●	–
			93600	9540	1.89				95700	9760	2.28	01 - 4E18DA - 10658	131	●	–

Selection Table for Gearmotors

0.2 kW	Frequency	Hz	50Hz	60Hz
	Motor poles	P	4	
	Motor speed n_1	r/min	1450	1750

IMPORTANT :
Please refer to page 54 for Gearmotor Selection Table notes.

Reduction ratio 179 ► 2944

50Hz						60Hz						Model (refer to page 23)	Dimensional Drawing Page	Options Available Note 11	
Output Speed n_2	Output Torque T_{out}		Allowable Radial Load of Output Shaft Pro		SF_G	Output Speed n_2	Output Torque T_{out}		Allowable Radial Load of Output Shaft Pro		SF_G	Capacity Symbol - Frame Size - Reduction Ratio		AF Motor Note 10	High-Efficiency Motor
r/min	N·m	kgf·m	N	kgf		r/min	N·m	kgf·m	N	kgf					
8.12	217	22.1	27100	2760	2.80	9.80	180	18.3	27200	2770	2.80	02 - 4A100 - 179	125	●	●
7.02	251	25.6	27000	2750	2.58	8.47	208	21.2	27100	2760	2.58	02 - 4A100 - 207	125	●	●
5.84	302	30.8	26800	2730	2.18	7.04	250	25.5	27000	2750	2.18	02 - 4A100 - 249	125	●	●
			26800	2730	2.53				27000	2750	2.81	02 - 4A105 - 249	125	●	●
4.76	370	37.7	26500	2700	2.17	5.75	306	31.2	26800	2730	2.17	02 - 4A100 - 305	125	●	●
			26500	2700	2.52				26800	2730	2.83	02 - 4A105 - 305	125	●	●
3.98	420	42.8	26100	2660	2.04	4.81	348	35.5	26500	2700	2.04	02 - 4A10DA - 364	125	●	●
3.48	506	51.6	25800	2630	1.05	4.20	419	42.7	26300	2680	1.05	02 - 4A100 - 417	125	●	●
			25800	2630	1.43				26300	2680	1.43	02 - 4A105 - 417	125	●	●
3.42	488	49.7	25700	2620	2.04	4.13	404	41.2	26200	2670	2.04	02 - 4A10DA - 424	125	●	●
			25700	2620	2.64				26200	2670	3.19	02 - 4A12DB - 424	125	●	●
2.90	577	58.8	25000	2550	1.77	3.50	478	48.7	25800	2630	2.04	02 - 4A10DA - 501	125	●	●
			25000	2550	2.04				25800	2630	2.04	02 - 4A12DA - 501	125	●	●
			25000	2550	2.24				25800	2630	2.70	02 - 4A12DB - 501	125	●	●
2.51	666	67.9	24200	2470	1.54	3.03	552	56.3	25200	2570	1.85	02 - 4A10DA - 578	125	●	●
			24200	2470	1.94				25200	2570	2.04	02 - 4A12DA - 578	125	●	●
			43600	4440	2.04				43900	4480	2.04	02 - 4B12DA - 578	127	●	●
2.12	787	80.2	22800	2320	1.30	2.56	652	66.5	24300	2480	1.57	02 - 4A10DA - 683	125	●	●
			22800	2320	1.64				24300	2480	1.98	02 - 4A12DA - 683	125	●	●
			43100	4390	2.04				43600	4440	2.04	02 - 4B12DA - 683	127	●	●
			43100	4390	2.73				43600	4440	3.29	02 - 4B12DB - 683	127	●	●
1.79	932	95.0	20700	2110	1.10	2.16	772	78.7	23000	2340	1.32	02 - 4A10DA - 809	125	●	●
			20700	2110	1.38				23000	2340	1.67	02 - 4A12DA - 809	125	●	●
			42400	4320	2.04				43200	4400	2.04	02 - 4B12DA - 809	127	●	●
			42400	4320	2.30				43200	4400	2.78	02 - 4B12DB - 809	127	●	●
			42400	4320	2.76				43200	4400	3.33	02 - 4B14DB - 809	127	●	●
1.52	1100	112	17300	1760	0.93	1.83	913	93.1	21000	2140	1.12	02 - 4A10DA - 956	125	●	●
			17300	1760	1.17				21000	2140	1.41	02 - 4A12DA - 956	125	●	●
			41500	4230	1.95				42500	4330	2.04	02 - 4B12DA - 956	127	●	●
			41500	4230	2.33				42500	4330	2.82	02 - 4B14DB - 956	127	●	●
1.30	1290	131	11600	1180	1.00	1.57	1070	109	18100	1850	1.21	02 - 4A12DA - 1117	125	●	●
			40300	4110	1.67				41700	4250	2.01	02 - 4B12DA - 1117	127	●	●
			40300	4110	2.00				41700	4250	2.41	02 - 4B14DB - 1117	127	●	●
1.10	1520	155	38400	3910	1.41	1.33	1260	128	40500	4130	1.70	02 - 4B12DA - 1320	127	●	●
			38400	3910	1.69				40500	4130	2.04	02 - 4B14DA - 1320	127	●	●
			69500	7080	2.04				70200	7160	2.04	02 - 4C14DA - 1320	129	●	●
0.876	1910	195	34200	3490	1.13	1.06	1580	161	37800	3850	1.36	02 - 4B12DA - 1656	127	●	●
			34200	3490	1.35				37800	3850	1.63	02 - 4B14DA - 1656	127	●	●
			68100	6940	2.04				69300	7060	2.04	02 - 4C14DA - 1656	129	●	●
			68100	6940	2.45				69300	7060	2.95	02 - 4C14DB - 1656	129	●	●
			68100	6940	2.69				69300	7060	3.25	02 - 4C16DA - 1656	129	●	●
0.741	2260	230	29000	2960	0.95	0.894	1870	191	34700	3540	1.15	02 - 4B12DA - 1957	127	●	●
			29000	2960	1.14				34700	3540	1.38	02 - 4B14DA - 1957	127	●	●
			66600	6790	2.04				68200	6950	2.04	02 - 4C14DA - 1957	129	●	●
			66600	6790	2.07				68200	6950	2.50	02 - 4C14DB - 1957	129	●	●
			66600	6790	2.28				68200	6950	2.75	02 - 4C16DA - 1957	131	●	●
0.638	2620	267	21000	2140	0.82	0.770	2170	221	30500	3110	0.99	02 - 4B12DA - 2272	127	–	–
			64600	6590	1.78				67000	6830	2.04	02 - 4C14DA - 2272	129	●	●
			64600	6590	1.96				67000	6830	2.37	02 - 4C16DA - 2272	129	●	●
			94700	9650	2.73				95900	9780	3.30	02 - 4D16DA - 2272	129	●	●
0.567	2950	301	4890	498	0.87	0.684	2440	249	25400	2590	1.05	02 - 4B14DA - 2559	127	●	●
			62600	6380	1.58				65600	6690	1.91	02 - 4C14DA - 2559	127	●	●
			62600	6380	1.74				65600	6690	2.10	02 - 4C16DA - 2559	129	●	●
			93700	9550	2.43				95200	9700	2.93	02 - 4D16DA - 2559	129	●	●
			93700	9550	2.96				95200	9700	3.57	02 - 4D17DA - 2559	131	●	●
0.493	3390	346	59300	6040	1.38	0.595	2810	286	63500	6470	1.43	02 - 4C14DA - 2944	129	●	●
			59300	6040	1.52				63500	6470	1.83	02 - 4C16DA - 2944	129	●	●
			92100	9390	2.11				94100	9590	2.54	02 - 4D16DA - 2944	131	●	●
			92100	9390	2.57				94100	9590	3.10	02 - 4D17DA - 2944	131	●	●

Selection Table for Gearmotors

0.2 kW

Frequency	Hz	50Hz	60Hz
Motor poles	P	4	
Motor speed n_1	r/min	1450	1750

IMPORTANT :
Please refer to page 54 for Gearmotor Selection Table notes.

Reduction ratio 3511 ► 10658

50Hz						60Hz						Model (refer to page 23)	Dimensional Drawing Page	Options Available Note 11	
Output Speed n_2	Output Torque T_{out}		Allowable Radial Load of Output Shaft Pro		SF_G	Output Speed n_2	Output Torque T_{out}		Allowable Radial Load of Output Shaft Pro		SF_G	Capacity Symbol - Frame Size - Reduction Ratio		AF Motor Note 10	High-Efficiency Motor
r/min	N·m	kgf·m	N	kgf		r/min	N·m	kgf·m	N	kgf					
0.413	4050	413	53100	5410	1.15	0.499	3350	341	59600	6080	1.39	02 - 4C14DA - 3511	129	●	●
			53100	5410	1.27				59600	6080	1.53	02 - 4C16DA - 3511	129	●	●
			89300	9100	1.77				92200	9400	2.13	02 - 4D16DA - 3511	131	●	●
			89300	9100	2.16				92200	9400	2.60	02 - 4D17DA - 3511	131	●	●
			97800	9970	2.64				99200	10100	3.19	02 - 4E17DA - 3511	133	●	●
			97800	9970	2.87				99200	10100	3.46	02 - 4E18DA - 3511	133	●	●
0.332	5030	513	39300	4010	0.93	0.401	4170	425	51700	5270	1.12	02 - 4C14DA - 4365	129	●	●
			39300	4010	1.02				51700	5270	1.23	02 - 4C16DA - 4365	129	●	●
			84000	8560	1.42				88700	9040	1.72	02 - 4D16DA - 4365	131	●	●
			84000	8560	1.73				88700	9040	2.09	02 - 4D17DA - 4365	131	●	●
			95900	9780	2.13				97600	9950	2.57	02 - 4E17DA - 4365	133	●	●
			95900	9780	2.31				97600	9950	2.78	02 - 4E18DA - 4365	133	●	●
0.280	5970	609	8580	875	0.86	0.338	4940	504	40800	4160	1.04	02 - 4C16DA - 5177	129	—	—
			77300	7880	1.17				84500	8610	1.41	02 - 4D16DA - 5177	131	●	●
			77300	7880	1.46				84500	8610	1.76	02 - 4D17DA - 5177	131	●	●
			94000	9580	1.79				96000	9790	2.16	02 - 4E17DA - 5177	133	●	●
			94000	9580	1.94				96000	9790	2.35	02 - 4E18DA - 5177	133	●	●
			133000	13600	2.85				135000	13800	3.44	02 - 4F18DA - 5177	135	●	●
0.201	8330	849	49700	5070	0.86	0.242	6900	703	68800	7010	1.04	02 - 4D16DA - 7228	131	—	—
			49700	5070	1.05				68800	7010	1.26	02 - 4D17DA - 7228	131	●	●
			89300	9100	1.28				92100	9390	1.55	02 - 4E17DA - 7228	133	●	●
			89300	9100	1.39				92100	9390	1.68	02 - 4E18DA - 7228	133	●	●
			129000	13100	2.04				131000	13400	2.47	02 - 4F18DA - 7228	135	●	●
0.136	12300	1250	67000	6830	0.87	0.164	10200	1040	85600	8730	1.05	02 - 4E17DA - 10658	133	—	—
			67000	6830	0.94				85600	8730	1.14	02 - 4E18DA - 10658	133	●	●
			122000	12400	1.39				126000	12800	1.67	02 - 4F18DA - 10658	135	●	●

0.25 kW

Frequency	Hz	50Hz	60Hz
Motor poles	P	4	
Motor speed n_1	r/min	1450	1750

IMPORTANT :
Please refer to page 54 for Gearmotor Selection Table notes.

Reduction ratio 179 ► 501

50Hz						60Hz						Model (refer to page 23)	Dimensional Drawing Page	Options Available Note 11	
Output Speed n_2	Output Torque T_{out}		Allowable Radial Load of Output Shaft Pro		SF_G	Output Speed n_2	Output Torque T_{out}		Allowable Radial Load of Output Shaft Pro		SF_G	Capacity Symbol - Frame Size - Reduction Ratio		AF Motor Not10	High-Efficiency Motor
r/min	N·m	kgf·m	N	kgf		r/min	N·m	kgf·m	N	kgf					
8.12	271	27.6	26900	2740	2.24	9.80	225	22.9	27100	2760	2.24	03 - 4A100 - 179	125	—	—
7.02	313	31.9	26800	2730	2.06	8.47	260	26.5	27000	2750	2.06	03 - 4A100 - 207	125	—	—
			26800	2730	2.72				27000	2750	2.83	03 - 4A105 - 207	125	—	—
5.84	377	38.4	26500	2700	1.74	7.04	313	31.9	26800	2730	1.74	03 - 4A100 - 249	125	—	—
			26500	2700	2.02				26800	2730	2.24	03 - 4A105 - 249	125	—	—
			26500	2700	2.68				26800	2730	2.68	03 - 4A110 - 249	125	—	—
4.76	462	47.1	26000	2650	1.73	5.75	383	39.0	26500	2700	1.73	03 - 4A100 - 305	125	—	—
			26000	2650	2.01				26500	2700	2.26	03 - 4A105 - 305	125	—	—
			26000	2650	2.64				26500	2700	2.64	03 - 4A110 - 305	125	—	—
3.98	524	53.4	25400	2590	1.63	4.81	435	44.3	26100	2660	1.63	03 - 4A10DA - 364	125	—	—
			25400	2590	2.46				26100	2660	2.97	03 - 4A12DB - 364	125	—	—
3.48	632	64.4	24800	2530	0.84	4.20	524	53.4	25600	2610	0.84	03 - 4A100 - 417	125	—	—
			24800	2530	1.14				25600	2610	1.14	03 - 4A105 - 417	125	—	—
3.42	610	62.2	24700	2520	1.63	4.13	506	51.6	25600	2610	1.63	03 - 4A10DA - 424	125	—	—
			24700	2520	2.11				25600	2610	2.55	03 - 4A12DB - 424	125	—	—
2.90	721	73.5	23600	2410	1.42	3.50	597	60.9	24800	2530	1.63	03 - 4A10DA - 501	125	—	—
			23600	2410	1.63				24800	2530	1.63	03 - 4A12DA - 501	125	—	—
			23600	2410	1.79				24800	2530	2.16	03 - 4A12DB - 501	125	—	—
			43400	4420	2.97				43800	4460	3.59	03 - 4B12DB - 501	127	—	—

Selection Table for Gearmotors

0.25 kW	Frequency	Hz	50Hz	60Hz
	Motor poles	P	4	
	Motor speed n_1	r/min	1450	1750

IMPORTANT :
Please refer to page 54 for Gearmotor Selection Table notes.

Reduction ratio 578 ► 4365

50Hz						60Hz						Model (refer to page 23)	Dimensional Drawing Page	Options Available Note 11	
Output Speed n_2	Output Torque T_{out}		Allowable Radial Load of Output Shaft Pro		SF_G	Output Speed n_2	Output Torque T_{out}		Allowable Radial Load of Output Shaft Pro		SF_G	Capacity Symbol - Frame Size - Reduction Ratio		AF Motor Note 10	High-Efficiency Motor
r/min	N·m	kgf·m	N	kgf		r/min	N·m	kgf·m	N	kgf					
2.51	832	84.8	22200	2260	1.23	3.03	689	70.2	23900	2440	1.48	03 - 4A10DA - 578	125	—	—
			22200	2260	1.55				23900	2440	1.63	03 - 4A12DA - 578	125	—	—
			42900	4370	1.63				43500	4430	1.63	03 - 4B12DA - 578	127	—	—
			42900	4370	2.58				43500	4430	3.11	03 - 4B12DB - 578	127	—	—
2.12	983	100	19800	2020	1.04	2.56	815	83.1	22400	2280	1.25	03 - 4A10DA - 683	125	—	—
			19800	2020	1.31				22400	2280	1.58	03 - 4A12DA - 683	125	—	—
			42200	4300	1.63				43000	4380	1.63	03 - 4B12DA - 683	127	—	—
			42200	4300	2.18				43000	4380	2.63	03 - 4B12DB - 683	127	—	—
			42200	4300	2.61				43000	4380	3.15	03 - 4B14DB - 683	127	—	—
1.79	1160	118	15700	1600	0.88	2.16	965	98.4	20100	2050	1.06	03 - 4A10DA - 809	125	—	—
			15700	1600	1.11				20100	2050	1.34	03 - 4A12DA - 809	125	—	—
			41100	4190	1.63				42300	4310	1.63	03 - 4B12DA - 809	127	—	—
			41100	4190	1.84				42300	4310	2.22	03 - 4B12DB - 809	127	—	—
			41100	4190	2.21				42300	4310	2.66	03 - 4B14DB - 809	127	—	—
1.52	1380	141	6830	696	0.94	1.83	1140	116	16300	1660	1.13	03 - 4A12DA - 956	125	—	—
			39600	4040	1.56				41300	4210	1.63	03 - 4B12DA - 956	127	—	—
			39600	4040	1.87				41300	4210	2.25	03 - 4B14DB - 956	127	—	—
1.30	1610	164	37600	3830	1.33	1.57	1330	136	39900	4070	1.61	03 - 4B12DA - 1117	127	—	—
			37600	3830	1.60				39900	4070	1.93	03 - 4B14DB - 1117	127	—	—
			69200	7050	2.90				70000	7140	3.50	03 - 4C14DB - 1117	129	—	—
1.10	1900	194	34300	3500	1.13	1.33	1580	161	37900	3860	1.36	03 - 4B12DA - 1320	127	—	—
			34300	3500	1.35				37900	3860	1.63	03 - 4B14DA - 1320	127	—	—
			68100	6940	1.63				69300	7060	1.63	03 - 4C14DA - 1320	129	—	—
			68100	6940	2.45				69300	7060	2.96	03 - 4C14DB - 1320	129	—	—
0.876	2390	244	26600	2710	0.90	1.06	1980	202	33300	3390	1.08	03 - 4B12DA - 1656	127	—	—
			26600	2710	1.08				33300	3390	1.30	03 - 4B14DA - 1656	127	—	—
			65900	6720	1.63				67800	6910	1.63	03 - 4C14DA - 1656	129	—	—
			65900	6720	1.96				67800	6910	2.36	03 - 4C14DB - 1656	129	—	—
			65900	6720	2.16				67800	6910	2.60	03 - 4C16DA - 1656	129	—	—
0.741	2820	287	13900	1420	0.91	0.894	2340	239	27600	2810	1.10	03 - 4B14DA - 1957	127	—	—
			63400	6460	1.63				66200	6750	1.63	03 - 4C14DA - 1957	129	—	—
			63400	6460	1.82				66200	6750	2.20	03 - 4C16DA - 1957	129	—	—
			94100	9590	2.54				95400	9720	3.06	03 - 4D16DA - 1957	131	—	—
0.638	3270	333	60200	6140	1.42	0.770	2710	276	64100	6530	1.63	03 - 4C14DA - 2272	129	—	—
			60200	6140	1.57				64100	6530	1.90	03 - 4C16DA - 2272	129	—	—
			92500	9430	2.18				94400	9620	2.64	03 - 4D16DA - 2272	131	—	—
			92500	9430	2.66				94400	9620	3.22	03 - 4D17DA - 2272	131	—	—
0.567	3690	376	56700	5780	1.26	0.684	3050	311	61800	6300	1.53	03 - 4C14DA - 2559	129	—	—
			56700	5780	1.39				61800	6300	1.68	03 - 4C16DA - 2559	129	—	—
			90900	9270	1.94				93300	9510	2.34	03 - 4D16DA - 2559	131	—	—
			90900	9270	2.37				93300	9510	2.86	03 - 4D17DA - 2559	131	—	—
			98500	10000	2.90				99800	10200	3.50	03 - 4E17DA - 2559	131	—	—
0.493	4240	432	50900	5190	1.10	0.595	3510	358	58200	5930	1.14	03 - 4C14DA - 2944	129	—	—
			50900	5190	1.21				58200	5930	1.46	03 - 4C16DA - 2944	129	—	—
			88400	9010	1.68				91600	9340	2.03	03 - 4D16DA - 2944	131	—	—
			88400	9010	2.06				91600	9340	2.48	03 - 4D17DA - 2944	131	—	—
			97400	9930	2.52				98900	10100	3.05	03 - 4E17DA - 2944	133	—	—
			97400	9930	2.74				98900	10100	3.30	03 - 4E18DA - 2944	133	—	—
0.413	5060	516	38800	3960	0.92	0.499	4190	427	51500	5250	1.11	03 - 4C14DA - 3511	129	—	—
			38800	3960	1.02				51500	5250	1.23	03 - 4C16DA - 3511	129	—	—
			83800	8540	1.41				88600	9030	1.70	03 - 4D16DA - 3511	131	—	—
			83800	8540	1.72				88600	9030	2.08	03 - 4D17DA - 3511	131	—	—
			95800	9770	2.12				97500	9940	2.55	03 - 4E17DA - 3511	133	—	—
			95800	9770	2.29				97500	9940	2.77	03 - 4E18DA - 3511	133	—	—
0.332	6290	641	74600	7600	1.14	0.401	5210	531	82800	8440	1.37	03 - 4D16DA - 4365	131	—	—
			74600	7600	1.39				82800	8440	1.67	03 - 4D17DA - 4365	131	—	—
			93300	9510	1.70				95500	9730	2.05	03 - 4E17DA - 4365	133	—	—
			93300	9510	1.84				95500	9730	2.23	03 - 4E18DA - 4365	133	—	—
			132000	13500	2.70				134000	13700	3.26	03 - 4F18DA - 4365	135	—	—
			132000	13500	2.77				134000	13700	3.34	03 - 4F19DA - 4365	135	—	—

Selection Table for Gearmotors

0.25 kW

Frequency	Hz	50Hz	60Hz
Motor poles	P	4	
Motor speed n_1	r/min	1450	1750

IMPORTANT :
Please refer to page 54 for Gearmotor Selection Table notes.

Reduction ratio 5177 ► 10658

50Hz						60Hz						Model (refer to page 23)	Dimensional Drawing Page	Options Available Note 11	
Output Speed n_2	Output Torque T_{out}		Allowable Radial Load of Output Shaft Pro		SF_G	Output Speed n_2	Output Torque T_{out}		Allowable Radial Load of Output Shaft Pro		SF_G	Capacity - Frame Size - Reduction Ratio Symbol		AF Motor Note 10	High-Efficiency Motor
r/min	N·m	kgf·m	N	kgf		r/min	N·m	kgf·m	N	kgf					
0.280	7460	760	62400	6360	0.94	0.338	6180	630	75600	7710	1.13	03 - 4D16DA - 5177	131	—	—
			62400	6360	1.17				75600	7710	1.41	03 - 4D17DA - 5177	131	—	—
			91000	9280	1.43				93600	9540	1.73	03 - 4E17DA - 5177	133	—	—
			91000	9280	1.56				93600	9540	1.88	03 - 4E18DA - 5177	133	—	—
			130000	13300	2.28				133000	13600	2.75	03 - 4F18DA - 5177	135	—	—
			130000	13300	2.33				133000	13600	2.82	03 - 4F19DA - 5177	135	—	—
0.201	10400	1060	85100	8670	1.03	0.242	8630	880	88700	9040	1.24	03 - 4E17DA - 7228	133	—	—
			85100	8670	1.11				88700	9040	1.34	03 - 4E18DA - 7228	133	—	—
			125000	12700	1.63				128000	13000	1.97	03 - 4F18DA - 7228	135	—	—
			125000	12700	1.67				128000	13000	2.02	03 - 4F19DA - 7228	135	—	—
0.136	15400	1570	117000	11900	1.11	0.164	12700	1290	121000	12300	1.34	03 - 4F18DA - 10658	135	—	—
			117000	11900	1.13				121000	12300	1.37	03 - 4F19DA - 10658	135	—	—

0.4 kW

Frequency	Hz	50Hz	60Hz
Motor poles	P	4	
Motor speed n_1	r/min	1450	1750

IMPORTANT :
Please refer to page 54 for Gearmotor Selection Table notes.

Reduction ratio 112 ► 424

50Hz						60Hz						Model (refer to page 23)	Dimensional Drawing Page	Options Available Note 11	
Output Speed n_2	Output Torque T_{out}		Allowable Radial Load of Output Shaft Pro		SF_G	Output Speed n_2	Output Torque T_{out}		Allowable Radial Load of Output Shaft Pro		SF_G	Capacity - Frame Size - Reduction Ratio Symbol		AF Motor Note 10	High-Efficiency Motor
r/min	N·m	kgf·m	N	kgf		r/min	N·m	kgf·m	N	kgf					
12.9	272	27.7	26900	2740	2.44	15.6	225	22.9	27100	2760	2.44	05 - 4A100 - 112	125	●	●
			26900	2740	3.00				27100	2760	3.00	05 - 4A105 - 112	125	●	●
11.8	298	30.4	26800	2730	2.44	14.3	247	25.2	27000	2750	2.44	05 - 4A100 - 123	125	●	●
			26800	2730	3.00				27000	2750	3.00	05 - 4A105 - 123	125	●	●
9.63	366	37.3	26500	2700	1.95	11.6	303	30.9	26800	2730	1.95	05 - 4A100 - 151	125	●	●
			26500	2700	2.70				26800	2730	2.70	05 - 4A105 - 151	125	●	●
8.12	434	44.2	26200	2670	1.40	9.80	359	36.6	26600	2710	1.40	05 - 4A100 - 179	125	●	●
			26200	2670	1.94				26600	2710	1.94	05 - 4A105 - 179	125	●	●
			26200	2670	2.36				26600	2710	2.36	05 - 4A110 - 179	125	●	●
			26200	2670	2.78				26600	2710	2.78	05 - 4A115 - 179	125	●	●
			26200	2670	2.98				26600	2710	2.98	05 - 4A120 - 179	125	●	●
7.02	502	51.2	25800	2630	1.29	8.47	416	42.4	26300	2680	1.29	05 - 4A100 - 207	125	●	●
			25800	2630	1.70				26300	2680	1.77	05 - 4A105 - 207	125	●	●
			25800	2630	2.15				26300	2680	2.15	05 - 4A110 - 207	125	●	●
			25800	2630	2.53				26300	2680	2.53	05 - 4A115 - 207	125	●	●
			25800	2630	2.57				26300	2680	2.57	05 - 4A120 - 207	125	●	●
5.84	604	61.6	25000	2550	1.09	7.04	500	51.0	25800	2630	1.09	05 - 4A100 - 249	125	●	●
			25000	2550	1.27				25800	2630	1.40	05 - 4A105 - 249	125	●	●
			25000	2550	1.67				25800	2630	1.67	05 - 4A110 - 249	125	●	●
			25000	2550	1.90				25800	2630	1.90	05 - 4A115 - 249	125	●	●
			25000	2550	2.14				25800	2630	2.14	05 - 4A120 - 249	125	●	●
			43900	4480	2.39				44100	4500	2.39	05 - 4B120 - 249	127	●	●
4.76	740	75.4	23800	2430	1.08	5.75	613	62.5	25000	2550	1.08	05 - 4A100 - 305	125	●	●
			23800	2430	1.26				25000	2550	1.41	05 - 4A105 - 305	125	●	●
			23800	2430	1.65				25000	2550	1.65	05 - 4A110 - 305	125	●	●
			23800	2430	1.74				25000	2550	1.74	05 - 4A115 - 305	125	●	●
			43400	4420	2.36				43800	4460	2.36	05 - 4B120 - 305	127	●	●
3.98	839	85.5	22100	2250	1.02	4.81	695	70.8	23900	2440	1.02	05 - 4A10DA - 364	125	●	●
			22100	2250	1.54				23900	2440	1.86	05 - 4A12DB - 364	125	●	●
			42900	4370	2.55				43500	4430	3.08	05 - 4B12DB - 364	127	●	●
3.42	976	99.5	19900	2030	1.02	4.13	809	82.5	22500	2290	1.02	05 - 4A10DA - 424	125	●	●
			19900	2030	1.32				22500	2290	1.59	05 - 4A12DB - 424	125	●	●
			42200	4300	2.17				43000	4380	2.63	05 - 4B12DB - 424	127	●	●
			42200	4300	2.63				43000	4380	3.18	05 - 4B14DB - 424	127	●	●

Selection Table for Gearmotors

0.4 kW	Frequency	Hz	50Hz	60Hz
	Motor poles	P	4	
	Motor speed n_1	r/min	1450	1750

IMPORTANT :
Please refer to page 54 for Gearmotor Selection Table notes.

Reduction ratio 501 ► 2944

50Hz						60Hz						Model (refer to page 23)	Dimensional Drawing Page	Options Available Note 11	
Output Speed n_2	Output Torque T_{out}		Allowable Radial Load of Output Shaft Pro		SF_G	Output Speed n_2	Output Torque T_{out}		Allowable Radial Load of Output Shaft Pro		SF_G	Capacity Symbol - Frame Size - Reduction Ratio		AF Motor Note 10	High-Efficiency Motor
r/min	N·m	kgf·m	N	kgf		r/min	N·m	kgf·m	N	kgf					
2.90	1150	117	16000	1630	0.89	3.50	956	97.5	20300	2070	1.02	05 - 4A10DA - 501	125	●	●
			16000	1630	1.02				20300	2070	1.02	05 - 4A12DA - 501	125	●	●
			41200	4200	1.86				42300	4310	2.24	05 - 4B12DB - 501	127	●	●
			41200	4200	2.23				42300	4310	2.69	05 - 4B14DB - 501	127	●	●
2.51	1330	136	9600	979	0.97	3.03	1100	112	17300	1760	1.02	05 - 4A12DA - 578	125	●	●
			39900	4070	1.02				41500	4230	1.02	05 - 4B12DA - 578	127	●	●
			39900	4070	1.61				41500	4230	1.94	05 - 4B12DB - 578	127	●	●
			39900	4070	1.93				41500	4230	2.33	05 - 4B14DB - 578	127	●	●
2.12	1570	160	37900	3860	1.02	2.56	1300	133	40100	4090	1.02	05 - 4B12DA - 683	127	●	●
			37900	3860	1.36				40100	4090	1.65	05 - 4B12DB - 683	127	●	●
			37900	3860	1.63				40100	4090	1.97	05 - 4B14DB - 683	127	●	●
			69300	7060	2.93				70100	7150	3.55	05 - 4C14DB - 683	129	●	●
1.79	1860	190	34800	3550	1.02	2.16	1540	157	38200	3890	1.02	05 - 4B12DA - 809	127	●	●
			34800	3550	1.38				38200	3890	1.66	05 - 4B14DB - 809	127	●	●
			68300	6960	2.44				69400	7070	2.95	05 - 4C14DB - 809	129	●	●
1.52	2200	224	29900	3050	0.97	1.83	1830	187	35200	3590	1.02	05 - 4B12DA - 956	127	●	●
			29900	3050	1.17				35200	3590	1.41	05 - 4B14DB - 956	127	●	●
			66800	6810	2.07				68400	6970	2.50	05 - 4C14DB - 956	129	●	●
			66800	6810	2.33				68400	6970	2.82	05 - 4C16DA - 956	129	●	●
1.30	2570	262	22200	2260	0.83	1.57	2130	217	31100	3170	1.01	05 - 4B12DA - 1117	127	●	●
			22200	2260	1.00				31100	3170	1.21	05 - 4B14DB - 1117	127	●	●
			64900	6620	1.81				67100	6840	2.19	05 - 4C14DB - 1117	129	●	●
			64900	6620	2.00				67100	6840	2.41	05 - 4C16DA - 1117	129	●	●
			94800	9660	2.78				95900	9780	3.35	05 - 4D16DA - 1117	131	●	●
1.10	3040	310	61900	6310	1.02	1.33	2520	257	65200	6650	1.02	05 - 4C14DA - 1320	129	●	●
			61900	6310	1.53				65200	6650	1.85	05 - 4C14DB - 1320	129	●	●
			61900	6310	1.69				65200	6650	2.04	05 - 4C16DA - 1320	129	●	●
			93400	9520	2.35				95000	9680	2.83	05 - 4D16DA - 1320	131	●	●
			93400	9520	2.87				95000	9680	3.46	05 - 4D17DA - 1320	131	●	●
0.876	3820	389	55500	5660	1.02	1.06	3160	322	61100	6230	1.02	05 - 4C14DA - 1656	129	●	●
			55500	5660	1.35				61100	6230	1.63	05 - 4C16DA - 1656	129	●	●
			90400	9220	1.87				92900	9470	2.26	05 - 4D16DA - 1656	131	●	●
			90400	9220	2.28				92900	9470	2.76	05 - 4D17DA - 1656	131	●	●
			98300	10000	2.80				99600	10200	3.38	05 - 4E17DA - 1656	133	●	●
0.741	4510	460	47500	4840	1.02	0.894	3740	381	56200	5730	1.02	05 - 4C14DA - 1957	129	●	●
			87000	8870	1.59				90700	9250	1.91	05 - 4D16DA - 1957	131	●	●
			87000	8870	1.93				90700	9250	2.33	05 - 4D17DA - 1957	131	●	●
			96900	9880	2.37				98400	10000	2.86	05 - 4E17DA - 1957	133	●	●
			96900	9880	2.57				98400	10000	3.10	05 - 4E18DA - 1957	133	●	●
0.638	5240	534	35200	3590	0.89	0.770	4340	442	49700	5070	1.02	05 - 4C14DA - 2272	129	●	●
			82600	8420	1.37				87900	8960	1.65	05 - 4D16DA - 2272	131	●	●
			82600	8420	1.67				87900	8960	2.01	05 - 4D17DA - 2272	131	●	●
			95400	9720	2.04				97200	9910	2.47	05 - 4E17DA - 2272	133	●	●
			95400	9720	2.22				97200	9910	2.67	05 - 4E18DA - 2272	133	●	●
0.567	5900	601	13800	1410	0.87	0.684	4890	498	41800	4260	1.05	05 - 4C16DA - 2559	129	●	●
			77900	7940	1.21				84800	8640	1.46	05 - 4D16DA - 2559	131	●	●
			77900	7940	1.48				84800	8640	1.78	05 - 4D17DA - 2559	131	●	●
			94100	9590	1.81				96100	9800	2.19	05 - 4E17DA - 2559	133	●	●
			94100	9590	1.97				96100	9800	2.37	05 - 4E18DA - 2559	133	●	●
			133000	13600	2.88				135000	13800	3.48	05 - 4F18DA - 2559	135	●	●
			133000	13600	2.95				135000	13800	3.56	05 - 4F19DA - 2559	135	●	●
0.493	6790	692	70000	7140	1.05	0.595	5620	573	80000	8150	1.27	05 - 4D16DA - 2944	131	●	●
			70000	7140	1.29				80000	8150	1.55	05 - 4D17DA - 2944	131	●	●
			92400	9420	1.58				94700	9650	1.90	05 - 4E17DA - 2944	133	●	●
			92400	9420	1.71				94700	9650	2.06	05 - 4E18DA - 2944	133	●	●
			132000	13500	2.50				134000	13700	3.03	05 - 4F18DA - 2944	135	●	●
			132000	13500	2.56				134000	13700	3.09	05 - 4F19DA - 2944	135	●	●

Selection Table for Gearmotors

0.4 kW

Frequency	Hz	50Hz	60Hz
Motor poles	P	4	
Motor speed n_1	r/min	1450	1750

IMPORTANT :
Please refer to page 54 for Gearmotor Selection Table notes.

Reduction ratio 3511 ► 7228

50Hz						60Hz						Model (refer to page 23)	Dimensional Drawing Page	Options Available Note 11	
Output Speed n_2	Output Torque T_{out}		Allowable Radial Load of Output Shaft Pro		SF_G	Output Speed n_2	Output Torque T_{out}		Allowable Radial Load of Output Shaft Pro		SF_G	Capacity - Frame Size - Reduction Ratio		AF Motor Note 10	High-Efficiency Motor
r/min	N·m	kgf·m	N	kgf		r/min	N·m	kgf·m	N	kgf					
0.413	8090	825	53600	5460	0.88	0.499	6710	684	70800	7220	1.07	05 - 4D16DA - 3511	131	●	●
			53600	5460	1.08				70800	7220	1.30	05 - 4D17DA - 3511	131	●	●
			89700	9140	1.32				92500	9430	1.60	05 - 4E17DA - 3511	133	●	●
			89700	9140	1.43				92500	9430	1.73	05 - 4E18DA - 3511	133	●	●
			129000	13100	2.10				132000	13500	2.53	05 - 4F18DA - 3511	135	●	●
			129000	13100	2.15				132000	13500	2.60	05 - 4F19DA - 3511	135	●	●
0.332	10100	1030	85800	8750	1.06	0.401	8340	850	89300	9100	1.28	05 - 4E17DA - 4365	133	●	●
			85800	8750	1.15				89300	9100	1.39	05 - 4E18DA - 4365	133	●	●
			126000	12800	1.69				129000	13100	2.04	05 - 4F18DA - 4365	135	●	●
			126000	12800	1.73				129000	13100	2.09	05 - 4F19DA - 4365	135	●	●
0.280	11900	1210	71600	7300	0.90	0.338	9890	1010	86200	8790	1.08	05 - 4E17DA - 5177	133	●	●
			71600	7300	0.97				86200	8790	1.17	05 - 4E18DA - 5177	133	●	●
			123000	12500	1.43				126000	12800	1.72	05 - 4F18DA - 5177	135	●	●
			123000	12500	1.46				126000	12800	1.76	05 - 4F19DA - 5177	135	●	●
0.201	16700	1700	115000	11700	1.02	0.242	13800	1410	120000	12200	1.23	05 - 4F18DA - 7228	135	●	●
			115000	11700	1.04				120000	12200	1.26	05 - 4F19DA - 7228	135	●	●

0.55 kW

Frequency	Hz	50Hz	60Hz
Motor poles	P	4	
Motor speed n_1	r/min	1450	1750

IMPORTANT :
Please refer to page 54 for Gearmotor Selection Table notes.

Reduction ratio 80 ► 249

50Hz						60Hz						Model (refer to page 23)	Dimensional Drawing Page	Options Available Note 11	
Output Speed n_2	Output Torque T_{out}		Allowable Radial Load of Output Shaft Pro		SF_G	Output Speed n_2	Output Torque T_{out}		Allowable Radial Load of Output Shaft Pro		SF_G	Capacity - Frame Size - Reduction Ratio		AF Motor Note 10	High-Efficiency Motor
r/min	N·m	kgf·m	N	kgf		r/min	N·m	kgf·m	N	kgf					
18.1	267	27.2	26900	2740	2.31	21.9	221	22.5	27100	2760	2.31	08 - 4A100 - 80	125	—	—
16.6	292	29.8	26800	2730	2.31	20.0	242	24.7	27000	2750	2.31	08 - 4A100 - 88	125	—	—
14.3	339	34.6	26700	2720	2.20	17.2	281	28.6	26900	2740	2.20	08 - 4A100 - 102	125	—	—
			26700	2720	2.89				26900	2740	2.89	08 - 4A105 - 102	125	—	—
12.9	374	38.1	26500	2700	1.77	15.6	310	31.6	26800	2730	1.77	08 - 4A100 - 112	125	—	—
			26500	2700	2.18				26800	2730	2.18	08 - 4A105 - 112	125	—	—
			26500	2700	2.73				26800	2730	2.73	08 - 4A110 - 112	125	—	—
11.8	409	41.7	26300	2680	1.77	14.3	339	34.6	26700	2720	1.77	08 - 4A100 - 123	125	—	—
			26300	2680	2.18				26700	2720	2.18	08 - 4A105 - 123	125	—	—
			26300	2680	2.73				26700	2720	2.73	08 - 4A110 - 123	125	—	—
9.63	503	51.3	25800	2630	1.42	11.6	416	42.4	26300	2680	1.42	08 - 4A100 - 151	125	—	—
			25800	2630	1.96				26300	2680	1.96	08 - 4A105 - 151	125	—	—
			25800	2630	2.36				26300	2680	2.36	08 - 4A110 - 151	125	—	—
8.12	596	60.8	25100	2560	1.02	9.80	494	50.4	25800	2630	1.02	08 - 4A100 - 179	125	—	—
			25100	2560	1.41				25800	2630	1.41	08 - 4A105 - 179	125	—	—
			25100	2560	1.72				25800	2630	1.72	08 - 4A110 - 179	125	—	—
			25100	2560	2.02				25800	2630	2.02	08 - 4A115 - 179	125	—	—
			43900	4480	2.96				44100	4500	3.13	08 - 4B120 - 179	127	—	—
7.02	690	70.3	24300	2480	0.94	8.47	571	58.2	25300	2580	0.94	08 - 4A100 - 207	125	—	—
			24300	2480	1.24				25300	2580	1.29	08 - 4A105 - 207	125	—	—
			24300	2480	1.56				25300	2580	1.56	08 - 4A110 - 207	125	—	—
			24300	2480	1.87				25300	2580	1.87	08 - 4A120 - 207	125	—	—
			43600	4440	2.36				43900	4480	2.36	08 - 4B120 - 207	127	—	—
5.84	830	84.6	22800	2320	0.92	7.04	688	70.1	24300	2480	1.02	08 - 4A105 - 249	125	—	—
			22800	2320	1.22				24300	2480	1.22	08 - 4A110 - 249	125	—	—
			22800	2320	1.38				24300	2480	1.38	08 - 4A115 - 249	125	—	—
			22800	2320	1.55				24300	2480	1.55	08 - 4A120 - 249	125	—	—
			43100	4390	1.74				43600	4440	1.74	08 - 4B120 - 249	127	—	—
			43100	4390	2.07				43600	4440	2.18	08 - 4B125 - 249	127	—	—

Selection Table for Gearmotors

0.55 kW	Frequency	Hz	50Hz	60Hz
	Motor poles	P	4	
	Motor speed n_1	r/min	1450	1750

IMPORTANT :
Please refer to page 54 for Gearmotor Selection Table notes.

Reduction ratio 80 ► 809

50Hz						60Hz						Model (refer to page 23)	Dimensional Drawing Page	Options Available Note 11	
Output Speed n_2	Output Torque T_{out}		Allowable Radial Load of Output Shaft Pro		SF_G	Output Speed n_2	Output Torque T_{out}		Allowable Radial Load of Output Shaft Pro		SF_G	Capacity Symbol - Frame Size - Reduction Ratio		AF Motor Note 10	High-Efficiency Motor
r/min	N·m	kgf·m	N	kgf		r/min	N·m	kgf·m	N	kgf					
18.1	267	27.2	26900	2740	2.31	21.9	221	22.5	27100	2760	2.31	08 - 4A100 - 80	125	—	—
16.6	292	29.8	26800	2730	2.31	20.0	242	24.7	27000	2750	2.31	08 - 4A100 - 88	125	—	—
14.3	339	34.6	26700	2720	2.20	17.2	281	28.6	26900	2740	2.20	08 - 4A100 - 102	125	—	—
			26700	2720	2.89				26900	2740	2.89	08 - 4A105 - 102	125	—	—
12.9	374	38.1	26500	2700	1.77	15.6	310	31.6	26800	2730	1.77	08 - 4A100 - 112	125	—	—
			26500	2700	2.18				26800	2730	2.18	08 - 4A105 - 112	125	—	—
			26500	2700	2.73				26800	2730	2.73	08 - 4A110 - 112	125	—	—
11.8	409	41.7	26300	2680	1.77	14.3	339	34.6	26700	2720	1.77	08 - 4A100 - 123	125	—	—
			26300	2680	2.18				26700	2720	2.18	08 - 4A105 - 123	125	—	—
			26300	2680	2.73				26700	2720	2.73	08 - 4A110 - 123	125	—	—
9.63	503	51.3	25800	2630	1.42	11.6	416	42.4	26300	2680	1.42	08 - 4A100 - 151	125	—	—
			25800	2630	1.96				26300	2680	1.96	08 - 4A105 - 151	125	—	—
			25800	2630	2.36				26300	2680	2.36	08 - 4A110 - 151	125	—	—
8.12	596	60.8	25100	2560	1.02	9.80	494	50.4	25800	2630	1.02	08 - 4A100 - 179	125	—	—
			25100	2560	1.41				25800	2630	1.41	08 - 4A105 - 179	125	—	—
			25100	2560	1.72				25800	2630	1.72	08 - 4A110 - 179	125	—	—
			25100	2560	2.02				25800	2630	2.02	08 - 4A115 - 179	125	—	—
			43900	4480	2.96				44100	4500	3.13	08 - 4B120 - 179	127	—	—
7.02	690	70.3	24300	2480	0.94	8.47	571	58.2	25300	2580	0.94	08 - 4A100 - 207	125	—	—
			24300	2480	1.24				25300	2580	1.29	08 - 4A105 - 207	125	—	—
			24300	2480	1.56				25300	2580	1.56	08 - 4A110 - 207	125	—	—
			24300	2480	1.87				25300	2580	1.87	08 - 4A120 - 207	125	—	—
			43600	4440	2.36				43900	4480	2.36	08 - 4B120 - 207	127	—	—
5.84	830	84.6	22800	2320	0.92	7.04	688	70.1	24300	2480	1.02	08 - 4A105 - 249	125	—	—
			22800	2320	1.22				24300	2480	1.22	08 - 4A110 - 249	125	—	—
			22800	2320	1.38				24300	2480	1.38	08 - 4A115 - 249	125	—	—
			22800	2320	1.55				24300	2480	1.55	08 - 4A120 - 249	125	—	—
			43100	4390	1.74				43600	4440	1.74	08 - 4B120 - 249	127	—	—
			43100	4390	2.07				43600	4440	2.18	08 - 4B125 - 249	127	—	—
4.76	1020	104	20100	2050	0.92	5.75	843	85.9	22600	2300	1.03	08 - 4A105 - 305	125	—	—
			20100	2050	1.27				22600	2300	1.27	08 - 4A115 - 305	125	—	—
			42300	4310	1.72				43000	4380	1.72	08 - 4B120 - 305	127	—	—
			42300	4310	1.87				43000	4380	2.05	08 - 4B125 - 305	127	—	—
			42300	4310	2.53				43000	4380	2.53	08 - 4B140 - 305	127	—	—
3.98	1150	117	16000	1630	1.12	4.81	956	97.5	20300	2070	1.35	08 - 4A12DB - 364	125	—	—
			41200	4200	1.85				42300	4310	2.24	08 - 4B12DB - 364	127	—	—
			41200	4200	2.23				42300	4310	2.69	08 - 4B14DB - 364	127	—	—
			70500	7190	2.76				70900	7230	2.76	08 - 4C14DB - 364	129	—	—
3.42	1340	137	9010	918	0.96	4.13	1110	113	17000	1730	1.16	08 - 4A12DB - 424	125	—	—
			39900	4070	1.58				41400	4220	1.91	08 - 4B12DB - 424	127	—	—
			39900	4070	1.91				41400	4220	2.31	08 - 4B14DB - 424	127	—	—
			70000	7140	2.76				70600	7200	2.76	08 - 4C14DB - 424	129	—	—
2.90	1590	162	37800	3850	1.35	3.50	1310	134	40100	4090	1.63	08 - 4B12DB - 501	127	—	—
			37800	3850	1.62				40100	4090	1.96	08 - 4B14DB - 501	127	—	—
			69300	7060	2.76				70100	7150	2.76	08 - 4C14DB - 501	129	—	—
2.51	1830	187	35200	3590	1.17	3.03	1520	155	38400	3910	1.41	08 - 4B12DB - 578	127	—	—
			35200	3590	1.40				38400	3910	1.69	08 - 4B14DB - 578	127	—	—
			68400	6970	2.53				69500	7080	2.76	08 - 4C14DB - 578	129	—	—
			68400	6970	2.76				69500	7080	2.76	08 - 4C16DA - 578	129	—	—
2.12	2160	220	30600	3120	0.99	2.56	1790	182	35600	3630	1.20	08 - 4B12DB - 683	127	—	—
			30600	3120	1.19				35600	3630	1.43	08 - 4B14DB - 683	127	—	—
			67000	6830	2.13				68500	6980	2.58	08 - 4C14DB - 683	129	—	—
			67000	6830	2.38				68500	6980	2.76	08 - 4C16DA - 683	129	—	—
			95900	9780	2.76				96700	9860	2.76	08 - 4D16DA - 683	131	—	—
1.79	2560	261	22500	2290	0.84	2.16	2120	216	31200	3180	1.01	08 - 4B12DB - 809	127	—	—
			22500	2290	1.00				31200	3180	1.21	08 - 4B14DB - 809	127	—	—
			64900	6620	1.78				67200	6850	2.15	08 - 4C14DB - 809	129	—	—
			64900	6620	2.01				67200	6850	2.42	08 - 4C16DA - 809	129	—	—
			94800	9660	2.76				96000	9790	2.76	08 - 4D16DA - 809	131	—	—

Selection Table for Gearmotors

0.55 kW	Frequency	Hz	50Hz	60Hz
	Motor poles	P	4	
	Motor speed n_1	r/min	1450	1750

IMPORTANT :
Please refer to page 54 for Gearmotor Selection Table notes.

Reduction ratio 956 ► 5177

50Hz						60Hz						Model (refer to page 23)	Dimensional Drawing Page	Options Available Note 11	
Output Speed n_2	Output Torque T_{out}		Allowable Radial Load of Output Shaft Pro		SF_G	Output Speed n_2	Output Torque T_{out}		Allowable Radial Load of Output Shaft Pro		SF_G	Capacity Symbol - Frame Size - Reduction Ratio		AF Motor Note 10	High-Efficiency Motor
r/min	N·m	kgf·m	N	kgf		r/min	N·m	kgf·m	N	kgf					
1.52	3030	309	62000	6320	1.50	1.83	2510	256	65200	6650	1.81	08 - 4C14DB - 956	129	—	—
			62000	6320	1.70				65200	6650	2.05	08 - 4C16DA - 956	129	—	—
			93400	9520	2.36				95000	9680	2.76	08 - 4D16DA - 956	131	—	—
			93400	9520	2.88				95000	9680	3.47	08 - 4D17DB - 956	131	—	—
1.30	3540	361	58000	5910	1.32	1.57	2930	299	62700	6390	1.59	08 - 4C14DB - 1117	129	—	—
			91500	9330	2.02				93700	9550	2.44	08 - 4D16DA - 1117	131	—	—
			91500	9330	2.46				93700	9550	2.76	08 - 4D17DA - 1117	131	—	—
1.10	4180	426	51600	5260	1.11	1.33	3470	354	58700	5980	1.35	08 - 4C14DB - 1320	129	—	—
			88700	9040	1.71				91800	9360	2.05	08 - 4D16DA - 1320	131	—	—
			88700	9040	2.08				91800	9360	2.52	08 - 4D17DA - 1320	131	—	—
			97500	9940	2.56				99000	10100	2.76	08 - 4E17DA - 1320	133	—	—
			97500	9940	2.77				99000	10100	3.35	08 - 4E18DA - 1320	133	—	—
0.876	5250	535	35000	3570	0.89	1.06	4350	443	49600	5060	1.07	08 - 4C14DB - 1656	129	—	—
			82600	8420	1.36				87800	8950	1.64	08 - 4D16DA - 1656	131	—	—
			82600	8420	1.66				87800	8950	2.01	08 - 4D17DA - 1656	131	—	—
			95400	9720	2.04				97200	9910	2.46	08 - 4E17DA - 1656	133	—	—
			95400	9720	2.21				97200	9910	2.67	08 - 4E18DA - 1656	133	—	—
0.741	6200	632	75400	7690	1.15	0.894	5140	524	83300	8490	1.39	08 - 4D16DA - 1957	131	—	—
			75400	7690	1.41				83300	8490	1.70	08 - 4D17DA - 1957	131	—	—
			93500	9530	1.73				95600	9750	2.08	08 - 4E17DA - 1957	133	—	—
			93500	9530	1.87				95600	9750	2.26	08 - 4E18DA - 1957	133	—	—
			133000	13600	2.75				134000	13700	3.31	08 - 4F18DA - 1957	135	—	—
			133000	13600	2.81				134000	13700	3.39	08 - 4F19DA - 1957	135	—	—
0.638	7200	734	65500	6680	0.99	0.770	5970	609	77300	7880	1.20	08 - 4D16DA - 2272	131	—	—
			65500	6680	1.21				77300	7880	1.46	08 - 4D17DA - 2272	131	—	—
			91500	9330	1.49				94000	9580	1.79	08 - 4E17DA - 2272	133	—	—
			91500	9330	1.61				94000	9580	1.94	08 - 4E18DA - 2272	133	—	—
			131000	13400	2.36				133000	13600	2.85	08 - 4F18DA - 2272	135	—	—
			131000	13400	2.42				133000	13600	2.92	08 - 4F19DA - 2272	135	—	—
0.567	8110	827	53300	5430	0.88	0.684	6720	685	70600	7200	1.06	08 - 4D16DA - 2559	131	—	—
			53300	5430	1.08				70600	7200	1.30	08 - 4D17DA - 2559	131	—	—
			89700	9140	1.32				92500	9430	1.59	08 - 4E17DA - 2559	133	—	—
			89700	9140	1.43				92500	9430	1.73	08 - 4E18DA - 2559	133	—	—
			129000	13100	2.09				132000	13500	2.53	08 - 4F18DA - 2559	135	—	—
			129000	13100	2.15				132000	13500	2.59	08 - 4F19DA - 2559	135	—	—
0.493	9330	951	25200	2570	0.94	0.595	7730	788	58900	6000	1.13	08 - 4D17DA - 2944	131	—	—
			87300	8900	1.15				90500	9230	1.38	08 - 4E17DA - 2944	133	—	—
			87300	8900	1.24				90500	9230	1.50	08 - 4E18DA - 2944	133	—	—
			127000	12900	1.82				130000	13300	2.20	08 - 4F18DA - 2944	135	—	—
			127000	12900	1.87				130000	13300	2.25	08 - 4F19DA - 2944	135	—	—
0.413	11100	1130	80800	8240	0.96	0.499	9220	940	87500	8920	1.16	08 - 4E17DA - 3511	133	—	—
			80800	8240	1.04				87500	8920	1.26	08 - 4E18DA - 3511	133	—	—
			124000	12600	1.53				127000	12900	1.84	08 - 4F18DA - 3511	135	—	—
			124000	12600	1.56				127000	12900	1.89	08 - 4F19DA - 3511	135	—	—
0.332	13800	1410	38100	3880	0.84	0.401	11500	1170	77200	7870	1.01	08 - 4E18DA - 4365	133	—	—
			120000	12200	1.23				124000	12600	1.48	08 - 4F18DA - 4365	135	—	—
			120000	12200	1.26				124000	12600	1.52	08 - 4F19DA - 4365	135	—	—
0.280	16400	1670	115000	11700	1.04	0.338	13600	1390	120000	12200	1.25	08 - 4F18DA - 5177	135	—	—
			115000	11700	1.06				120000	12200	1.28	08 - 4F19DA - 5177	135	—	—

Selection Table for Gearmotors

0.75 kW	Frequency	Hz	50Hz	60Hz
	Motor poles	P	4	
	Motor speed n_1	r/min	1450	1750

IMPORTANT :
Please refer to page 54 for Gearmotor Selection Table notes.

Reduction ratio 60 ► 424

50Hz						60Hz						Model (refer to page 23)	Dimensional Drawing Page	Options Available Note 9	
Output Speed n_2	Output Torque T_{out}		Allowable Radial Load of Output Shaft Pro		SF_G	Output Speed n_2	Output Torque T_{out}		Allowable Radial Load of Output Shaft Pro		SF_G	Capacity Symbol - Frame Size - Reduction Ratio		AF Motor Note 8	High-Efficiency Motor
r/min	N·m	kgf·m	N	kgf		r/min	N·m	kgf·m	N	kgf					
24.4	271	27.6	26900	2740	2.65	29.4	225	22.9	27100	2760	2.65	1 - 4A100 - 60	125	●	●
21.6	306	31.2	26800	2730	2.53	26.0	254	25.9	27000	2750	2.57	1 - 4A100 - 67	125	●	●
19.7	335	34.1	26700	2720	2.53	23.8	277	28.2	26900	2740	2.57	1 - 4A100 - 74	125	●	●
18.1	364	37.1	26500	2700	1.69	21.9	302	30.8	26800	2730	1.69	1 - 4A100 - 80	125	●	●
			26500	2700	2.23				26800	2730	2.23	1 - 4A105 - 80	125	●	●
			26500	2700	2.55				26800	2730	2.55	1 - 4A110 - 80	125	●	●
			26500	2700	2.96				26800	2730	2.96	1 - 4A115 - 80	125	●	●
16.6	399	40.7	26400	2690	1.69	20.0	330	33.6	26700	2720	1.69	1 - 4A100 - 88	125	●	●
			26400	2690	2.23				26700	2720	2.23	1 - 4A105 - 88	125	●	●
			26400	2690	2.55				26700	2720	2.55	1 - 4A110 - 88	125	●	●
			26400	2690	2.96				26700	2720	2.96	1 - 4A115 - 88	125	●	●
14.3	462	47.1	26000	2650	1.61	17.2	383	39.0	26500	2700	1.61	1 - 4A100 - 102	125	●	●
			26000	2650	2.12				26500	2700	2.12	1 - 4A105 - 102	125	●	●
			26000	2650	2.53				26500	2700	2.53	1 - 4A110 - 102	125	●	●
			26000	2650	2.79				26500	2700	2.79	1 - 4A115 - 102	125	●	●
12.9	510	52.0	25700	2620	1.30	15.6	423	43.1	26300	2680	1.30	1 - 4A100 - 112	125	●	●
			25700	2620	1.60				26300	2680	1.60	1 - 4A105 - 112	125	●	●
			25700	2620	2.00				26300	2680	2.00	1 - 4A110 - 112	125	●	●
			25700	2620	2.41				26300	2680	2.41	1 - 4A115 - 112	125	●	●
			25700	2620	2.53				26300	2680	2.53	1 - 4A120 - 112	125	●	●
11.8	558	56.9	25400	2590	1.30	14.3	462	47.1	26000	2650	1.30	1 - 4A100 - 123	125	●	●
			25400	2590	1.60				26000	2650	1.60	1 - 4A105 - 123	125	●	●
			25400	2590	2.00				26000	2650	2.00	1 - 4A110 - 123	125	●	●
			25400	2590	2.31				26000	2650	2.31	1 - 4A115 - 123	125	●	●
9.63	685	69.8	24300	2480	1.04	11.6	568	57.9	25300	2580	1.04	1 - 4A100 - 151	125	●	●
			24300	2480	1.44				25300	2580	1.44	1 - 4A105 - 151	125	●	●
			24300	2480	1.88				25300	2580	1.88	1 - 4A115 - 151	125	●	●
			43600	4440	2.55				44000	4490	2.55	1 - 4B120 - 151	127	●	●
8.12	813	82.9	23000	2340	1.03	9.80	674	68.7	24400	2490	1.03	1 - 4A105 - 179	125	●	●
			23000	2340	1.26				24400	2490	1.26	1 - 4A110 - 179	125	●	●
			23000	2340	1.48				24400	2490	1.48	1 - 4A115 - 179	125	●	●
			23000	2340	1.59				24400	2490	1.59	1 - 4A120 - 179	125	●	●
			43200	4400	2.17				43600	4440	2.29	1 - 4B120 - 179	127	●	●
			43200	4400	2.63				43600	4440	3.04	1 - 4B125 - 179	127	●	●
7.02	940	95.8	21300	2170	0.91	8.47	779	79.4	23400	2390	0.94	1 - 4A105 - 207	125	—	—
			21300	2170	1.15				23400	2390	1.15	1 - 4A110 - 207	125	●	●
			21300	2170	1.35				23400	2390	1.35	1 - 4A115 - 207	125	●	●
			42600	4340	1.73				43300	4410	1.73	1 - 4B120 - 207	127	●	●
			42600	4340	2.16				43300	4410	2.16	1 - 4B125 - 207	127	●	●
			42600	4340	2.73				43300	4410	2.73	1 - 4B140 - 207	127	●	●
5.84	1130	115	17900	1820	1.01	7.04	938	95.6	21300	2170	1.01	1 - 4A115 - 249	125	●	●
			17900	1820	1.14				21300	2170	1.14	1 - 4A120 - 249	125	●	●
			41700	4250	1.28				42600	4340	1.28	1 - 4B120 - 249	127	●	●
			41700	4250	1.52				42600	4340	1.60	1 - 4B125 - 249	127	●	●
			41700	4250	2.27				42600	4340	2.27	1 - 4B145 - 249	127	●	●
4.76	1390	142	10300	1050	0.93	5.75	1150	117	17600	1790	0.93	1 - 4A115 - 305	125	—	—
			40100	4090	1.26				41600	4240	1.26	1 - 4B120 - 305	127	●	●
			40100	4090	1.37				41600	4240	1.51	1 - 4B125 - 305	127	●	●
			40100	4090	1.85				41600	4240	1.85	1 - 4B145 - 305	127	●	●
			70100	7150	2.64				70600	7200	2.64	1 - 4C140 - 305	129	●	●
3.98	1570	160	37900	3860	1.36	4.81	1300	133	40100	4090	1.64	1 - 4B12DB - 364	127	●	●
			37900	3860	1.63				40100	4090	1.97	1 - 4B14DB - 364	127	●	●
			69300	7060	2.03				70100	7150	2.03	1 - 4C14DB - 364	129	●	●
			69300	7060	2.96				70100	7150	3.57	1 - 4C14DC - 364	129	●	●
3.42	1830	187	35200	3590	1.16	4.13	1520	155	38400	3910	1.40	1 - 4B12DB - 424	127	●	●
			35200	3590	1.40				38400	3910	1.69	1 - 4B14DB - 424	127	●	●
			68400	6970	2.03				69500	7080	2.03	1 - 4C14DB - 424	129	●	●
			68400	6970	2.40				69500	7080	2.89	1 - 4C14DC - 424	129	●	●
			68400	6970	2.81				69500	7080	3.39	1 - 4C16DB - 424	129	●	●

Selection Table for Gearmotors

0.75 kW	Frequency	Hz	50Hz	60Hz
	Motor poles	P	4	
	Motor speed n_1	r/min	1450	1750

IMPORTANT :
Please refer to page 54 for Gearmotor Selection Table notes.

Reduction ratio 501 ► 2559

50Hz						60Hz						Model (refer to page 23)	Dimensional Drawing Page	Options Available Note 9	
Output Speed n_2	Output Torque T_{out}		Allowable Radial Load of Output Shaft Pro		SF_G	Output Speed n_2	Output Torque T_{out}		Allowable Radial Load of Output Shaft Pro		SF_G	Capacity Symbol - Frame Size - Reduction Ratio		AF Motor Note 8	High-Efficiency Motor
r/min	N·m	kgf·m	N	kgf		r/min	N·m	kgf·m	N	kgf					
2.90	2160	220	30600	3120	0.99	3.50	1790	182	35600	3630	1.20	1 - 4B12DB - 501	127	●	●
			30600	3120	1.19				35600	3630	1.43	1 - 4B14DB - 501	127	●	●
			67000	6830	2.03				68500	6980	2.03	1 - 4C14DB - 501	129	●	●
			67000	6830	2.38				68500	6980	2.87	1 - 4C16DB - 501	129	●	●
2.51	2500	255	24200	2470	0.86	3.03	2070	211	32000	3260	1.04	1 - 4B12DB - 578	127	●	●
			24200	2470	1.03				32000	3260	1.24	1 - 4B14DB - 578	127	●	●
			65300	6660	1.85				67400	6870	2.03	1 - 4C14DB - 578	129	●	●
			65300	6660	2.06				67400	6870	2.49	1 - 4C16DB - 578	129	●	●
			95000	9680	2.87				96100	9800	3.45	1 - 4D16DB - 578	131	●	●
2.12	2950	301	4750	484	0.87	2.56	2440	249	25300	2580	1.05	1 - 4B14DB - 683	127	●	●
			62600	6380	1.56				65600	6690	1.89	1 - 4C14DB - 683	129	●	●
			62600	6380	1.74				65600	6690	2.03	1 - 4C16DA - 683	129	●	●
			93700	9550	2.03				95200	9700	2.03	1 - 4D16DA - 683	131	●	●
			93700	9550	2.43				95200	9700	2.92	1 - 4D16DB - 683	131	●	●
			93700	9550	2.96				95200	9700	3.57	1 - 4D17DB - 683	131	●	●
1.79	3490	356	58400	5950	1.30	2.16	2900	296	62900	6410	1.57	1 - 4C14DB - 809	129	●	●
			91700	9350	2.03				93800	9560	2.03	1 - 4D16DA - 809	131	●	●
			91700	9350	2.50				93800	9560	3.01	1 - 4D17DB - 809	131	●	●
1.52	4130	421	52200	5320	1.10	1.83	3420	349	59000	6010	1.33	1 - 4C14DB - 956	129	●	●
			52200	5320	1.24				59000	6010	1.50	1 - 4C16DA - 956	129	●	●
			88900	9060	1.73				92000	9380	2.03	1 - 4D16DA - 956	131	●	●
			97700	9960	2.03				99100	10100	2.03	1 - 4E17DA - 956	133	●	●
			97700	9960	2.59				99100	10100	3.13	1 - 4E17DB - 956	133	●	●
			97700	9960	2.81				99100	10100	3.39	1 - 4E18DA - 956	133	●	●
1.30	4830	492	42800	4360	0.97	1.57	4000	408	53600	5460	1.17	1 - 4C14DB - 1117	129	●	●
			42800	4360	1.07				53600	5460	1.29	1 - 4C16DA - 1117	129	●	●
			85200	8690	1.48				89500	9120	1.79	1 - 4D16DA - 1117	131	●	●
			85200	8690	1.81				89500	9120	2.03	1 - 4D17DA - 1117	131	●	●
			96300	9820	2.03				97900	9980	2.03	1 - 4E17DA - 1117	133	●	●
			96300	9820	2.22				97900	9980	2.68	1 - 4E17DB - 1117	133	●	●
			96300	9820	2.40				97900	9980	2.90	1 - 4E18DA - 1117	133	●	●
1.10	5700	581	22600	2300	0.82	1.33	4730	482	44400	4530	0.99	1 - 4C14DB - 1320	129	—	—
			79400	8090	1.25				85800	8750	1.51	1 - 4D16DA - 1320	131	●	●
			79400	8090	1.53				85800	8750	1.85	1 - 4D17DA - 1320	131	●	●
			94500	9630	1.88				96500	9840	2.03	1 - 4E17DA - 1320	133	●	●
			94500	9630	2.03				96500	9840	2.45	1 - 4E18DA - 1320	133	●	●
			133000	13600	2.99				135000	13800	3.60	1 - 4F18DA - 1320	135	●	●
0.876	7160	730	66000	6730	1.00	1.06	5930	604	77600	7910	1.21	1 - 4D16DA - 1656	131	●	●
			66000	6730	1.22				77600	7910	1.47	1 - 4D17DA - 1656	131	●	●
			91600	9340	1.50				94100	9590	1.80	1 - 4E17DA - 1656	133	●	●
			91600	9340	1.62				94100	9590	1.96	1 - 4E18DA - 1656	133	●	●
			131000	13400	2.37				133000	13600	2.87	1 - 4F18DA - 1656	135	●	●
			131000	13400	2.43				133000	13600	2.93	1 - 4F19DA - 1656	135	●	●
0.741	8460	862	47400	4830	0.85	0.894	7010	715	67700	6900	1.02	1 - 4D16DA - 1957	131	●	●
			47400	4830	1.03				67700	6900	1.24	1 - 4D17DA - 1957	131	●	●
			89000	9070	1.27				91900	9370	1.53	1 - 4E17DA - 1957	133	●	●
			89000	9070	1.37				91900	9370	1.66	1 - 4E18DA - 1957	133	●	●
			129000	13100	2.01				131000	13400	2.43	1 - 4F18DA - 1957	135	●	●
			129000	13100	2.06				131000	13400	2.48	1 - 4F19DA - 1957	135	●	●
0.638	9820	1000	86300	8800	1.09	0.770	8130	829	89700	9140	1.32	1 - 4E17DA - 2272	133	●	●
			86300	8800	1.18				89700	9140	1.43	1 - 4E18DA - 2272	133	●	●
			126000	12800	1.73				129000	13100	2.09	1 - 4F18DA - 2272	135	●	●
			126000	12800	1.77				129000	13100	2.14	1 - 4F19DA - 2272	135	●	●
0.567	11100	1130	81500	8310	0.97	0.684	9160	934	87600	8930	1.17	1 - 4E17DA - 2559	133	●	●
			81500	8310	1.05				87600	8930	1.27	1 - 4E18DA - 2559	133	●	●
			124000	12600	1.53				127000	12900	1.85	1 - 4F18DA - 2559	135	●	●
			124000	12600	1.57				127000	12900	1.90	1 - 4F19DA - 2559	135	●	●

Selection Table for Gearmotors

0.75 kW

Frequency	Hz	50Hz	60Hz
Motor poles	P	4	
Motor speed n_1	r/min	1450	1750

IMPORTANT :
Please refer to page 54 for Gearmotor Selection Table notes.

Reduction ratio 2944 ►4365

50Hz						60Hz						Model (refer to page 23)	Dimensional Drawing Page	Options Available Note 11	
Output Speed n_2	Output Torque T_{out}		Allowable Radial Load of Output Shaft Pro		SF_G	Output Speed n_2	Output Torque T_{out}		Allowable Radial Load of Output Shaft Pro		SF_G	Capacity Symbol - Frame Size - Reduction Ratio		AF Motor Note 10	High-Efficiency Motor
r/min	N·m	kgf·m	N	kgf		r/min	N·m	kgf·m	N	kgf					
0.493	12700	1290	60500	6170	0.84	0.595	10500	1070	84900	8650	1.02	1 - 4E17DA - 2944	133	●	●
			60500	6170	0.91				84900	8650	1.10	1 - 4E18DA - 2944	133	●	●
			121000	12300	1.33				125000	12700	1.61	1 - 4F18DA - 2944	135	●	●
			121000	12300	1.37				125000	12700	1.65	1 - 4F19DA - 2944	135	●	●
0.413	15200	1550	117000	11900	1.12	0.499	12600	1280	122000	12400	1.35	1 - 4F18DA - 3511	135	●	●
			117000	11900	1.15				122000	12400	1.38	1 - 4F19DA - 3511	135	●	●
0.332	18900	1930	111000	11300	0.90	0.401	15600	1590	116000	11800	1.09	1 - 4F18DA - 4365	135	●	●
			111000	11300	0.92				116000	11800	1.11	1 - 4F19DA - 4365	135	●	●

1.1 kW

Frequency	Hz	50Hz	60Hz
Motor poles	P	4	
Motor speed n_1	r/min	1450	1750

IMPORTANT :
Please refer to page 54 for Gearmotor Selection Table notes.

Reduction ratio 11 ► 80

50Hz						60Hz						Model (refer to page 23)	Dimensional Drawing Page	Options Available Note 11	
Output Speed n_2	Output Torque T_{out}		Allowable Radial Load of Output Shaft Pro		SF_G	Output Speed n_2	Output Torque T_{out}		Allowable Radial Load of Output Shaft Pro		SF_G	Capacity Symbol - Frame Size - Reduction Ratio		AF Motor Note 10	High-Efficiency Motor
r/min	N·m	kgf·m	N	kgf		r/min	N·m	kgf·m	N	kgf					
138	70.1	7.15	17800	1810	2.14	167	58.1	5.92	16900	1720	2.14	1H - 4A100 - 11	125	—	●
			17800	1810	2.89				16900	1720	2.89	1H - 4A105 - 11	125	—	●
113	85.5	8.72	18900	1930	2.14	137	70.8	7.22	17900	1820	2.14	1H - 4A100 - 13	125	—	●
			18900	1930	2.89				17900	1820	2.89	1H - 4A105 - 13	125	—	●
104	93.5	9.53	19400	1980	2.14	125	77.5	7.90	18400	1880	2.14	1H - 4A100 - 14	125	—	●
			19400	1980	2.89				18400	1880	2.89	1H - 4A105 - 14	125	—	●
90.6	107	10.9	20100	2050	2.14	109	88.6	9.03	19100	1950	2.14	1H - 4A100 - 16	125	—	●
			20100	2050	2.89				19100	1950	2.89	1H - 4A105 - 16	125	—	●
82.9	117	11.9	20600	2100	2.14	100	96.9	9.88	19500	1990	2.14	1H - 4A100 - 18	125	—	●
			20600	2100	2.89				19500	1990	2.89	1H - 4A105 - 18	125	—	●
69.0	140	14.3	21700	2210	2.14	83.3	116	11.8	20600	2100	2.14	1H - 4A100 - 21	125	—	●
			21700	2210	2.89				20600	2100	2.89	1H - 4A105 - 21	125	—	●
51.8	187	19.1	23400	2390	2.14	62.5	155	15.8	22300	2270	2.14	1H - 4A100 - 28	125	—	●
			23400	2390	2.89				22300	2270	2.89	1H - 4A105 - 28	125	—	●
41.2	235	24.0	24900	2540	2.14	49.7	195	19.9	23700	2420	2.14	1H - 4A100 - 35	125	—	●
			24900	2540	2.89				23700	2420	2.89	1H - 4A105 - 35	125	—	●
37.7	257	26.2	25500	2600	2.14	45.5	213	21.7	24300	2480	2.14	1H - 4A100 - 39	125	—	●
			25500	2600	2.89				24300	2480	2.89	1H - 4A105 - 39	125	—	●
31.9	304	31.0	26600	2710	2.14	38.5	252	25.7	25400	2590	2.14	1H - 4A100 - 46	125	—	●
			26600	2710	2.89				25400	2590	2.89	1H - 4A105 - 46	125	—	●
27.6	351	35.8	26600	2710	2.14	33.3	291	29.7	26300	2680	2.14	1H - 4A100 - 53	125	—	●
			26600	2710	2.89				26300	2680	2.89	1H - 4A105 - 53	125	—	●
24.4	397	40.5	26400	2690	1.81	29.4	329	33.5	26700	2720	1.81	1H - 4A100 - 60	125	—	●
			26400	2690	2.24				26700	2720	2.24	1H - 4A105 - 60	125	—	●
			26400	2690	2.89				26700	2720	2.89	1H - 4A110 - 60	125	—	●
21.6	449	45.8	26100	2660	1.73	26.0	372	37.9	26500	2700	1.75	1H - 4A100 - 67	125	—	●
			26100	2660	2.07				26500	2700	2.13	1H - 4A105 - 67	125	—	●
			26100	2660	2.47				26500	2700	2.47	1H - 4A110 - 67	125	—	●
			26100	2660	2.83				26500	2700	2.83	1H - 4A115 - 67	125	—	●
			26100	2660	2.87				26500	2700	2.87	1H - 4A120 - 67	125	—	●
19.7	491	50.1	25900	2640	1.73	23.8	407	41.5	26300	2680	1.75	1H - 4A100 - 74	125	—	●
			25900	2640	2.07				26300	2680	2.13	1H - 4A105 - 74	125	—	●
			25900	2640	2.47				26300	2680	2.47	1H - 4A110 - 74	125	—	●
			25900	2640	2.63				26300	2680	2.63	1H - 4A120 - 74	125	—	●
18.1	534	54.4	25600	2610	1.15	21.9	443	45.2	26100	2660	1.15	1H - 4A100 - 80	125	—	●
			25600	2610	1.52				26100	2660	1.52	1H - 4A105 - 80	125	—	●
			25600	2610	1.74				26100	2660	1.74	1H - 4A110 - 80	125	—	●
			25600	2610	2.02				26100	2660	2.02	1H - 4A115 - 80	125	—	●
			25600	2610	2.41				26100	2660	2.41	1H - 4A120 - 80	125	—	●
			42900	4370	2.81				40800	4160	2.81	1H - 4B120 - 80	127	—	●

Selection Table for Gearmotors

1.1 kW	Frequency	Hz	50Hz	60Hz
	Motor poles	P	4	
	Motor speed n_1	r/min	1450	1750

IMPORTANT :
Please refer to page 54 for Gearmotor Selection Table notes.

Reduction ratio 88 ► 364

50Hz						60Hz						Model (refer to page 23)	Dimensional Drawing Page	Options Available Note 11	
Output Speed n_2	Output Torque T_{out}		Allowable Radial Load of Output Shaft Pro		SF_G	Output Speed n_2	Output Torque T_{out}		Allowable Radial Load of Output Shaft Pro		SF_G	Capacity - Frame Size - Reduction Ratio		AF Motor Note 10	High-Efficiency Motor
r/min	N·m	kgf·m	N	kgf		r/min	N·m	kgf·m	N	kgf					
16.6	584	59.5	25200	2570	1.15	20.0	484	49.3	25900	2640	1.15	1H - 4A100 - 88	125	–	●
			25200	2570	1.52				25900	2640	1.52	1H - 4A105 - 88	125	–	●
			25200	2570	1.74				25900	2640	1.74	1H - 4A110 - 88	125	–	●
			25200	2570	2.02				25900	2640	2.02	1H - 4A115 - 88	125	–	●
			25200	2570	2.21				25900	2640	2.21	1H - 4A120 - 88	125	–	●
			43900	4480	2.81				41800	4260	2.81	1H - 4B120 - 88	127	–	●
14.3	678	69.1	24400	2490	1.10	17.2	562	57.3	25400	2590	1.10	1H - 4A100 - 102	125	–	●
			24400	2490	1.45				25400	2590	1.45	1H - 4A105 - 102	125	–	●
			24400	2490	1.73				25400	2590	1.73	1H - 4A110 - 102	125	–	●
			24400	2490	1.90				25400	2590	1.90	1H - 4A115 - 102	125	–	●
			43600	4440	2.61				43500	4430	2.72	1H - 4B120 - 102	127	–	●
12.9	748	76.2	23700	2420	0.89	15.6	620	63.2	24900	2540	0.89	1H - 4A100 - 112	125	–	–
			23700	2420	1.09				24900	2540	1.09	1H - 4A105 - 112	125	–	●
			23700	2420	1.36				24900	2540	1.36	1H - 4A110 - 112	125	–	●
			23700	2420	1.65				24900	2540	1.65	1H - 4A115 - 112	125	–	●
			23700	2420	1.72				24900	2540	1.72	1H - 4A120 - 112	125	–	●
			43400	4420	2.15				43800	4460	2.26	1H - 4B120 - 112	127	–	●
			43400	4420	2.62				43800	4460	2.89	1H - 4B125 - 112	127	–	●
11.8	818	83.4	22900	2330	0.89	14.3	678	69.1	24400	2490	0.89	1H - 4A100 - 123	125	–	–
			22900	2330	1.09				24400	2490	1.09	1H - 4A105 - 123	125	–	●
			22900	2330	1.36				24400	2490	1.36	1H - 4A110 - 123	125	–	●
			22900	2330	1.58				24400	2490	1.58	1H - 4A115 - 123	125	–	●
			43100	4390	2.15				43600	4440	2.26	1H - 4B120 - 123	127	–	●
			43100	4390	2.62				43600	4440	2.89	1H - 4B125 - 123	127	–	●
9.63	1010	103	20300	2070	0.98	11.6	833	84.9	22700	2310	0.98	1H - 4A105 - 151	125	–	–
			20300	2070	1.18				22700	2310	1.18	1H - 4A110 - 151	125	–	●
			20300	2070	1.28				22700	2310	1.28	1H - 4A115 - 151	125	–	●
			42300	4310	1.74				43100	4390	1.74	1H - 4B120 - 151	127	–	●
			42300	4310	2.13				43100	4390	2.16	1H - 4B125 - 151	127	–	●
			42300	4310	2.56				43100	4390	2.56	1H - 4B140 - 151	127	–	●
8.12	1190	121	16600	1690	1.01	9.80	988	101	20600	2100	1.01	1H - 4A115 - 179	125	–	●
			16600	1690	1.08				20600	2100	1.08	1H - 4A120 - 179	125	–	●
			41300	4210	1.48				42400	4320	1.56	1H - 4B120 - 179	127	–	●
			41300	4210	1.79				42400	4320	2.07	1H - 4B125 - 179	127	–	●
			41300	4210	2.16				42400	4320	2.16	1H - 4B140 - 179	127	–	●
7.02	1380	141	10700	1090	0.92	8.47	1140	116	17700	1800	0.92	1H - 4A115 - 207	125	–	–
			10700	1090	0.94				17700	1800	0.94	1H - 4A125 - 207	125	–	–
			40100	4090	1.18				41600	4240	1.18	1H - 4B120 - 207	127	–	●
			40100	4090	1.47				41600	4240	1.47	1H - 4B125 - 207	127	–	●
			40100	4090	1.86				41600	4240	1.86	1H - 4B145 - 207	127	–	●
			70100	7150	2.69				70600	7200	2.69	1H - 4C140 - 207	129	–	●
			70100	7150	2.89				70600	7200	3.32	1H - 4C145 - 207	129	–	●
5.84	1660	169	37900	3860	1.04	7.04	1380	141	40100	4090	1.09	1H - 4B125 - 249	127	–	●
			37900	3860	1.55				40100	4090	1.55	1H - 4B145 - 249	127	–	●
			69300	7060	2.21				70100	7150	2.21	1H - 4C140 - 249	129	–	●
			69300	7060	2.38				70100	7150	2.75	1H - 4C145 - 249	129	–	●
4.76	2030	207	33900	3460	0.94	5.75	1690	172	37600	3830	1.03	1H - 4B125 - 305	127	–	–
			33900	3460	1.26				37600	3830	1.26	1H - 4B145 - 305	127	–	●
			68000	6930	1.80				69200	7050	1.80	1H - 4C140 - 305	129	–	●
			68000	6930	1.96				69200	7050	2.25	1H - 4C145 - 305	129	–	●
			68000	6930	2.53				69200	7050	2.53	1H - 4C160 - 305	129	–	●
3.98	2310	235	28100	2860	0.93	4.81	1910	195	34200	3490	1.12	1H - 4B12DB - 364	127	–	–
			28100	2860	1.11				34200	3490	1.34	1H - 4B14DB - 364	127	–	●
			66300	6760	1.38				68100	6940	1.38	1H - 4C14DB - 364	129	–	●
			66300	6760	2.02				68100	6940	2.44	1H - 4C14DC - 364	129	–	●
			66300	6760	2.23				68100	6940	2.69	1H - 4C16DB - 364	129	–	●

Selection Table for Gearmotors

1.1 kW	Frequency	Hz	50Hz	60Hz
	Motor poles	P	4	
	Motor speed n_1	r/min	1450	1750

IMPORTANT :
Please refer to page 54 for Gearmotor Selection Table notes.

Reduction ratio 424 ► 1957

50Hz						60Hz						Model (refer to page 23)	Dimensional Drawing Page	Options Available Note 11	
Output Speed n_2	Output Torque T_{out}		Allowable Radial Load of Output Shaft Pro		SF_G	Output Speed n_2	Output Torque T_{out}		Allowable Radial Load of Output Shaft Pro		SF_G	Capacity Symbol - Frame Size - Reduction Ratio		AF Motor Note 10	High-Efficiency Motor
r/min	N·m	kgf·m	N	kgf		r/min	N·m	kgf·m	N	kgf					
3.42	2680	273	19000	1940	0.96	4.13	2220	226	29600	3020	1.16	1H - 4B14DB - 424	127	–	–
			64200	6540	1.38				66700	6800	1.38	1H - 4C14DB - 424	129	–	●
			64200	6540	1.64				66700	6800	1.97	1H - 4C14DC - 424	129	–	●
			64200	6540	1.91				66700	6800	2.31	1H - 4C16DB - 424	129	–	●
			94500	9630	2.66				95700	9760	2.89	1H - 4D16DB - 424	131	–	●
			94500	9630	2.89				95700	9760	2.89	1H - 4D17DB - 424	131	–	●
2.90	3170	323	61000	6220	1.38	3.50	2630	268	64600	6590	1.38	1H - 4C14DB - 501	129	–	●
			61000	6220	1.62				64600	6590	1.96	1H - 4C16DB - 501	129	–	●
			92900	9470	2.25				94600	9640	2.72	1H - 4D16DB - 501	131	–	●
			99600	10200	2.89				101000	10300	2.89	1H - 4E17DB - 501	133	–	●
2.51	3660	373	56900	5800	1.26	3.03	3030	309	62000	6320	1.38	1H - 4C14DB - 578	129	–	●
			56900	5800	1.38				62000	6320	1.38	1H - 4C16DA - 578	129	–	●
			91000	9280	1.95				93400	9520	2.35	1H - 4D16DB - 578	131	–	●
			91000	9280	2.38				93400	9520	2.87	1H - 4D17DB - 578	131	–	●
			98600	10100	2.89				99800	10200	2.89	1H - 4E17DB - 578	133	–	●
2.12	4330	441	49800	5080	1.06	2.56	3580	365	57600	5870	1.29	1H - 4C14DB - 683	129	–	●
			49800	5080	1.19				57600	5870	1.38	1H - 4C16DA - 683	129	–	●
			87900	8960	1.38				91300	9310	1.38	1H - 4D16DA - 683	131	–	●
			87900	8960	1.65				91300	9310	1.99	1H - 4D16DB - 683	131	–	●
			87900	8960	2.02				91300	9310	2.43	1H - 4D17DB - 683	131	–	●
			97300	9920	2.47				98700	10100	2.89	1H - 4E17DB - 683	133	–	●
			97300	9920	2.68				98700	10100	3.24	1H - 4E18DB - 683	133	–	●
1.79	5130	523	37500	3820	0.89	2.16	4250	433	50800	5180	1.07	1H - 4C14DB - 809	129	–	–
			37500	3820	1.00				50800	5180	1.21	1H - 4C16DA - 809	129	–	●
			83400	8500	1.38				88300	9000	1.38	1H - 4D16DA - 809	131	–	●
			83400	8500	1.70				88300	9000	2.05	1H - 4D17DB - 809	131	–	●
			95700	9760	2.09				97400	9930	2.52	1H - 4E17DB - 809	133	–	●
			95700	9760	2.26				97400	9930	2.73	1H - 4E18DA - 809	133	–	●
			134000	13700	2.89				136000	13900	2.89	1H - 4F18DA - 809	135	–	●
1.52	6060	618	76600	7810	1.18	1.83	5020	512	84000	8560	1.38	1H - 4D16DA - 956	131	–	●
			76600	7810	1.38				84000	8560	1.38	1H - 4D17DA - 956	131	–	●
			76600	7810	1.44				84000	8560	1.74	1H - 4D17DB - 956	131	–	●
			93800	9560	1.77				95900	9780	2.13	1H - 4E17DB - 956	133	–	●
			93800	9560	1.92				95900	9780	2.31	1H - 4E18DA - 956	133	–	●
			133000	13600	2.81				135000	13800	2.89	1H - 4F18DA - 956	135	–	●
			133000	13600	2.81				135000	13800	3.39	1H - 4F18DB - 956	135	–	●
			133000	13600	2.87				135000	13800	3.47	1H - 4F19DA - 956	135	–	●
1.30	7080	722	66900	6820	1.01	1.57	5860	597	78100	7960	1.22	1H - 4D16DA - 1117	131	–	●
			66900	6820	1.23				78100	7960	1.38	1H - 4D17DA - 1117	131	–	●
			91800	9360	1.38				94200	9600	1.38	1H - 4E17DA - 1117	133	–	●
			91800	9360	1.51				94200	9600	1.82	1H - 4E17DB - 1117	133	–	●
			91800	9360	1.64				94200	9600	1.98	1H - 4E18DA - 1117	133	–	●
			131000	13400	2.40				133000	13600	2.89	1H - 4F18DA - 1117	135	–	●
			131000	13400	2.40				133000	13600	2.90	1H - 4F18DB - 1117	135	–	●
			131000	13400	2.46				133000	13600	2.97	1H - 4F19DA - 1117	135	–	●
1.10	8360	852	49100	5010	0.86	1.33	6930	706	68500	6980	1.03	1H - 4D16DA - 1320	131	–	–
			49100	5010	1.04				68500	6980	1.26	1H - 4D17DA - 1320	131	–	●
			89200	9090	1.28				92100	9390	1.38	1H - 4E17DA - 1320	133	–	●
			89200	9090	1.39				92100	9390	1.67	1H - 4E18DA - 1320	133	–	●
			129000	13100	2.04				131000	13400	2.45	1H - 4F18DA - 1320	135	–	●
			129000	13100	2.08				131000	13400	2.51	1H - 4F19DA - 1320	135	–	●
0.876	10500	1070	85000	8660	1.02	1.06	8700	887	88500	9020	1.23	1H - 4E17DA - 1656	133	–	●
			85000	8660	1.11				88500	9020	1.33	1H - 4E18DA - 1656	133	–	●
			125000	12700	1.62				128000	13000	1.95	1H - 4F18DA - 1656	135	–	●
			125000	12700	1.66				128000	13000	2.00	1H - 4F19DA - 1656	135	–	●
0.741	12400	1260	65300	6660	0.86	0.894	10300	1050	85400	8710	1.04	1H - 4E17DA - 1957	133	–	–
			65300	6660	0.94				85400	8710	1.13	1H - 4E18DA - 1957	133	–	–
			122000	12400	1.37				126000	12800	1.65	1H - 4F18DA - 1957	135	–	●
			122000	12400	1.40				126000	12800	1.69	1H - 4F19DA - 1957	135	–	●

Selection Table for Gearmotors

1.1 kW

Frequency	Hz	50Hz	60Hz
Motor poles	P	4	
Motor speed n_1	r/min	1450	1750

IMPORTANT :
Please refer to page 54 for Gearmotor Selection Table notes.

Reduction ratio 2272 ► 2944

50Hz						60Hz						Model (refer to page 23)	Dimensional Drawing Page	Options Available Note 11	
Output Speed n_2	Output Torque T_{out}		Allowable Radial Load of Output Shaft Pro		SF_G	Output Speed n_2	Output Torque T_{out}		Allowable Radial Load of Output Shaft Pro		SF_G	Capacity - Symbol Frame Size - Reduction Ratio		AF Motor Note 10	High-Efficiency Motor
r/min	N·m	kgf·m	N	kgf		r/min	N·m	kgf·m	N	kgf					
0.638	14400	1470	15900	1620	0.81	0.770	11900	1210	71600	7300	0.97	1H - 4E18DA - 2272	133	—	—
			119000	12100	1.18				123000	12500	1.43	1H - 4F18DA - 2272	135	—	●
			119000	12100	1.21				123000	12500	1.46	1H - 4F19DA - 2272	135	—	●
0.567	16200	1650	115000	11700	1.05	0.684	13400	1370	120000	12200	1.26	1H - 4F18DA - 2559	135	—	●
			115000	11700	1.07				120000	12200	1.29	1H - 4F19DA - 2559	135	—	●
0.493	18700	1910	111000	11300	0.91	0.595	15500	1580	117000	11900	1.10	1H - 4F18DA - 2944	135	—	—
			111000	11300	0.93				117000	11900	1.13	1H - 4F19DA - 2944	135	—	—

1.5 kW

Frequency	Hz	50Hz	60Hz
Motor poles	P	4	
Motor speed n_1	r/min	1450	1750

IMPORTANT :
Please refer to page 54 for Gearmotor Selection Table notes.

Reduction ratio 11 ► 74

50Hz						60Hz						Model (refer to page 23)	Dimensional Drawing Page	Options Available Note 11	
Output Speed n_2	Output Torque T_{out}		Allowable Radial Load of Output Shaft Pro		SF_G	Output Speed n_2	Output Torque T_{out}		Allowable Radial Load of Output Shaft Pro		SF_G	Capacity - Symbol Frame Size - Reduction Ratio		AF Motor Note 10	High-Efficiency Motor
r/min	N·m	kgf·m	N	kgf		r/min	N·m	kgf·m	N	kgf					
138	95.6	9.75	17700	1800	1.57	167	79.2	8.07	16800	1710	1.57	2 - 4A100 - 11	125	●	●
			17700	1800	2.12				16800	1710	2.12	2 - 4A105 - 11	125	●	●
113	117	11.9	18700	1910	1.57	137	96.6	9.85	17700	1800	1.57	2 - 4A100 - 13	125	●	●
			18700	1910	2.12				17700	1800	2.12	2 - 4A105 - 13	125	●	●
104	128	13.0	19200	1960	1.57	125	106	10.8	18200	1860	1.57	2 - 4A100 - 14	125	●	●
			19200	1960	2.12				18200	1860	2.12	2 - 4A105 - 14	125	●	●
90.6	146	14.9	19900	2030	1.57	109	121	12.3	18900	1930	1.57	2 - 4A100 - 16	125	●	●
			19900	2030	2.12				18900	1930	2.12	2 - 4A105 - 16	125	●	●
80.6	159	16.2	20400	2080	1.57	97.2	132	13.5	19400	1980	1.57	2 - 4A100 - 18	125	●	●
			20400	2080	2.12				19400	1980	2.12	2 - 4A105 - 18	125	●	●
69.0	191	19.5	21400	2180	1.57	83.3	158	16.1	20300	2070	1.57	2 - 4A100 - 21	125	●	●
			21400	2180	2.12				20300	2070	2.12	2 - 4A105 - 21	125	●	●
			21400	2180	2.61				20300	2070	2.61	2 - 4A115 - 21	125	●	●
51.8	255	26.0	23100	2350	1.57	62.5	211	21.5	22000	2240	1.57	2 - 4A100 - 28	125	●	●
			23100	2350	2.12				22000	2240	2.12	2 - 4A105 - 28	125	●	●
			23100	2350	2.61				22000	2240	2.61	2 - 4A115 - 28	125	●	●
41.2	321	32.7	24400	2490	1.57	49.7	266	27.1	23300	2380	1.57	2 - 4A100 - 35	125	●	●
			24400	2490	2.12				23300	2380	2.12	2 - 4A105 - 35	125	●	●
			24400	2490	2.61				23300	2380	2.61	2 - 4A115 - 35	125	●	●
37.7	351	35.8	25000	2550	1.57	45.5	291	29.7	23900	2440	1.57	2 - 4A100 - 39	125	●	●
			25000	2550	2.12				23900	2440	2.12	2 - 4A105 - 39	125	●	●
			25000	2550	2.61				23900	2440	2.61	2 - 4A115 - 39	125	●	●
31.9	414	42.2	26000	2650	1.57	38.5	343	35.0	24900	2540	1.57	2 - 4A100 - 46	125	●	●
			26000	2650	2.12				24900	2540	2.12	2 - 4A105 - 46	125	●	●
			26000	2650	2.60				24900	2540	2.60	2 - 4A115 - 46	125	●	●
27.6	478	48.7	25900	2640	1.57	33.3	396	40.4	25800	2630	1.57	2 - 4A100 - 53	125	●	●
			25900	2640	2.12				25800	2630	2.12	2 - 4A105 - 53	125	●	●
			25900	2640	2.60				25800	2630	2.60	2 - 4A115 - 53	125	●	●
			25900	2640	2.70				25800	2630	2.70	2 - 4A120 - 53	125	●	●
24.4	542	55.2	25500	2600	1.33	29.4	449	45.8	26100	2660	1.33	2 - 4A100 - 60	125	●	●
			25500	2600	1.64				26100	2660	1.64	2 - 4A105 - 60	125	●	●
			25500	2600	2.38				26100	2660	2.38	2 - 4A115 - 60	125	●	●
21.6	612	62.4	25000	2550	1.27	26.0	507	51.7	25700	2620	1.29	2 - 4A100 - 67	125	●	●
			25000	2550	1.52				25700	2620	1.56	2 - 4A105 - 67	125	●	●
			25000	2550	2.07				25700	2620	2.07	2 - 4A115 - 67	125	●	●
			25000	2550	2.11				25700	2620	2.11	2 - 4A120 - 67	125	●	●
			40300	4110	2.64				38400	3910	2.64	2 - 4B120 - 67	127	●	●
19.7	669	68.2	24500	2500	1.27	23.8	555	56.6	25400	2590	1.29	2 - 4A100 - 74	125	●	●
			24500	2500	1.52				25400	2590	1.56	2 - 4A105 - 74	125	●	●
			24500	2500	1.93				25400	2590	1.93	2 - 4A115 - 74	125	●	●
			41200	4200	2.64				39300	4010	2.64	2 - 4B120 - 74	127	●	●

Selection Table for Gearmotors

1.5 kW	Frequency	Hz	50Hz	60Hz
	Motor poles	P	4	
	Motor speed n_1	r/min	1450	1750

IMPORTANT :
Please refer to page 54 for Gearmotor Selection Table notes.

Reduction ratio 80 ► 364

50Hz						60Hz						Model (refer to page 23)	Dimensional Drawing Page	Options Available Note 11	
Output Speed n_2	Output Torque T_{out}		Allowable Radial Load of Output Shaft Pro		SF_G	Output Speed n_2	Output Torque T_{out}		Allowable Radial Load of Output Shaft Pro		SF_G	Capacity - Frame Size - Reduction Ratio		AF Motor Note 10	High-Efficiency Motor
r/min	N·m	kgf·m	N	kgf		r/min	N·m	kgf·m	N	kgf					
18.1	729	74.3	23900	2440	1.11	21.9	604	61.6	25000	2550	1.11	2 - 4A105 - 80	125	●	●
			23900	2440	1.48				25000	2550	1.48	2 - 4A115 - 80	125	●	●
			23900	2440	1.77				25000	2550	1.77	2 - 4A120 - 80	125	●	●
			42100	4290	2.06				40100	4090	2.06	2 - 4B120 - 80	127	●	●
			42100	4290	2.64				40100	4090	2.64	2 - 4B125 - 80	127	●	●
16.6	797	81.2	23200	2360	1.11	20.0	660	67.3	24600	2510	1.11	2 - 4A105 - 88	125	●	●
			23200	2360	1.48				24600	2510	1.48	2 - 4A115 - 88	125	●	●
			23200	2360	1.62				24600	2510	1.62	2 - 4A120 - 88	125	●	●
			43000	4380	2.06				41100	4190	2.06	2 - 4B120 - 88	127	●	●
			43000	4380	2.64				41100	4190	2.64	2 - 4B125 - 88	127	●	●
14.3	925	94.3	21500	2190	1.06	17.2	766	78.1	23500	2400	1.06	2 - 4A105 - 102	125	●	●
			21500	2190	1.40				23500	2400	1.40	2 - 4A115 - 102	125	●	●
			42700	4350	1.91				42600	4340	1.99	2 - 4B120 - 102	127	●	●
			42700	4350	2.31				42600	4340	2.51	2 - 4B125 - 102	127	●	●
			42700	4350	2.78				42600	4340	2.78	2 - 4B140 - 102	127	●	●
12.9	1020	104	20000	2040	1.00	15.6	845	86.1	22600	2300	1.00	2 - 4A110 - 112	125	●	●
			20000	2040	1.26				22600	2300	1.26	2 - 4A120 - 112	125	●	●
			42200	4300	1.58				43000	4380	1.66	2 - 4B120 - 112	127	●	●
			42200	4300	1.92				43000	4380	2.12	2 - 4B125 - 112	127	●	●
			42200	4300	2.52				43000	4380	2.52	2 - 4B140 - 112	127	●	●
11.8	1120	114	18300	1870	0.80	14.3	925	94.3	21500	2190	0.80	2 - 4A105 - 123	125	—	—
			18300	1870	1.00				21500	2190	1.00	2 - 4A110 - 123	125	●	●
			18300	1870	1.16				21500	2190	1.16	2 - 4A115 - 123	125	●	●
			41800	4260	1.58				42700	4350	1.66	2 - 4B120 - 123	127	●	●
			41800	4260	1.92				42700	4350	2.12	2 - 4B125 - 123	127	●	●
			41800	4260	2.30				42700	4350	2.30	2 - 4B140 - 123	127	●	●
9.63	1370	140	11000	1120	0.94	11.6	1140	116	17800	1810	0.94	2 - 4A115 - 151	125	—	—
			40200	4100	1.27				41600	4240	1.27	2 - 4B120 - 151	127	●	●
			40200	4100	1.56				41600	4240	1.59	2 - 4B125 - 151	127	●	●
			40200	4100	1.87				41600	4240	1.87	2 - 4B140 - 151	127	●	●
			69900	7130	2.63				66700	6800	2.63	2 - 4C140 - 151	129	●	●
8.12	1630	166	38200	3890	1.09	9.80	1350	138	40300	4110	1.15	2 - 4B120 - 179	127	●	●
			38200	3890	1.31				40300	4110	1.52	2 - 4B125 - 179	127	●	●
			38200	3890	1.58				40300	4110	1.58	2 - 4B140 - 179	127	●	●
			69400	7070	2.29				69600	7090	2.29	2 - 4C140 - 179	129	●	●
			69400	7070	2.47				69600	7090	2.81	2 - 4C145 - 179	129	●	●
7.02	1880	192	35700	3640	1.08	8.47	1560	159	38700	3940	1.08	2 - 4B125 - 207	127	●	●
			35700	3640	1.37				38700	3940	1.37	2 - 4B140 - 207	127	●	●
			68600	6990	1.97				69600	7090	1.97	2 - 4C140 - 207	129	●	●
			68600	6990	2.12				69600	7090	2.43	2 - 4C145 - 207	129	●	●
			68600	6990	2.73				69600	7090	2.73	2 - 4C160 - 207	129	●	●
			96700	9860	2.95				97200	9910	2.95	2 - 4D160 - 207	131	●	●
5.84	2260	230	30800	3140	1.14	7.04	1880	192	35800	3650	1.14	2 - 4B140 - 249	127	●	●
			67100	6840	1.62				68600	6990	1.62	2 - 4C140 - 249	129	●	●
			67100	6840	1.75				68600	6990	2.02	2 - 4C145 - 249	129	●	●
			67100	6840	2.27				68600	6990	2.27	2 - 4C160 - 249	129	●	●
			95900	9780	2.31				96700	9860	2.31	2 - 4D160 - 249	131	●	●
4.76	2770	282	20600	2100	0.93	5.75	2300	234	30300	3090	0.93	2 - 4B140 - 305	127	—	—
			64500	6570	1.44				66900	6820	1.65	2 - 4C145 - 305	129	●	●
			64500	6570	1.85				66900	6820	1.85	2 - 4C160 - 305	129	●	●
			94600	9640	2.15				95800	9770	2.31	2 - 4D160 - 305	131	●	●
			94600	9640	2.51				95800	9770	2.60	2 - 4D165 - 305	131	●	●
3.98	3150	321	61200	6240	1.01	4.81	2610	266	64700	6600	1.01	2 - 4C14DB - 364	129	●	●
			61200	6240	1.48				64700	6600	1.79	2 - 4C14DC - 364	129	●	●
			61200	6240	1.63				64700	6600	1.97	2 - 4C16DB - 364	129	●	●
			93000	9480	2.12				94700	9650	2.12	2 - 4D16DB - 364	131	●	●
			93000	9480	2.27				94700	9650	2.74	2 - 4D16DC - 364	131	●	●
			93000	9480	2.77				94700	9650	3.34	2 - 4D17DC - 364	131	●	●

Selection Table for Gearmotors

1.5 kW

Frequency	Hz	50Hz	60Hz
Motor poles	P	4	
Motor speed n_1	r/min	1450	1750

IMPORTANT :
Please refer to page 54 for Gearmotor Selection Table notes.

Reduction ratio 424 ► 2272

50Hz						60Hz						Model (refer to page 23)	Dimensional Drawing Page	Options Available Note 11	
Efficiency Motor	Output Torque T_{out}		Allowable Radial Load of Output Shaft Pro		SF_G	Output Speed n_2	Output Torque T_{out}		Allowable Radial Load of Output Shaft Pro		SF_G	Capacity Symbol - Frame Size - Reduction Ratio		AF Motor Note 10	High-Efficiency Motor
r/min	N·m	kgf·m	N	kgf		r/min	N·m	kgf·m	N	kgf					
3.42	3660	373	56900	5800	1.01	4.13	3030	309	62000	6320	1.01	2 - 4C14DB - 424	129	●	●
			56900	5800	1.40				62000	6320	1.69	2 - 4C16DB - 424	129	●	●
			91000	9280	1.95				93400	9520	2.12	2 - 4D16DB - 424	131	●	●
			91000	9280	2.12				93400	9520	2.12	2 - 4D17DB - 424	131	●	●
			98600	10100	2.92				99800	10200	3.53	2 - 4E17DC - 424	133	●	●
2.90	4330	441	49800	5080	1.01	3.50	3580	365	57600	5870	1.01	2 - 4C14DB - 501	129	●	●
			49800	5080	1.19				57600	5870	1.43	2 - 4C16DB - 501	129	●	●
			87900	8960	1.65				91300	9310	1.99	2 - 4D16DB - 501	131	●	●
			87900	8960	2.02				91300	9310	2.12	2 - 4D17DB - 501	131	●	●
			97300	9920	2.47				98700	10100	2.98	2 - 4E17DC - 501	133	●	●
			97300	9920	2.68				98700	10100	3.24	2 - 4E18DB - 501	133	●	●
2.51	4990	509	40000	4080	0.93	3.03	4140	422	52100	5310	1.01	2 - 4C14DB - 578	129	●	●
			40000	4080	1.01				52100	5310	1.01	2 - 4C16DA - 578	129	●	●
			84200	8580	1.43				88900	9060	1.73	2 - 4D16DB - 578	131	●	●
			84200	8580	1.75				88900	9060	2.11	2 - 4D17DB - 578	131	●	●
			95900	9780	2.14				97600	9950	2.59	2 - 4E17DC - 578	133	●	●
			95900	9780	2.32				97600	9950	2.80	2 - 4E18DB - 578	133	●	●
2.12	5900	601	13700	1400	0.87	2.56	4890	498	41800	4260	1.01	2 - 4C16DA - 683	129	●	●
			77900	7940	1.01				84800	8640	1.01	2 - 4D16DA - 683	131	●	●
			77900	7940	1.48				84800	8640	1.78	2 - 4D17DB - 683	131	●	●
			94100	9590	1.81				96100	9800	2.12	2 - 4E17DB - 683	133	●	●
			94100	9590	1.97				96100	9800	2.37	2 - 4E18DB - 683	133	●	●
			133000	13600	2.84				135000	13800	3.43	2 - 4F18DB - 683	135	●	●
			133000	13600	2.95				135000	13800	3.56	2 - 4F19DA - 683	135	●	●
1.79	6990	713	67800	6910	1.01	2.16	5790	590	78700	8020	1.01	2 - 4D16DA - 809	131	●	●
			67800	6910	1.25				78700	8020	1.51	2 - 4D17DB - 809	131	●	●
			91900	9370	1.53				94300	9610	1.85	2 - 4E17DB - 809	133	●	●
			91900	9370	1.66				94300	9610	2.00	2 - 4E18DA - 809	133	●	●
			131000	13400	2.12				133000	13600	2.12	2 - 4F18DA - 809	135	●	●
			131000	13400	2.43				133000	13600	2.94	2 - 4F18DB - 809	135	●	●
			131000	13400	2.49				133000	13600	3.00	2 - 4F19DA - 809	135	●	●
1.52	8260	842	50900	5190	0.87	1.83	6840	697	69400	7070	1.01	2 - 4D16DA - 956	131	●	●
			50900	5190	1.01				69400	7070	1.01	2 - 4D17DA - 956	131	●	●
			89400	9110	1.30				92200	9400	1.56	2 - 4E17DB - 956	133	●	●
			89400	9110	1.40				92200	9400	1.69	2 - 4E18DA - 956	133	●	●
			129000	13100	2.06				131000	13400	2.12	2 - 4F18DA - 956	135	●	●
			129000	13100	2.06				131000	13400	2.49	2 - 4F18DB - 956	135	●	●
			129000	13100	2.11				131000	13400	2.54	2 - 4F19DA - 956	135	●	●
1.30	9650	984	1210	123	0.90	1.57	8000	815	55100	5620	1.01	2 - 4D17DA - 1117	131	●	●
			86600	8830	1.01				89900	9160	1.01	2 - 4E17DA - 1117	133	●	●
			86600	8830	1.11				89900	9160	1.34	2 - 4E17DB - 1117	133	●	●
			86600	8830	1.20				89900	9160	1.45	2 - 4E18DA - 1117	133	●	●
			127000	12900	1.76				129000	13100	2.12	2 - 4F18DA - 1117	135	●	●
			127000	12900	1.76				129000	13100	2.13	2 - 4F18DB - 1117	135	●	●
			127000	12900	1.80				129000	13100	2.18	2 - 4F19DA - 1117	135	●	●
1.10	11400	1160	77800	7930	0.94	1.33	9450	963	87000	8870	1.01	2 - 4E17DA - 1320	133	–	–
			77800	7930	1.02				87000	8870	1.23	2 - 4E18DA - 1320	133	●	●
			124000	12600	1.49				127000	12900	1.80	2 - 4F18DA - 1320	135	●	●
			124000	12600	1.53				127000	12900	1.84	2 - 4F19DA - 1320	135	●	●
0.876	14300	1460	21100	2150	0.81	1.06	11900	1210	72500	7390	0.98	2 - 4E18DA - 1656	133	–	–
			119000	12100	1.19				123000	12500	1.43	2 - 4F18DA - 1656	135	●	●
			119000	12100	1.22				123000	12500	1.47	2 - 4F19DA - 1656	135	●	●
0.741	16900	1720	114000	11600	1.01	0.894	14000	1430	119000	12100	1.21	2 - 4F18DA - 1957	135	●	●
			114000	11600	1.03				119000	12100	1.24	2 - 4F19DA - 1957	135	●	●
0.638	19600	2000	109000	11100	0.87	0.770	16300	1660	115000	11700	1.05	2 - 4F18DA - 2272	135	●	●
			109000	11100	0.89				115000	11700	1.07	2 - 4F19DA - 2272	135	●	●

Selection Table for Gearmotors

2.2 kW	Frequency	Hz	50Hz	60Hz
	Motor poles	P	4	
	Motor speed n_1	r/min	1450	1750

IMPORTANT :
Please refer to page 54 for Gearmotor Selection Table notes.

Reduction ratio 11 ► 60

50Hz						60Hz						Model (refer to page 23)	Dimensional Drawing Page	Options Available Note 11	
Output Speed n_2	Output Torque T_{out}		Allowable Radial Load of Output Shaft Pro		SF_G	Output Speed n_2	Output Torque T_{out}		Allowable Radial Load of Output Shaft Pro		SF_G	Capacity - Symbol - Frame Size - Reduction Ratio		AF Motor Note	High-Efficiency Motor
r/min	N·m	kgf·m	N	kgf		r/min	N·m	kgf·m	N	kgf					
138	140	14.3	17500	1780	1.07	167	116	11.8	16600	1690	1.07	3 - 4A100 - 11	125	●	●
			17500	1780	1.45				16600	1690	1.45	3 - 4A105 - 11	125	●	●
			17500	1780	4.36				16600	1690	4.36	3 - 4A120 - 11	125	●	●
113	171	17.4	18400	1880	1.07	137	142	14.5	17500	1780	1.07	3 - 4A100 - 13	125	●	●
			18400	1880	1.45				17500	1780	1.45	3 - 4A105 - 13	125	●	●
			18400	1880	4.36				17500	1780	4.36	3 - 4A120 - 13	125	●	●
104	187	19.1	18900	1930	1.07	125	155	15.8	17900	1820	1.07	3 - 4A100 - 14	125	●	●
			18900	1930	1.45				17900	1820	1.45	3 - 4A105 - 14	125	●	●
			18900	1930	4.36				17900	1820	4.36	3 - 4A120 - 14	125	●	●
90.6	214	21.8	19500	1990	1.07	109	177	18.0	18600	1900	1.07	3 - 4A100 - 16	125	●	●
			19500	1990	1.45				18600	1900	1.45	3 - 4A105 - 16	125	●	●
			19500	1990	4.36				18600	1900	4.36	3 - 4A120 - 16	125	●	●
82.9	234	23.9	20000	2040	1.07	100	194	19.8	19000	1940	1.07	3 - 4A100 - 18	125	●	●
			20000	2040	1.45				19000	1940	1.45	3 - 4A105 - 18	125	●	●
			20000	2040	4.36				19000	1940	4.36	3 - 4A120 - 18	125	●	●
69.0	281	28.6	20900	2130	1.07	83.3	232	23.6	19900	2030	1.07	3 - 4A100 - 21	125	●	●
			20900	2130	1.45				19900	2030	1.45	3 - 4A105 - 21	125	●	●
			20900	2130	1.61				19900	2030	1.61	3 - 4A110 - 21	125	●	●
			20900	2130	1.78				19900	2030	1.78	3 - 4A115 - 21	125	●	●
			20900	2130	2.97				19900	2030	2.97	3 - 4A120 - 21	125	●	●
64.7	299	30.5	21200	2160	2.97	78.1	248	25.3	20300	2070	2.97	3 - 4A120 - 22	125	●	●
59.2	327	33.3	21700	2210	2.97	71.4	271	27.6	20700	2110	2.97	3 - 4A120 - 25	125	●	●
51.8	374	38.1	22400	2280	1.07	62.5	310	31.6	21400	2180	1.07	3 - 4A100 - 28	125	●	●
			22400	2280	1.45				21400	2180	1.45	3 - 4A105 - 28	125	●	●
			22400	2280	1.61				21400	2180	1.61	3 - 4A110 - 28	125	●	●
			22400	2280	1.78				21400	2180	1.78	3 - 4A115 - 28	125	●	●
			22400	2280	2.97				21400	2180	2.97	3 - 4A120 - 28	125	●	●
41.2	470	47.9	23600	2410	1.07	49.7	390	39.8	22600	2300	1.07	3 - 4A100 - 35	125	●	●
			23600	2410	1.45				22600	2300	1.45	3 - 4A105 - 35	125	●	●
			23600	2410	1.61				22600	2300	1.61	3 - 4A110 - 35	125	●	●
			23600	2410	1.78				22600	2300	1.78	3 - 4A115 - 35	125	●	●
			23600	2410	2.30				22600	2300	2.30	3 - 4A120 - 35	125	●	●
			23600	2410	2.69				22600	2300	2.69	3 - 4A125 - 35	125	●	●
			23600	2410	2.74				22600	2300	2.74	3 - 4A140 - 35	125	●	●
37.7	514	52.4	24100	2460	1.07	45.5	426	43.4	23100	2350	1.07	3 - 4A100 - 39	125	●	●
			24100	2460	1.45				23100	2350	1.45	3 - 4A105 - 39	125	●	●
			24100	2460	1.61				23100	2350	1.61	3 - 4A110 - 39	125	●	●
			24100	2460	1.78				23100	2350	1.78	3 - 4A115 - 39	125	●	●
			24100	2460	2.30				23100	2350	2.30	3 - 4A120 - 39	125	●	●
			24100	2460	2.51				23100	2350	2.51	3 - 4A125 - 39	125	●	●
			34100	3480	2.69				32500	3310	2.69	3 - 4B125 - 39	127	●	●
31.9	608	62.0	25000	2550	1.07	38.5	504	51.4	24000	2450	1.07	3 - 4A100 - 46	125	●	●
			25000	2550	1.45				24000	2450	1.45	3 - 4A105 - 46	125	●	●
			25000	2550	1.61				24000	2450	1.61	3 - 4A110 - 46	125	●	●
			25000	2550	1.77				24000	2450	1.77	3 - 4A115 - 46	125	●	●
			25000	2550	2.12				24000	2450	2.12	3 - 4A120 - 46	125	●	●
			35600	3630	2.30				33900	3460	2.30	3 - 4B120 - 46	127	●	●
			35600	3630	2.69				33900	3460	2.69	3 - 4B125 - 46	127	●	●
27.6	701	71.5	24200	2470	1.07	33.3	581	59.2	24800	2530	1.07	3 - 4A100 - 53	125	●	●
			24200	2470	1.45				24800	2530	1.45	3 - 4A105 - 53	125	●	●
			24200	2470	1.61				24800	2530	1.61	3 - 4A110 - 53	125	●	●
			24200	2470	1.77				24800	2530	1.77	3 - 4A115 - 53	125	●	●
			24200	2470	1.84				24800	2530	1.84	3 - 4A120 - 53	125	●	●
			36800	3750	2.30				35200	3590	2.30	3 - 4B120 - 53	127	●	●
			36800	3750	2.69				35200	3590	2.69	3 - 4B125 - 53	127	●	●
24.4	795	81.0	23200	2360	1.12	29.4	659	67.2	24600	2510	1.12	3 - 4A105 - 60	125	●	●
			23200	2360	1.45				24600	2510	1.45	3 - 4A110 - 60	125	●	●
			23200	2360	1.62				24600	2510	1.62	3 - 4A115 - 60	125	●	●
			38000	3870	2.22				36300	3700	2.30	3 - 4B120 - 60	127	●	●
			38000	3870	2.57				36300	3700	2.57	3 - 4B125 - 60	127	●	●

Selection Table for Gearmotors

2.2 kW

Frequency	Hz	50Hz	60Hz
Motor poles	P	4	
Motor speed n_1	r/min	1450	1750

IMPORTANT :
Please refer to page 54 for Gearmotor Selection Table notes.

Reduction ratio 67 ► 249

50Hz						60Hz						Model (refer to page 23)	Dimensional Drawing Page	Options Available Note 11	
Output Speed n_2	Output Torque T_{out}		Allowable Radial Load of Output Shaft Pro		SF_G	Output Speed n_2	Output Torque T_{out}		Allowable Radial Load of Output Shaft Pro		SF_G	Capacity - Frame Size - Reduction Ratio		AF Motor Note 10	High-Efficiency Motor
r/min	N·m	kgf·m	N	kgf		r/min	N·m	kgf·m	N	kgf		Symbol			
21.6	898	91.5	21900	2230	1.04	26.0	744	75.8	23800	2430	1.06	3 - 4A105 - 67	125	●	●
			21900	2230	1.24				23800	2430	1.24	3 - 4A110 - 67	125	●	●
			21900	2230	1.44				23800	2430	1.44	3 - 4A120 - 67	125	●	●
			39000	3980	1.80				37300	3800	1.80	3 - 4B120 - 67	127	●	●
			39000	3980	2.18				37300	3800	2.22	3 - 4B125 - 67	127	●	●
			39000	3980	2.86				37300	3800	2.86	3 - 4B140 - 67	127	●	●
19.7	982	100	20700	2110	1.04	23.8	814	83.0	23000	2340	1.06	3 - 4A105 - 74	125	●	●
			20700	2110	1.31				23000	2340	1.31	3 - 4A115 - 74	125	●	●
			39900	4070	2.18				38200	3890	2.22	3 - 4B125 - 74	127	●	●
			39900	4070	2.62				38200	3890	2.62	3 - 4B140 - 74	127	●	●
18.1	1070	109	19200	1960	0.87	21.9	886	90.3	22100	2250	0.87	3 - 4A110 - 80	125	—	—
			19200	1960	1.01				22100	2250	1.01	3 - 4A115 - 80	125	●	●
			19200	1960	1.21				22100	2250	1.21	3 - 4A120 - 80	125	●	●
			40600	4140	1.40				38900	3970	1.40	3 - 4B120 - 80	127	●	●
			40600	4140	1.80				38900	3970	1.80	3 - 4B125 - 80	127	●	●
			40600	4140	2.40				38900	3970	2.40	3 - 4B140 - 80	127	●	●
16.6	1170	119	17100	1740	0.87	20.0	969	98.8	20900	2130	0.87	3 - 4A110 - 88	125	—	—
			17100	1740	1.01				20900	2130	1.01	3 - 4A115 - 88	125	●	●
			17100	1740	1.10				20900	2130	1.10	3 - 4A120 - 88	125	●	●
			41400	4220	1.40				39800	4060	1.40	3 - 4B120 - 88	127	●	●
			41400	4220	1.80				39800	4060	1.80	3 - 4B125 - 88	127	●	●
			41400	4220	2.20				39800	4060	2.20	3 - 4B140 - 88	127	●	●
14.3	1360	139	11600	1180	0.95	17.2	1120	114	18100	1850	0.95	3 - 4A115 - 102	125	—	—
			40300	4110	1.30				41100	4190	1.36	3 - 4B120 - 102	127	●	●
			40300	4110	1.58				41100	4190	1.71	3 - 4B125 - 102	127	●	●
			40300	4110	1.90				41100	4190	1.90	3 - 4B140 - 102	127	●	●
			61600	6280	2.70				58800	5990	2.70	3 - 4C140 - 102	129	●	●
12.9	1500	153	39200	4000	1.08	15.6	1240	126	41000	4180	1.13	3 - 4B120 - 112	127	●	●
			39200	4000	1.31				41000	4180	1.45	3 - 4B125 - 112	127	●	●
			39200	4000	1.72				41000	4180	1.72	3 - 4B140 - 112	127	●	●
			63100	6430	2.85				60300	6150	3.42	3 - 4C145 - 112	129	●	●
11.8	1640	167	38100	3880	1.08	14.3	1360	139	40300	4110	1.13	3 - 4B120 - 123	127	●	●
			38100	3880	1.31				40300	4110	1.45	3 - 4B125 - 123	127	●	●
			38100	3880	1.57				40300	4110	1.57	3 - 4B140 - 123	127	●	●
			64500	6570	2.37				61600	6280	2.37	3 - 4C140 - 123	129	●	●
			64500	6570	2.85				61600	6280	3.14	3 - 4C145 - 123	129	●	●
9.63	2010	205	34200	3490	1.06	11.6	1670	170	37800	3850	1.08	3 - 4B125 - 151	127	●	●
			34200	3490	1.28				37800	3850	1.28	3 - 4B140 - 151	127	●	●
			67600	6890	1.79				64700	6600	1.79	3 - 4C140 - 151	129	●	●
			67600	6890	2.12				64700	6600	2.45	3 - 4C145 - 151	129	●	●
			67600	6890	2.56				64700	6600	2.56	3 - 4C160 - 151	129	●	●
			96400	9830	2.93				97000	9890	3.39	3 - 4D160 - 151	131	●	●
8.12	2380	243	28900	2950	0.90	9.80	1980	202	34600	3530	1.04	3 - 4B125 - 179	127	●	●
			28900	2950	1.08				34600	3530	1.08	3 - 4B140 - 179	127	●	●
			66500	6780	1.56				67300	6860	1.56	3 - 4C140 - 179	129	●	●
			66500	6780	1.68				67300	6860	1.92	3 - 4C145 - 179	129	●	●
			66500	6780	2.16				67300	6860	2.16	3 - 4C160 - 179	129	●	●
			95600	9750	2.99				96500	9840	3.42	3 - 4D165 - 179	131	●	●
7.02	2760	281	21000	2140	0.93	8.47	2290	233	30500	3110	0.93	3 - 4B140 - 207	127	—	—
			64600	6590	1.35				67000	6830	1.35	3 - 4C140 - 207	129	●	●
			64600	6590	1.45				67000	6830	1.66	3 - 4C145 - 207	129	●	●
			64600	6590	1.86				67000	6830	1.86	3 - 4C160 - 207	129	●	●
			94700	9650	2.01				95900	9780	2.01	3 - 4D160 - 207	131	●	●
			94700	9650	2.59				95900	9780	2.61	3 - 4D165 - 207	131	●	●
5.84	3320	338	61100	6230	1.10	7.04	2750	280	64700	6600	1.10	3 - 4C140 - 249	129	●	●
			61100	6230	1.19				64700	6600	1.38	3 - 4C145 - 249	129	●	●
			61100	6230	1.55				64700	6600	1.55	3 - 4C160 - 249	129	●	●
			93000	9480	2.15				94700	9650	2.57	3 - 4D165 - 249	131	●	●

Selection Table for Gearmotors

2.2 kW	Frequency	Hz	50Hz	60Hz
	Motor poles	P	4	
	Motor speed n_1	r/min	1450	1750

IMPORTANT :
Please refer to page 54 for Gearmotor Selection Table notes.

Reduction ratio 305 ► 1656

50Hz						60Hz						Model (refer to page 23)	Dimensional Drawing Page	Options Available Note 9	
Output Speed n_2	Output Torque T_{out}		Allowable Radial Load of Output Shaft Pro		SF_G	Output Speed n_2	Output Torque T_{out}		Allowable Radial Load of Output Shaft Pro		SF_G	Capacity Symbol - Frame Size - Reduction Ratio		AF Motor Note 8	High-Efficiency Motor
r/min	N·m	kgf·m	N	kgf		r/min	N·m	kgf·m	N	kgf					
4.76	4070	415	55000	5610	0.90	5.75	3370	344	60800	6200	0.90	3 - 4C140 - 305	129	—	—
			55000	5610	0.98				60800	6200	1.13	3 - 4C145 - 305	129	●	●
			55000	5610	1.26				60800	6200	1.26	3 - 4C160 - 305	129	●	●
			90200	9190	1.46				92800	9460	1.58	3 - 4D160 - 305	131	●	●
			90200	9190	1.71				92800	9460	1.77	3 - 4D165 - 305	131	●	●
3.98	4610	470	46000	4690	1.01	4.81	3820	389	55400	5650	1.22	3 - 4C14DC - 364	129	●	●
			46000	4690	1.11				55400	5650	1.34	3 - 4C16DB - 364	129	●	●
			86400	8810	1.89				90300	9200	2.28	3 - 4D17DC - 364	131	●	●
			96700	9860	2.32				98300	10000	2.80	3 - 4E17DC - 364	133	●	●
			96700	9860	2.51				98300	10000	3.03	3 - 4E18DB - 364	133	●	●
3.42	5370	547	32200	3280	0.82	4.13	4450	454	48300	4920	0.99	3 - 4C14DC - 424	129	—	—
			32200	3280	0.96				48300	4920	1.16	3 - 4C16DB - 424	129	●	●
			81700	8330	1.33				87300	8900	1.45	3 - 4D16DB - 424	131	●	●
			81700	8330	1.62				87300	8900	1.96	3 - 4D17DC - 424	131	●	●
			95200	9700	1.99				97000	9890	2.41	3 - 4E17DC - 424	133	●	●
			95200	9700	2.16				97000	9890	2.61	3 - 4E18DB - 424	133	●	●
2.90	6350	647	74100	7550	1.13	3.50	5260	536	82500	8410	1.36	3 - 4D16DB - 501	131	●	●
			74100	7550	1.37				82500	8410	1.45	3 - 4D17DB - 501	131	●	●
			93200	9500	1.45				95400	9720	1.45	3 - 4E17DB - 501	133	●	●
			93200	9500	1.69				95400	9720	2.04	3 - 4E17DC - 501	133	●	●
			93200	9500	1.83				95400	9720	2.21	3 - 4E18DB - 501	133	●	●
			132000	13500	2.63				134000	13700	3.17	3 - 4F18DB - 501	135	●	●
			132000	13500	2.74				134000	13700	3.31	3 - 4F19DB - 501	135	●	●
2.51	7320	746	64100	6530	0.98	3.03	6070	619	76500	7800	1.18	3 - 4D16DB - 578	131	●	●
			64100	6530	1.19				76500	7800	1.44	3 - 4D17DB - 578	131	●	●
			91300	9310	1.45				93800	9560	1.45	3 - 4E17DB - 578	133	●	●
			91300	9310	1.58				93800	9560	1.91	3 - 4E18DB - 578	133	●	●
			131000	13400	2.29				133000	13600	2.76	3 - 4F18DB - 578	135	●	●
			131000	13400	2.38				133000	13600	2.87	3 - 4F19DB - 578	135	●	●
2.12	8650	882	43600	4440	0.83	2.56	7170	731	65900	6720	1.00	3 - 4D16DB - 683	131	●	●
			43600	4440	1.01				65900	6720	1.22	3 - 4D17DB - 683	131	●	●
			88600	9030	1.24				91600	9340	1.45	3 - 4E17DB - 683	133	●	●
			88600	9030	1.34				91600	9340	1.62	3 - 4E18DB - 683	133	●	●
			128000	13000	1.94				131000	13400	2.34	3 - 4F18DB - 683	135	●	●
			128000	13000	2.01				131000	13400	2.43	3 - 4F19DB - 683	135	●	●
1.79	10300	1050	85400	8710	1.04	2.16	8490	865	88900	9060	1.26	3 - 4E17DB - 809	133	●	●
			85400	8710	1.13				88900	9060	1.37	3 - 4E18DA - 809	133	●	●
			126000	12800	1.45				129000	13100	1.45	3 - 4F18DA - 809	135	●	●
			126000	12800	1.66				129000	13100	2.00	3 - 4F18DB - 809	135	●	●
			126000	12800	1.70				129000	13100	2.05	3 - 4F19DA - 809	135	●	●
1.52	12100	1230	69300	7060	0.88	1.83	10000	1020	85900	8760	1.07	3 - 4E17DB - 956	133	●	●
			69300	7060	0.96				85900	8760	1.16	3 - 4E18DA - 956	133	●	●
			122000	12400	1.40				126000	12800	1.45	3 - 4F18DA - 956	135	●	●
			122000	12400	1.40				126000	12800	1.70	3 - 4F18DB - 956	135	●	●
			122000	12400	1.44				126000	12800	1.73	3 - 4F19DA - 956	135	●	●
1.30	14200	1450	27800	2830	0.82	1.57	11700	1190	74100	7550	0.99	3 - 4E18DA - 1117	133	—	—
			119000	12100	1.20				123000	12500	1.45	3 - 4F18DA - 1117	135	●	●
			119000	12100	1.20				123000	12500	1.45	3 - 4F18DB - 1117	135	●	●
			119000	12100	1.23				123000	12500	1.48	3 - 4F19DA - 1117	135	●	●
1.10	16700	1700	115000	11700	1.02	1.33	13900	1420	120000	12200	1.23	3 - 4F18DA - 1320	135	●	●
			115000	11700	1.04				120000	12200	1.26	3 - 4F19DA - 1320	135	●	●
0.876	21000	2140	90200	9190	0.81	1.06	17400	1770	113000	11500	0.98	3 - 4F18DA - 1656	135	—	—
			90200	9190	0.83				113000	11500	1.00	3 - 4F19DA - 1656	135	●	●

Selection Table for Gearmotors

3.0 kW	Frequency	Hz	50Hz	60Hz
	Motor poles	P	4	
	Motor speed n_1	r/min	1450	1750

IMPORTANT :
Please refer to page 54 for Gearmotor Selection Table notes.

Reduction ratio 11 ► 74

50Hz						60Hz						Model (refer to page 23)	Dimensional Drawing Page	Options Available Note 11	
Output Speed n_2	Output Torque T_{out}		Allowable Radial Load of Output Shaft Pro		SF_G	Output Speed n_2	Output Torque T_{out}		Allowable Radial Load of Output Shaft Pro		SF_G	Capacity Symbol - Frame Size - Reduction Ratio		AF Motor Note 10	High-Efficiency Motor
r/min	N·m	kgf·m	N	kgf		r/min	N·m	kgf·m	N	kgf					
138	191	19.5	17200	1750	1.06	167	158	16.1	16400	1670	1.06	4 - 4A105 - 11	125	–	–
			17200	1750	3.20				16400	1670	3.20	4 - 4A120 - 11	125	–	●
113	233	23.8	18100	1850	1.06	137	193	19.7	17200	1750	1.06	4 - 4A105 - 13	125	–	–
			18100	1850	3.20				17200	1750	3.20	4 - 4A120 - 13	125	–	●
104	255	26.0	18500	1890	1.06	125	211	21.5	17600	1790	1.06	4 - 4A105 - 14	125	–	–
			18500	1890	3.20				17600	1790	3.20	4 - 4A120 - 14	125	–	●
90.6	291	29.7	19100	1950	1.06	109	242	24.7	18200	1860	1.06	4 - 4A105 - 16	125	–	–
			19100	1950	3.20				18200	1860	3.20	4 - 4A120 - 16	125	–	●
82.9	319	32.5	19500	1990	1.06	100	264	26.9	18600	1900	1.06	4 - 4A105 - 18	125	–	–
			19500	1990	3.20				18600	1900	3.20	4 - 4A120 - 18	125	–	●
69.0	383	39.0	20400	2080	1.18	83.3	317	32.3	19500	1990	1.18	4 - 4A110 - 21	125	–	–
			20400	2080	1.31				19500	1990	1.31	4 - 4A115 - 21	125	–	●
			20400	2080	2.18				19500	1990	2.18	4 - 4A120 - 21	125	–	●
			20400	2080	2.50				19500	1990	2.50	4 - 4A125 - 21	125	–	●
64.7	408	41.6	20600	2100	2.18	78.1	338	34.5	19800	2020	2.18	4 - 4A120 - 22	125	–	●
			20600	2100	2.50				19800	2020	2.50	4 - 4A125 - 22	125	–	●
59.2	446	45.5	21100	2150	2.18	71.4	370	37.7	20200	2060	2.18	4 - 4A120 - 25	125	–	●
			21100	2150	2.50				20200	2060	2.50	4 - 4A125 - 25	125	–	●
			21100	2150	2.89				20200	2060	2.89	4 - 4A140 - 25	125	–	●
51.8	510	52.0	21700	2210	1.18	62.5	423	43.1	20800	2120	1.18	4 - 4A110 - 28	125	–	–
			21700	2210	1.31				20800	2120	1.31	4 - 4A115 - 28	125	–	–
			21700	2210	2.18				20800	2120	2.18	4 - 4A120 - 28	125	–	●
			21700	2210	2.50				20800	2120	2.50	4 - 4A125 - 28	125	–	●
			21700	2210	2.53				20800	2120	2.53	4 - 4A140 - 28	125	–	●
41.2	641	65.3	22700	2310	1.18	49.7	531	54.1	21900	2230	1.18	4 - 4A110 - 35	125	–	–
			22700	2310	1.31				21900	2230	1.31	4 - 4A115 - 35	125	–	–
			22700	2310	1.69				21900	2230	1.69	4 - 4A120 - 35	125	–	●
			22700	2310	1.97				21900	2230	1.97	4 - 4A125 - 35	125	–	●
			22700	2310	2.01				21900	2230	2.01	4 - 4A140 - 35	125	–	●
37.7	701	71.5	23100	2350	1.18	45.5	581	59.2	22300	2270	1.18	4 - 4A110 - 39	125	–	–
			23100	2350	1.31				22300	2270	1.31	4 - 4A115 - 39	125	–	–
			23100	2350	1.69				22300	2270	1.69	4 - 4A120 - 39	125	–	●
			23100	2350	1.84				22300	2270	1.84	4 - 4A125 - 39	125	–	●
			33300	3390	3.66				31800	3240	3.66	4 - 4B140 - 39	127	–	●
31.9	829	84.5	22800	2320	1.18	38.5	687	70.0	23000	2340	1.18	4 - 4A110 - 46	125	–	–
			22800	2320	1.30				23000	2340	1.30	4 - 4A115 - 46	125	–	–
			22800	2320	1.56				23000	2340	1.56	4 - 4A120 - 46	125	–	●
			34600	3530	1.69				33100	3370	1.69	4 - 4B120 - 46	127	–	●
			34600	3530	1.97				33100	3370	1.97	4 - 4B125 - 46	127	–	●
			34600	3530	3.10				33100	3370	3.10	4 - 4B140 - 46	127	–	●
27.6	956	97.5	21100	2150	1.18	33.3	792	80.7	23200	2360	1.18	4 - 4A110 - 53	125	–	–
			21100	2150	1.30				23200	2360	1.30	4 - 4A115 - 53	125	–	–
			35800	3650	1.69				34300	3500	1.69	4 - 4B120 - 53	127	–	●
			35800	3650	1.97				34300	3500	1.97	4 - 4B125 - 53	127	–	●
			35800	3650	2.69				34300	3500	2.69	4 - 4B140 - 53	127	–	●
24.4	1080	110	18900	1930	1.06	29.4	898	91.5	21900	2230	1.06	4 - 4A110 - 60	125	–	–
			18900	1930	1.19				21900	2230	1.19	4 - 4A115 - 60	125	–	–
			36700	3740	1.63				35300	3600	1.69	4 - 4B120 - 60	127	–	●
			36700	3740	1.89				35300	3600	1.89	4 - 4B125 - 60	127	–	●
			36700	3740	2.37				35300	3600	2.37	4 - 4B140 - 60	127	–	●
21.6	1220	124	15800	1610	1.04	26.0	1010	103	20100	2050	1.04	4 - 4A115 - 67	125	–	–
			37600	3830	1.32				36200	3690	1.32	4 - 4B120 - 67	127	–	●
			37600	3830	1.60				36200	3690	1.63	4 - 4B125 - 67	127	–	●
			37600	3830	2.10				36200	3690	2.10	4 - 4B140 - 67	127	–	●
			54300	5540	2.89				51900	5290	2.89	4 - 4C140 - 67	129	–	●
19.7	1340	137	12300	1250	0.96	23.8	1110	113	18400	1880	0.96	4 - 4A115 - 74	125	–	–
			38400	3910	1.32				36900	3760	1.32	4 - 4B120 - 74	127	–	●
			38400	3910	1.60				36900	3760	1.63	4 - 4B125 - 74	127	–	●
			38400	3910	1.92				36900	3760	1.92	4 - 4B140 - 74	127	–	●
			55500	5660	2.89				53100	5410	2.89	4 - 4C140 - 74	129	–	●

Selection Table for Gearmotors

3.0 kW	Frequency	Hz	50Hz	60Hz
	Motor poles	P	4	
	Motor speed n_1	r/min	1450	1750

IMPORTANT :
Please refer to page 54 for Gearmotor Selection Table notes.

Reduction ratio 80 ► 249

50Hz						60Hz						Model (refer to page 23)	Dimensional Drawing Page	Options Available Note 11	
Output Speed n_2	Output Torque T_{out}		Allowable Radial Load of Output Shaft Pro		SF_G	Output Speed n_2	Output Torque T_{out}		Allowable Radial Load of Output Shaft Pro		SF_G	Capacity Symbol - Frame Size - Reduction Ratio		AF Motor Note 10	High-Efficiency Motor
r/min	N·m	kgf·m	N	kgf		r/min	N·m	kgf·m	N	kgf					
18.1	1460	149	38900	3970	1.03	21.9	1210	123	37500	3820	1.03	4 - 4B120 - 80	127	–	●
			38900	3970	1.32				37500	3820	1.32	4 - 4B125 - 80	127	–	●
			38900	3970	1.76				37500	3820	1.76	4 - 4B140 - 80	127	–	●
			56600	5770	2.30				54200	5520	2.30	4 - 4C140 - 80	129	–	●
			56600	5770	2.64				54200	5520	2.64	4 - 4C145 - 80	129	–	●
16.6	1590	162	38400	3910	1.03	20.0	1320	135	38300	3900	1.03	4 - 4B120 - 88	127	–	●
			38400	3910	1.32				38300	3900	1.32	4 - 4B125 - 88	127	–	●
			38400	3910	1.61				38300	3900	1.61	4 - 4B140 - 88	127	–	●
			57800	5890	2.30				55400	5650	2.30	4 - 4C140 - 88	129	–	●
			57800	5890	2.64				55400	5650	2.64	4 - 4C145 - 88	129	–	●
14.3	1850	189	36000	3670	0.96	17.2	1530	156	39000	3980	1.00	4 - 4B120 - 102	127	–	–
			36000	3670	1.16				39000	3980	1.26	4 - 4B125 - 102	127	–	●
			36000	3670	1.39				39000	3980	1.39	4 - 4B140 - 102	127	–	●
			59800	6100	1.98				57300	5840	1.98	4 - 4C140 - 102	129	–	●
			59800	6100	2.51				57300	5840	2.51	4 - 4C145 - 102	129	–	●
			59800	6100	2.78				57300	5840	2.78	4 - 4C160 - 102	129	–	●
12.9	2040	208	33900	3460	0.96	15.6	1690	172	37600	3830	1.06	4 - 4B125 - 112	127	–	–
			33900	3460	1.26				37600	3830	1.26	4 - 4B140 - 112	127	–	●
			61000	6220	1.74				58600	5970	1.74	4 - 4C140 - 112	129	–	●
			61000	6220	2.09				58600	5970	2.51	4 - 4C145 - 112	129	–	●
			61000	6220	2.52				58600	5970	2.52	4 - 4C160 - 112	129	–	●
			92600	9440	2.67				88300	9000	3.22	4 - 4D160 - 112	131	–	●
11.8	2230	227	31300	3190	0.96	14.3	1850	189	36000	3670	1.06	4 - 4B125 - 123	127	–	–
			31300	3190	1.15				36000	3670	1.15	4 - 4B140 - 123	127	–	●
			62200	6340	1.74				59800	6100	1.74	4 - 4C140 - 123	129	–	●
			62200	6340	2.09				59800	6100	2.30	4 - 4C145 - 123	129	–	●
			62200	6340	2.30				59800	6100	2.30	4 - 4C160 - 123	129	–	●
			94800	9660	2.67				90400	9220	3.22	4 - 4D160 - 123	131	–	●
9.63	2740	279	21500	2190	0.94	11.6	2270	231	30700	3130	0.94	4 - 4B140 - 151	127	–	–
			64700	6600	1.31				62500	6370	1.31	4 - 4C140 - 151	129	–	●
			64700	6600	1.56				62500	6370	1.80	4 - 4C145 - 151	129	–	●
			64700	6600	1.87				62500	6370	1.87	4 - 4C160 - 151	129	–	●
			94700	9650	2.15				95200	9700	2.48	4 - 4D160 - 151	131	–	●
			94700	9650	2.60				95200	9700	2.64	4 - 4D165 - 151	131	–	●
8.12	3250	331	61600	6280	1.14	9.80	2690	274	64600	6590	1.14	4 - 4C140 - 179	129	–	●
			61600	6280	1.23				64600	6590	1.41	4 - 4C145 - 179	129	–	●
			61600	6280	1.58				64600	6590	1.58	4 - 4C160 - 179	129	–	●
			93200	9500	1.83				94900	9670	1.92	4 - 4D160 - 179	131	–	●
			93200	9500	2.19				94900	9670	2.51	4 - 4D165 - 179	131	–	●
			93200	9500	2.55				94900	9670	2.68	4 - 4D170 - 179	131	–	●
			93200	9500	2.68				94900	9670	2.68	4 - 4D175 - 179	131	–	●
			93200	9500	2.68				94900	9670	3.24	4 - 4D180 - 179	131	–	●
7.02	3760	383	57800	5890	1.06	8.47	3120	318	62500	6370	1.22	4 - 4C145 - 207	129	–	●
			57800	5890	1.37				62500	6370	1.37	4 - 4C160 - 207	129	–	●
			91400	9320	1.47				93600	9540	1.47	4 - 4D160 - 207	131	–	●
			91400	9320	1.90				93600	9540	1.92	4 - 4D165 - 207	131	–	●
			91400	9320	2.21				93600	9540	2.32	4 - 4D170 - 207	131	–	●
			91400	9320	2.32				93600	9540	2.32	4 - 4D175 - 207	131	–	●
			91400	9320	2.32				93600	9540	2.80	4 - 4D180 - 207	131	–	●
			98400	10000	2.76				99700	10200	2.76	4 - 4E175 - 207	133	–	●
5.84	4530	462	50200	5120	0.87	7.04	3750	382	57800	5890	1.01	4 - 4C145 - 249	129	–	–
			50200	5120	1.14				57800	5890	1.14	4 - 4C160 - 249	129	–	●
			88100	8980	1.58				91400	9320	1.88	4 - 4D165 - 249	131	–	●
			88100	8980	1.93				91400	9320	1.93	4 - 4D175 - 249	131	–	●
			88100	8980	1.93				91400	9320	2.32	4 - 4D180 - 249	131	–	●
			96900	9880	2.33				98400	10000	2.38	4 - 4E175 - 249	133	–	●
			96900	9880	2.56				98400	10000	2.93	4 - 4E180 - 249	133	–	●
			96900	9880	2.56				98400	10000	3.09	4 - 4E185 - 249	133	–	●
			135000	13800	2.93				137000	14000	2.93	4 - 4F180 - 249	135	–	●

Selection Table for Gearmotors

3.0 kW	Frequency	Hz	50Hz	60Hz
	Motor poles	P	4	
	Motor speed n_1	r/min	1450	1750

IMPORTANT :
Please refer to page 54 for Gearmotor Selection Table notes.

Reduction ratio 305 ► 1117

50Hz						60Hz						Model (refer to page 23)	Dimensional Drawing Page	Options Available Note 11	
Output Speed n_2	Output Torque T_{out}		Allowable Radial Load of Output Shaft Pro		SF_G	Output Speed n_2	Output Torque T_{out}		Allowable Radial Load of Output Shaft Pro		SF_G	Capacity Symbol - Frame Size - Reduction Ratio		AF Motor Note 10	High-Efficiency Motor
r/min	N·m	kgf·m	N	kgf		r/min	N·m	kgf·m	N	kgf					
4.76	5550	566	34600	3530	0.93	5.75	4600	469	49400	5040	0.93	4 - 4C160 - 305	129	–	–
			82400	8400	1.07				87800	8950	1.16	4 - 4D160 - 305	131	–	●
			82400	8400	1.26				87800	8950	1.30	4 - 4D165 - 305	131	–	●
			82400	8400	1.52				87800	8950	1.57	4 - 4D170 - 305	131	–	●
			82400	8400	1.57				87800	8950	1.57	4 - 4D175 - 305	131	–	●
			82400	8400	1.57				87800	8950	1.90	4 - 4D180 - 305	131	–	●
			94800	9660	1.87				96700	9860	1.87	4 - 4E175 - 305	133	–	●
			94800	9660	2.09				96700	9860	2.38	4 - 4E180 - 305	133	–	●
			94800	9660	2.09				96700	9860	2.52	4 - 4E185 - 305	133	–	●
			134000	13700	2.86				135000	13800	2.86	4 - 4F185 - 305	135	–	●
3.98	6290	641	74600	7600	1.14	4.81	5210	531	82800	8440	1.37	4 - 4D16DC - 364	131	–	●
			74600	7600	1.39				82800	8440	1.67	4 - 4D17DC - 364	131	–	●
			93300	9510	1.70				95500	9730	2.05	4 - 4E17DC - 364	133	–	●
			93300	9510	1.84				95500	9730	2.22	4 - 4E18DB - 364	133	–	●
			132000	13500	2.65				134000	13700	3.20	4 - 4F18DB - 364	135	–	●
			132000	13500	2.76				134000	13700	3.34	4 - 4F19DB - 364	135	–	●
3.42	7320	746	64100	6530	0.98	4.13	6070	619	76500	7800	1.18	4 - 4D16DC - 424	131	–	–
			64100	6530	1.19				76500	7800	1.44	4 - 4D17DC - 424	131	–	●
			91300	9310	1.46				93800	9560	1.76	4 - 4E17DC - 424	133	–	●
			91300	9310	1.58				93800	9560	1.91	4 - 4E18DB - 424	133	–	●
			131000	13400	2.23				133000	13600	2.70	4 - 4F18DB - 424	135	–	●
			131000	13400	2.38				133000	13600	2.87	4 - 4F19DB - 424	135	–	●
2.90	8650	882	43600	4440	1.01	3.50	7170	731	65900	6720	1.22	4 - 4D17DC - 501	131	–	●
			88600	9030	1.24				91600	9340	1.49	4 - 4E17DC - 501	133	–	●
			88600	9030	1.34				91600	9340	1.62	4 - 4E18DB - 501	133	–	●
			128000	13000	1.93				131000	13400	2.33	4 - 4F18DB - 501	135	–	●
			128000	13000	2.01				131000	13400	2.43	4 - 4F19DB - 501	135	–	●
2.51	9980	1020	86000	8770	1.07	3.03	8270	843	89400	9110	1.29	4 - 4E17DC - 578	133	–	●
			86000	8770	1.16				89400	9110	1.40	4 - 4E18DB - 578	133	–	●
			126000	12800	1.68				129000	13100	2.02	4 - 4F18DB - 578	135	–	●
			126000	12800	1.74				129000	13100	2.10	4 - 4F19DB - 578	135	–	●
2.12	11800	1200	73200	7460	0.91	2.56	9780	997	86400	8810	1.09	4 - 4E17DC - 683	133	–	–
			73200	7460	0.98				86400	8810	1.19	4 - 4E18DB - 683	133	–	–
			123000	12500	1.42				126000	12800	1.71	4 - 4F18DB - 683	135	–	●
			123000	12500	1.47				126000	12800	1.78	4 - 4F19DA - 683	135	–	●
1.79	14000	1430	33900	3460	0.83	2.16	11600	1180	75800	7730	1.00	4 - 4E18DA - 809	133	–	–
			119000	12100	1.06				123000	12500	1.06	4 - 4F18DA - 809	135	–	●
			119000	12100	1.22				123000	12500	1.47	4 - 4F18DB - 809	135	–	●
			119000	12100	1.24				123000	12500	1.50	4 - 4F19DA - 809	135	–	●
1.52	16500	1680	115000	11700	1.03	1.83	13700	1400	120000	12200	1.06	4 - 4F18DA - 956	135	–	●
			115000	11700	1.03				120000	12200	1.24	4 - 4F18DB - 956	135	–	●
			115000	11700	1.05				120000	12200	1.27	4 - 4F19DA - 956	135	–	●
1.30	19300	1970	110000	11200	0.88	1.57	16000	1630	116000	11800	1.06	4 - 4F18DA - 1117	135	–	–
			110000	11200	0.88				116000	11800	1.06	4 - 4F18DB - 1117	135	–	–
			110000	11200	0.90				116000	11800	1.09	4 - 4F19DA - 1117	135	–	–

Selection Table for Gearmotors

3.7 kW	Frequency	Hz	50Hz	60Hz
	Motor poles	P	4	
	Motor speed n_1	r/min	1450	1750

IMPORTANT :
Please refer to page 54 for Gearmotor Selection Table notes.

Reduction ratio 11 ► 74

50Hz						60Hz						Model (refer to page 23)	Dimensional Drawing Page	Options Available Note 11	
Output Speed n_2	Output Torque T_{out}		Allowable Radial Load of Output Shaft Pro		SF_G	Output Speed n_2	Output Torque T_{out}		Allowable Radial Load of Output Shaft Pro		SF_G	Capacity Symbol - Frame Size - Reduction Ratio		AF Motor Note 10	High-Efficiency Motor
r/min	N·m	kgf·m	N	kgf		r/min	N·m	kgf·m	N	kgf					
138	236	24.1	16900	1720	2.59	167	195	19.9	16200	1650	2.59	5 - 4A120 - 11	125	●	●
			16900	1720	2.97				16200	1650	2.97	5 - 4A125 - 11	125	●	●
113	288	29.4	17800	1810	2.59	137	238	24.3	17000	1730	2.59	5 - 4A120 - 13	125	●	●
			17800	1810	2.97				17000	1730	2.97	5 - 4A125 - 13	125	●	●
104	315	32.1	18200	1860	2.59	125	261	26.6	17400	1770	2.59	5 - 4A120 - 14	125	●	●
			18200	1860	2.97				17400	1770	2.97	5 - 4A125 - 14	125	●	●
90.6	359	36.6	18700	1910	2.59	109	298	30.4	17900	1820	2.59	5 - 4A120 - 16	125	●	●
			18700	1910	2.97				17900	1820	2.97	5 - 4A125 - 16	125	●	●
82.9	393	40.1	19100	1950	2.59	100	326	33.2	18300	1870	2.59	5 - 4A120 - 18	125	●	●
			19100	1950	2.97				18300	1870	2.97	5 - 4A125 - 18	125	●	●
69.0	472	48.1	19900	2030	1.06	83.3	391	39.9	19100	1950	1.06	5 - 4A115 - 21	125	—	—
			19900	2030	1.77				19100	1950	1.77	5 - 4A120 - 21	125	●	●
			19900	2030	2.03				19100	1950	2.03	5 - 4A125 - 21	125	●	●
			19900	2030	2.73				19100	1950	2.73	5 - 4A140 - 21	125	●	●
64.7	503	51.3	20100	2050	1.77	78.1	417	42.5	19300	1970	1.77	5 - 4A120 - 22	125	●	●
			20100	2050	2.03				19300	1970	2.03	5 - 4A125 - 22	125	●	●
			20100	2050	2.56				19300	1970	2.56	5 - 4A140 - 22	125	●	●
59.2	550	56.1	20500	2090	1.77	71.4	456	46.5	19700	2010	1.77	5 - 4A120 - 25	125	●	●
			20500	2090	2.03				19700	2010	2.03	5 - 4A125 - 25	125	●	●
			20500	2090	2.34				19700	2010	2.34	5 - 4A140 - 25	125	●	●
51.8	629	64.1	21100	2150	1.06	62.5	521	53.1	20300	2070	1.06	5 - 4A115 - 28	125	—	—
			21100	2150	1.77				20300	2070	1.77	5 - 4A120 - 28	125	●	●
			21100	2150	2.03				20300	2070	2.03	5 - 4A125 - 28	125	●	●
41.2	791	80.6	21900	2230	1.06	49.7	655	66.8	21200	2160	1.06	5 - 4A115 - 35	125	—	—
			21900	2230	1.37				21200	2160	1.37	5 - 4A120 - 35	125	●	●
			21900	2230	1.60				21200	2160	1.60	5 - 4A125 - 35	125	●	●
			21900	2230	1.63				21200	2160	1.63	5 - 4A140 - 35	125	●	●
			31900	3250	3.25				30600	3120	3.25	5 - 4B140 - 35	127	●	●
37.7	865	88.2	22200	2260	1.06	45.5	717	73.1	21600	2200	1.06	5 - 4A115 - 39	125	—	—
			22200	2260	1.37				21600	2200	1.37	5 - 4A120 - 39	125	●	●
			22200	2260	1.49				21600	2200	1.49	5 - 4A125 - 39	125	●	●
			32600	3320	1.60				31200	3180	1.60	5 - 4B125 - 39	127	●	●
			32600	3320	2.97				31200	3180	2.97	5 - 4B140 - 39	127	●	●
31.9	1020	104	20000	2040	1.05	38.5	847	86.3	22200	2260	1.05	5 - 4A115 - 46	125	—	—
			20000	2040	1.26				22200	2260	1.26	5 - 4A120 - 46	125	●	●
			33800	3450	1.37				32500	3310	1.37	5 - 4B120 - 46	127	●	●
			33800	3450	1.60				32500	3310	1.60	5 - 4B125 - 46	127	●	●
			33800	3450	2.51				32500	3310	2.51	5 - 4B140 - 46	127	●	●
27.6	1180	120	16900	1720	1.05	33.3	977	100	20700	2110	1.05	5 - 4A115 - 53	125	—	—
			16900	1720	1.09				20700	2110	1.09	5 - 4A120 - 53	125	●	●
			34800	3550	1.37				33500	3410	1.37	5 - 4B120 - 53	127	●	●
			34800	3550	1.60				33500	3410	1.60	5 - 4B125 - 53	127	●	●
			34800	3550	2.18				33500	3410	2.18	5 - 4B140 - 53	127	●	●
24.4	1340	137	12300	1250	0.97	29.4	1110	113	18400	1880	0.97	5 - 4A115 - 60	125	—	—
			35700	3640	1.32				34400	3510	1.37	5 - 4B120 - 60	127	●	●
			35700	3640	1.53				34400	3510	1.53	5 - 4B125 - 60	127	●	●
			35700	3640	1.92				34400	3510	1.92	5 - 4B140 - 60	127	●	●
			51800	5280	2.73				49600	5060	2.73	5 - 4C140 - 60	129	●	●
21.6	1510	154	36400	3710	1.07	26.0	1250	127	35200	3590	1.07	5 - 4B120 - 67	127	●	●
			36400	3710	1.29				35200	3590	1.32	5 - 4B125 - 67	127	●	●
			36400	3710	1.70				35200	3590	1.70	5 - 4B140 - 67	127	●	●
			53300	5430	2.34				51000	5200	2.34	5 - 4C140 - 67	129	●	●
			53300	5430	2.56				51000	5200	2.97	5 - 4C145 - 67	129	●	●
19.7	1650	168	37000	3770	1.07	23.8	1370	140	35800	3650	1.07	5 - 4B120 - 74	127	●	●
			37000	3770	1.29				35800	3650	1.32	5 - 4B125 - 74	127	●	●
			37000	3770	1.56				35800	3650	1.56	5 - 4B140 - 74	127	●	●
			54400	5550	2.34				52100	5310	2.34	5 - 4C140 - 74	129	●	●
			54400	5550	2.56				52100	5310	2.97	5 - 4C145 - 74	129	●	●

Selection Table for Gearmotors

3.7 kW	Frequency	Hz	50Hz	60Hz
	Motor poles	P	4	
	Motor speed n_1	r/min	1450	1750

IMPORTANT :
Please refer to page 54 for Gearmotor Selection Table notes.

Reduction ratio 80 ► 207

50Hz						60Hz						Model (refer to page 23)	Dimensional Drawing Page	Options Available Note 11	
Output Speed n_2	Output Torque T_{out}		Allowable Radial Load of Output Shaft Pro		SF_G	Output Speed n_2	Output Torque T_{out}		Allowable Radial Load of Output Shaft Pro		SF_G	Capacity Symbol - Frame Size - Reduction Ratio		AF Motor Note 10	High-Efficiency Motor
r/min	N·m	kgf·m	N	kgf		r/min	N·m	kgf·m	N	kgf					
18.1	1800	183	36600	3730	1.07	21.9	1490	152	36300	3700	1.07	5 - 4B125 - 80	127	●	●
			36600	3730	1.43				36300	3700	1.43	5 - 4B140 - 80	127	●	●
			55300	5640	1.86				53100	5410	1.86	5 - 4C140 - 80	129	●	●
			55300	5640	2.14				53100	5410	2.14	5 - 4C145 - 80	129	●	●
			55300	5640	2.66				53100	5410	2.66	5 - 4C160 - 80	129	●	●
			55300	5640	2.86				53100	5410	2.86	5 - 4C165 - 80	129	●	●
16.6	1970	201	34700	3540	1.07	20.0	1630	166	36900	3760	1.07	5 - 4B125 - 88	127	●	●
			34700	3540	1.31				36900	3760	1.31	5 - 4B140 - 88	127	●	●
			56500	5760	1.86				54200	5520	1.86	5 - 4C140 - 88	129	●	●
			56500	5760	2.14				54200	5520	2.14	5 - 4C145 - 88	129	●	●
			56500	5760	2.61				54200	5520	2.61	5 - 4C160 - 88	129	●	●
			85800	8750	2.66				81900	8350	2.66	5 - 4D160 - 88	131	●	●
14.3	2280	232	30600	3120	0.94	17.2	1890	193	35600	3630	1.02	5 - 4B125 - 102	127	●	●
			30600	3120	1.13				35600	3630	1.13	5 - 4B140 - 102	127	●	●
			58200	5930	1.61				56000	5710	1.61	5 - 4C140 - 102	129	●	●
			58200	5930	2.04				56000	5710	2.04	5 - 4C145 - 102	129	●	●
			58200	5930	2.25				56000	5710	2.25	5 - 4C160 - 102	129	●	●
			89000	9070	2.58				85000	8660	2.84	5 - 4D160 - 102	131	●	●
12.9	2520	257	26500	2700	1.02	15.6	2090	213	33300	3390	1.02	5 - 4B140 - 112	127	●	●
			59200	6030	1.41				57100	5820	1.41	5 - 4C140 - 112	129	●	●
			59200	6030	1.69				57100	5820	2.04	5 - 4C145 - 112	129	●	●
			59200	6030	2.04				57100	5820	2.04	5 - 4C160 - 112	129	●	●
			91100	9290	2.16				87100	8880	2.61	5 - 4D160 - 112	131	●	●
			91100	9290	2.59				87100	8880	3.08	5 - 4D165 - 112	131	●	●
11.8	2750	280	21200	2160	0.93	14.3	2280	232	30600	3120	0.93	5 - 4B140 - 123	127	—	—
			60300	6150	1.41				58200	5930	1.41	5 - 4C140 - 123	129	●	●
			60300	6150	1.69				58200	5930	1.87	5 - 4C145 - 123	129	●	●
			60300	6150	1.87				58200	5930	1.87	5 - 4C160 - 123	129	●	●
			93100	9490	2.16				89000	9070	2.61	5 - 4D160 - 123	131	●	●
			93100	9490	2.59				89000	9070	3.08	5 - 4D165 - 123	131	●	●
9.63	3380	345	60700	6190	1.06	11.6	2800	285	60500	6170	1.06	5 - 4C140 - 151	129	●	●
			60700	6190	1.26				60500	6170	1.46	5 - 4C145 - 151	129	●	●
			60700	6190	1.52				60500	6170	1.52	5 - 4C160 - 151	129	●	●
			92800	9460	1.74				93500	9530	2.01	5 - 4D160 - 151	131	●	●
			92800	9460	2.11				93500	9530	2.14	5 - 4D165 - 151	131	●	●
			92800	9460	2.45				93500	9530	2.58	5 - 4D170 - 151	131	●	●
			92800	9460	2.58				93500	9530	2.58	5 - 4D175 - 151	131	●	●
			92800	9460	2.58				93500	9530	3.11	5 - 4D180 - 151	131	△	●
8.12	4010	409	55600	5670	1.00	9.80	3320	338	61100	6230	1.14	5 - 4C145 - 179	129	●	●
			55600	5670	1.28				61100	6230	1.28	5 - 4C160 - 179	129	●	●
			90400	9220	1.49				93000	9480	1.55	5 - 4D160 - 179	131	●	●
			90400	9220	1.78				93000	9480	2.04	5 - 4D165 - 179	131	●	●
			90400	9220	2.07				93000	9480	2.17	5 - 4D170 - 179	131	●	●
			90400	9220	2.17				93000	9480	2.17	5 - 4D175 - 179	131	●	●
			90400	9220	2.17				93000	9480	2.62	5 - 4D180 - 179	131	△	●
			97900	9980	2.67				99300	10100	2.89	5 - 4E175 - 179	133	●	●
			97900	9980	2.89				99300	10100	3.24	5 - 4E180 - 179	133	△	●
			97900	9980	2.89				99300	10100	3.49	5 - 4E185 - 179	133	△	●
7.02	4640	473	48900	4980	0.86	8.47	3840	391	57100	5820	0.99	5 - 4C145 - 207	129	—	—
			48900	4980	1.11				57100	5820	1.11	5 - 4C160 - 207	129	●	●
			87500	8920	1.19				91100	9290	1.19	5 - 4D160 - 207	131	●	●
			87500	8920	1.54				91100	9290	1.55	5 - 4D165 - 207	131	●	●
			87500	8920	1.79				91100	9290	1.88	5 - 4D170 - 207	131	●	●
			87500	8920	1.88				91100	9290	1.88	5 - 4D175 - 207	131	●	●
			87500	8920	1.88				91100	9290	2.27	5 - 4D180 - 207	131	△	●
			96600	9850	2.24				98200	10000	2.24	5 - 4E175 - 207	133	●	●
			96600	9850	2.50				98200	10000	2.64	5 - 4E180 - 207	133	△	●
			96600	9850	2.50				98200	10000	3.02	5 - 4E185 - 207	133	△	●
			135000	13800	2.64				137000	14000	2.64	5 - 4F180 - 207	135	△	●

Selection Table for Gearmotors

3.7 kW	Frequency	Hz	50Hz	60Hz
	Motor poles	P	4	
	Motor speed n_1	r/min	1450	1750

IMPORTANT :
Please refer to page 54 for Gearmotor Selection Table notes.

Reduction ratio 249 ► 956

50Hz						60Hz						Model (refer to page 23)	Dimensional Drawing Page	Options Available Note 11	
Output Speed n_2	Output Torque T_{out}		Allowable Radial Load of Output Shaft Pro		SF_G	Output Speed n_2	Output Torque T_{out}		Allowable Radial Load of Output Shaft Pro		SF_G	Capacity Symbol - Frame Size - Reduction Ratio		AF Motor Note 10	High-Efficiency Motor
r/min	N·m	kgf·m	N	kgf		r/min	N·m	kgf·m	N	kgf					
5.84	5580	569	33900	3460	0.92	7.04	4630	472	49000	4990	0.92	5 - 4C160 - 249	129	–	–
			82200	8380	1.28				87600	8930	1.53	5 - 4D165 - 249	131	●	●
			82200	8380	1.49				87600	8930	1.56	5 - 4D170 - 249	131	●	●
			82200	8380	1.56				87600	8930	1.56	5 - 4D175 - 249	131	●	●
			82200	8380	1.56				87600	8930	1.88	5 - 4D180 - 249	131	△	●
			94800	9660	1.89				96700	9860	1.93	5 - 4E175 - 249	133	●	●
			94800	9660	2.08				96700	9860	2.38	5 - 4E180 - 249	133	△	●
			94800	9660	2.08				96700	9860	2.51	5 - 4E185 - 249	133	△	●
			134000	13700	2.65				135000	13800	2.65	5 - 4F185 - 249	135	△	●
4.76	6840	697	72800	7420	0.87	5.75	5670	578	81700	8330	0.94	5 - 4D160 - 305	131	–	–
			72800	7420	1.02				81700	8330	1.05	5 - 4D165 - 305	131	●	●
			72800	7420	1.27				81700	8330	1.27	5 - 4D175 - 305	131	●	●
			72800	7420	1.27				81700	8330	1.54	5 - 4D180 - 305	131	△	●
			92200	9400	1.52				94600	9640	1.52	5 - 4E175 - 305	133	●	●
			92200	9400	1.70				94600	9640	1.93	5 - 4E180 - 305	133	△	●
			92200	9400	1.70				94600	9640	2.05	5 - 4E185 - 305	133	△	●
			131000	13400	2.32				133000	13600	2.32	5 - 4F185 - 305	135	△	●
			131000	13400	2.63				133000	13600	3.18	5 - 4F190 - 305	135	△	●
3.98	7760	791	58500	5960	0.92	4.81	6430	655	73400	7480	1.11	5 - 4D16DC - 364	131	●	●
			58500	5960	1.12				73400	7480	1.36	5 - 4D17DC - 364	131	●	●
			90400	9220	1.38				93100	9490	1.66	5 - 4E17DC - 364	133	●	●
			90400	9220	1.49				93100	9490	1.80	5 - 4E18DB - 364	133	●	●
			130000	13300	2.15				132000	13500	2.59	5 - 4F18DB - 364	135	●	●
			130000	13300	2.24				132000	13500	2.71	5 - 4F19DB - 364	135	●	●
3.42	9030	920	34700	3540	0.97	4.13	7480	762	62100	6330	1.17	5 - 4D17DC - 424	131	●	●
			87900	8960	1.18				91000	9280	1.43	5 - 4E17DC - 424	133	●	●
			87900	8960	1.28				91000	9280	1.55	5 - 4E18DB - 424	133	●	●
			128000	13000	1.81				130000	13300	2.19	5 - 4F18DB - 424	135	●	●
			128000	13000	1.93				130000	13300	2.33	5 - 4F19DB - 424	135	●	●
2.90	10700	1090	84600	8620	1.00	3.50	8840	901	88200	8990	1.21	5 - 4E17DC - 501	133	●	●
			84600	8620	1.09				88200	8990	1.31	5 - 4E18DB - 501	133	●	●
			125000	12700	1.56				128000	13000	1.89	5 - 4F18DB - 501	135	●	●
			125000	12700	1.63				128000	13000	1.97	5 - 4F19DB - 501	135	●	●
2.51	12300	1250	66600	6790	0.87	3.03	10200	1040	85500	8720	1.05	5 - 4E17DC - 578	133	●	●
			66600	6790	0.94				85500	8720	1.14	5 - 4E18DB - 578	133	●	●
			122000	12400	1.36				126000	12800	1.64	5 - 4F18DB - 578	135	●	●
			122000	12400	1.41				126000	12800	1.71	5 - 4F19DB - 578	135	●	●
2.12	14600	1490	118000	12000	1.15	2.56	12100	1230	123000	12500	1.39	5 - 4F18DB - 683	135	●	●
			118000	12000	1.20				123000	12500	1.44	5 - 4F19DA - 683	135	●	●
1.79	17200	1750	114000	11600	0.86	2.16	14300	1460	119000	12100	0.86	5 - 4F18DA - 809	135	–	–
			114000	11600	0.99				119000	12100	1.19	5 - 4F18DB - 809	135	●	●
			114000	11600	1.01				119000	12100	1.22	5 - 4F19DA - 809	135	●	●
1.52	20400	2080	99400	10100	0.84	1.83	16900	1720	114000	11600	0.86	5 - 4F18DA - 956	135	–	–
			99400	10100	0.84				114000	11600	1.01	5 - 4F18DB - 956	135	●	●
			99400	10100	0.85				114000	11600	1.03	5 - 4F19DA - 956	135	●	●

Selection Table for Gearmotors

5.5 kW	Frequency	Hz	50Hz	60Hz
	Motor poles	P	4	
	Motor speed n_1	r/min	1450	1750

IMPORTANT :
Please refer to page 54 for Gearmotor Selection Table notes.

Reduction ratio 11 ► 60

50Hz						60Hz						Model (refer to page 23)	Dimensional Drawing Page	Options Available Note 11	
Output Speed n_2	Output Torque T_{out}		Allowable Radial Load of Output Shaft Pro		SF_G	Output Speed n_2	Output Torque T_{out}		Allowable Radial Load of Output Shaft Pro		SF_G	Capacity Symbol - Frame Size - Reduction Ratio		AF Motor Note 10	High-Efficiency Motor
r/min	N·m	kgf·m	N	kgf		r/min	N·m	kgf·m	N	kgf					
138	351	35.8	16300	1660	1.75	167	291	29.7	15600	1590	1.75	8 - 4A120 - 11	125	●	●
			16300	1660	2.00				15600	1590	2.00	8 - 4A125 - 11	125	●	●
			16300	1660	3.33				15600	1590	3.68	8 - 4A145 - 11	125	●	●
113	428	43.6	17000	1730	1.75	137	354	36.1	16300	1660	1.75	8 - 4A120 - 13	125	●	●
			17000	1730	2.00				16300	1660	2.00	8 - 4A125 - 13	125	●	●
104	468	47.7	17300	1760	1.75	125	387	39.4	16700	1700	1.75	8 - 4A120 - 14	125	●	●
			17300	1760	2.00				16700	1700	2.00	8 - 4A125 - 14	125	●	●
			17300	1760	2.76				16700	1700	2.76	8 - 4A140 - 14	125	●	●
90.6	534	54.4	17800	1810	1.75	109	443	45.2	17100	1740	1.75	8 - 4A120 - 16	125	●	●
			17800	1810	2.00				17100	1740	2.00	8 - 4A125 - 16	125	●	●
			17800	1810	2.41				17100	1740	2.41	8 - 4A140 - 16	125	●	●
82.9	584	59.5	18100	1850	1.75	100	484	49.3	17500	1780	1.75	8 - 4A120 - 18	125	●	●
			18100	1850	2.00				17500	1780	2.00	8 - 4A125 - 18	125	●	●
			18100	1850	2.21				17500	1780	2.21	8 - 4A140 - 18	125	●	●
69.0	701	71.5	18600	1900	1.19	83.3	581	59.2	18100	1850	1.19	8 - 4A120 - 21	125	●	●
			18600	1900	1.37				18100	1850	1.37	8 - 4A125 - 21	125	●	●
			18600	1900	1.84				18100	1850	1.84	8 - 4A140 - 21	125	●	●
			27300	2780	2.36				26100	2660	2.36	8 - 4B140 - 21	127	●	●
			27300	2780	2.75				26100	2660	2.75	8 - 4B145 - 21	127	●	●
64.7	748	76.2	18800	1920	1.19	78.1	620	63.2	18200	1860	1.19	8 - 4A120 - 22	125	●	●
			18800	1920	1.37				18200	1860	1.37	8 - 4A125 - 22	125	●	●
			18800	1920	1.72				18200	1860	1.72	8 - 4A140 - 22	125	●	●
			27600	2810	2.36				26500	2700	2.36	8 - 4B140 - 22	127	●	●
			27600	2810	2.75				26500	2700	2.75	8 - 4B145 - 22	127	●	●
59.2	818	83.4	19100	1950	1.19	71.4	678	69.1	18500	1890	1.19	8 - 4A120 - 25	125	●	●
			19100	1950	1.37				18500	1890	1.37	8 - 4A125 - 25	125	●	●
			19100	1950	1.58				18500	1890	1.58	8 - 4A140 - 25	125	●	●
			28200	2870	2.36				27100	2760	2.36	8 - 4B140 - 25	127	●	●
			28200	2870	2.75				27100	2760	2.75	8 - 4B145 - 25	127	●	●
51.8	935	95.3	19400	1980	1.19	62.5	775	79.0	18900	1930	1.19	8 - 4A120 - 28	125	●	●
			19400	1980	1.37				18900	1930	1.37	8 - 4A125 - 28	125	●	●
			29000	2960	2.36				27900	2840	2.36	8 - 4B140 - 28	127	●	●
			29000	2960	2.75				27900	2840	2.75	8 - 4B145 - 28	127	●	●
41.2	1180	120	17000	1730	1.08	49.7	974	99.3	19500	1990	1.08	8 - 4A125 - 35	125	●	●
			17000	1730	1.10				19500	1990	1.10	8 - 4A140 - 35	125	●	●
			30300	3090	2.19				29200	2980	2.19	8 - 4B140 - 35	127	●	●
			44100	4500	2.36				42200	4300	2.36	8 - 4C140 - 35	129	●	●
			44100	4500	2.75				42200	4300	2.75	8 - 4C145 - 35	129	●	●
37.7	1290	131	14000	1430	1.00	45.5	1070	109	19200	1960	1.00	8 - 4A125 - 39	125	●	●
			30800	3140	1.08				29800	3040	1.08	8 - 4B125 - 39	127	●	●
			30800	3140	2.00				29800	3040	2.00	8 - 4B140 - 39	127	●	●
			45100	4600	2.36				43200	4400	2.36	8 - 4C140 - 39	129	●	●
			45100	4600	2.75				43200	4400	2.75	8 - 4C145 - 39	129	●	●
31.9	1520	155	31700	3230	1.08	38.5	1260	128	30700	3130	1.08	8 - 4B125 - 46	127	●	●
			31700	3230	1.69				30700	3130	1.69	8 - 4B140 - 46	127	●	●
			46800	4770	2.36				44900	4580	2.36	8 - 4C140 - 46	129	●	●
			46800	4770	2.75				44900	4580	2.75	8 - 4C145 - 46	129	●	●
27.6	1750	178	32400	3300	1.08	33.3	1450	148	31500	3210	1.08	8 - 4B125 - 53	127	●	●
			32400	3300	1.47				31500	3210	1.47	8 - 4B140 - 53	127	●	●
			48200	4910	2.18				46300	4720	2.18	8 - 4C140 - 53	129	●	●
			48200	4910	2.64				46300	4720	2.65	8 - 4C145 - 53	129	●	●
			48200	4910	2.93				46300	4720	2.93	8 - 4C160 - 53	129	●	●
24.4	1990	203	32900	3350	1.03	29.4	1650	168	32100	3270	1.03	8 - 4B125 - 60	127	●	●
			32900	3350	1.29				32100	3270	1.29	8 - 4B140 - 60	127	●	●
			49400	5040	1.84				47600	4850	1.84	8 - 4C140 - 60	129	●	●
			49400	5040	2.18				47600	4850	2.18	8 - 4C145 - 60	129	●	●
			49400	5040	2.38				47600	4850	2.38	8 - 4C160 - 60	129	●	●
			49400	5040	2.59				47600	4850	2.59	8 - 4C165 - 60	129	●	●

Selection Table for Gearmotors

5.5 kW	Frequency	Hz	50Hz	60Hz
	Motor poles	P	4	
	Motor speed n_1	r/min	1450	1750

IMPORTANT :
Please refer to page 54 for Gearmotor Selection Table notes.

Reduction ratio 67 ► 123

50Hz						60Hz						Model (refer to page 23)	Dimensional Drawing Page	Options Available Note 11	
Output Speed n_2	Output Torque T_{out}		Allowable Radial Load of Output Shaft Pro		SF_G	Output Speed n_2	Output Torque T_{out}		Allowable Radial Load of Output Shaft Pro		SF_G	Capacity Symbol - Frame Size - Reduction Ratio		AF Motor Note 10	High-Efficiency Motor
r/min	N·m	kgf·m	N	kgf		r/min	N·m	kgf·m	N	kgf					
21.6	2240	228	31100	3170	1.15	26.0	1860	190	32600	3320	1.15	8 - 4B140 - 67	127	●	●
			50500	5150	1.57				48700	4960	1.57	8 - 4C140 - 67	129	●	●
			50500	5150	1.73				48700	4960	2.00	8 - 4C145 - 67	129	●	●
			50500	5150	2.29				48700	4960	2.29	8 - 4C160 - 67	129	●	●
			77900	7940	2.35				74500	7590	2.35	8 - 4D160 - 67	131	●	●
			77900	7940	2.91				74500	7590	2.93	8 - 4D165 - 67	131	●	●
19.7	2450	250	27700	2820	0.87	23.8	2030	207	33000	3360	0.89	8 - 4B125 - 74	127	—	—
			27700	2820	1.05				33000	3360	1.05	8 - 4B140 - 74	127	●	●
			51400	5240	1.57				49600	5060	1.57	8 - 4C140 - 74	129	●	●
			51400	5240	1.73				49600	5060	2.00	8 - 4C145 - 74	129	●	●
			51400	5240	2.09				49600	5060	2.09	8 - 4C160 - 74	129	●	●
			79600	8110	2.35				76100	7760	2.35	8 - 4D160 - 74	131	●	●
			79600	8110	2.91				76100	7760	2.93	8 - 4D165 - 74	131	●	●
18.1	2670	272	52100	5310	1.25	21.9	2210	225	50400	5140	1.25	8 - 4C140 - 80	129	●	●
			52100	5310	1.44				50400	5140	1.44	8 - 4C145 - 80	129	●	●
			52100	5310	1.79				50400	5140	1.79	8 - 4C160 - 80	129	●	●
			52100	5310	1.92				50400	5140	1.92	8 - 4C165 - 80	129	●	●
			81100	8270	2.44				77700	7920	2.75	8 - 4D165 - 80	131	●	●
			81100	8270	2.84				77700	7920	2.87	8 - 4D170 - 80	131	●	●
16.6	2920	298	15900	1620	0.88	20.0	2420	247	28300	2880	0.88	8 - 4B140 - 88	127	—	—
			52900	5390	1.25				51300	5230	1.25	8 - 4C140 - 88	129	●	●
			52900	5390	1.44				51300	5230	1.44	8 - 4C145 - 88	129	●	●
			52900	5390	1.76				51300	5230	1.76	8 - 4C160 - 88	129	●	●
			82800	8440	1.79				79300	8080	1.79	8 - 4D160 - 88	131	●	●
			82800	8440	2.44				79300	8080	2.75	8 - 4D165 - 88	131	●	●
			82800	8440	2.84				79300	8080	2.87	8 - 4D170 - 88	131	●	●
			82800	8440	2.98				79300	8080	2.98	8 - 4D175 - 88	131	●	●
			82800	8440	2.98				79300	8080	3.60	8 - 4D180 - 88	131	△	●
14.3	3390	346	54000	5500	1.08	17.2	2810	286	52600	5360	1.08	8 - 4C140 - 102	129	●	●
			54000	5500	1.37				52600	5360	1.37	8 - 4C145 - 102	129	●	●
			54000	5500	1.52				52600	5360	1.52	8 - 4C160 - 102	129	●	●
			85500	8720	1.74				82100	8370	1.91	8 - 4D160 - 102	131	●	●
			85500	8720	2.07				82100	8370	2.07	8 - 4D165 - 102	131	●	●
			85500	8720	2.45				82100	8370	2.57	8 - 4D170 - 102	131	●	●
			85500	8720	2.57				82100	8370	2.57	8 - 4D175 - 102	131	●	●
			85500	8720	2.57				82100	8370	3.10	8 - 4D180 - 102	131	△	●
			99100	10100	2.90				100000	10200	2.90	8 - 4E175 - 102	133	●	●
			99100	10100	2.90				100000	10200	3.50	8 - 4E180 - 102	133	△	●
12.9	3740	381	54600	5570	1.14	15.6	3100	316	53300	5430	1.37	8 - 4C145 - 112	129	●	●
			54600	5570	1.37				53300	5430	1.37	8 - 4C160 - 112	129	●	●
			87200	8890	1.46				83800	8540	1.76	8 - 4D160 - 112	131	●	●
			87200	8890	1.74				83800	8540	2.07	8 - 4D165 - 112	131	●	●
			87200	8890	2.04				83800	8540	2.18	8 - 4D170 - 112	131	●	●
			87200	8890	2.33				83800	8540	2.33	8 - 4D175 - 112	131	●	●
			87300	8900	2.33				83900	8550	2.81	8 - 4D180 - 112	131	△	●
			98400	10000	2.62				99700	10200	2.75	8 - 4E175 - 112	133	●	●
11.8	4090	417	54800	5590	0.95	14.3	3390	346	54000	5500	0.95	8 - 4C140 - 123	129	—	—
			54800	5590	1.14				54000	5500	1.26	8 - 4C145 - 123	129	●	●
			88900	9060	1.46				85500	8720	1.76	8 - 4D160 - 123	131	●	●
			88900	9060	1.74				85500	8720	2.07	8 - 4D165 - 123	131	●	●
			88900	9060	2.04				85500	8720	2.13	8 - 4D170 - 123	131	●	●
			88900	9060	2.13				85500	8720	2.13	8 - 4D175 - 123	131	●	●
			88900	9060	2.13				85500	8720	2.57	8 - 4D180 - 123	131	△	●
			97700	9960	2.62				99100	10100	2.75	8 - 4E175 - 123	133	●	●
			97700	9960	2.84				99100	10100	3.42	8 - 4E180 - 123	133	△	●

Selection Table for Gearmotors

5.5 kW	Frequency	Hz	50Hz	60Hz
	Motor poles	P	4	
	Motor speed n_1	r/min	1450	1750

IMPORTANT :
Please refer to page 54 for Gearmotor Selection Table notes.

Reduction ratio 151 ► 424

50Hz						60Hz						Model (refer to page 23)	Dimensional Drawing Page	Options Available Note 11	
Output Speed n_2	Output Torque T_{out}		Allowable Radial Load of Output Shaft Pro		SF_G	Output Speed n_2	Output Torque T_{out}		Allowable Radial Load of Output Shaft Pro		SF_G	Capacity - Frame Size - Reduction Ratio		AF Motor Note 10	High-Efficiency Motor
r/min	N·m	kgf·m	N	kgf		r/min	N·m	kgf·m	N	kgf					
9.63	5030	513	43700	4450	0.85	11.6	4160	424	54100	5510	0.98	8 - 4C145 - 151	129	–	–
			43700	4450	1.02				54100	5510	1.02	8 - 4C160 - 151	129	●	●
			85500	8720	1.17				89200	9090	1.35	8 - 4D160 - 151	131	●	●
			85500	8720	1.42				89200	9090	1.44	8 - 4D165 - 151	131	●	●
			85500	8720	1.65				89200	9090	1.73	8 - 4D170 - 151	131	●	●
			85500	8720	1.73				89200	9090	1.73	8 - 4D175 - 151	131	●	●
			85500	8720	1.73				89200	9090	2.09	8 - 4D180 - 151	131	△	●
			95900	9780	2.05				97600	9950	2.05	8 - 4E175 - 151	133	●	●
			95900	9780	2.31				97600	9950	2.75	8 - 4E180 - 151	133	△	●
			95900	9780	2.31				97600	9950	2.79	8 - 4E185 - 151	133	△	●
			135000	13800	2.75				136000	13900	2.75	8 - 4F180 - 151	135	△	●
8.12	5960	608	24200	2470	0.86	9.80	4940	504	44900	4580	0.86	8 - 4C160 - 179	129	–	–
			79700	8120	1.00				86000	8770	1.05	8 - 4D160 - 179	131	●	●
			79700	8120	1.20				86000	8770	1.37	8 - 4D165 - 179	131	●	●
			79700	8120	1.39				86000	8770	1.46	8 - 4D170 - 179	131	●	●
			79700	8120	1.46				86000	8770	1.46	8 - 4D175 - 179	131	●	●
			79700	8120	1.46				86000	8770	1.77	8 - 4D180 - 179	131	●	●
			94000	9580	1.79				96000	9790	1.95	8 - 4E175 - 179	133	●	●
			94000	9580	1.95				96000	9790	2.18	8 - 4E180 - 179	133	●	●
			94000	9580	1.95				96000	9790	2.35	8 - 4E185 - 179	133	●	●
			133000	13600	2.18				135000	13800	2.18	8 - 4F180 - 179	135	●	●
			133000	13600	2.75				135000	13800	2.75	8 - 4F185 - 179	135	●	●
7.02	6900	703	72300	7370	0.80	8.47	5710	582	81400	8300	0.80	8 - 4D160 - 207	131	–	–
			72300	7370	1.03				81400	8300	1.05	8 - 4D165 - 207	131	●	●
			72300	7370	1.20				81400	8300	1.26	8 - 4D170 - 207	131	●	●
			72300	7370	1.26				81400	8300	1.26	8 - 4D175 - 207	131	●	●
			72300	7370	1.26				81400	8300	1.53	8 - 4D180 - 207	131	●	●
			92100	9390	1.51				94500	9630	1.51	8 - 4E175 - 207	133	●	●
			92100	9390	1.68				94500	9630	1.77	8 - 4E180 - 207	133	●	●
			92100	9390	1.68				94500	9630	2.03	8 - 4E185 - 207	133	●	●
			131000	13400	1.77				133000	13600	1.77	8 - 4F180 - 207	135	●	●
			131000	13400	2.18				133000	13600	2.18	8 - 4F185 - 207	135	●	●
			131000	13400	2.61				133000	13600	2.78	8 - 4F190 - 207	135	△	●
			131000	13400	2.61				133000	13600	3.15	8 - 4F195 - 207	135	△	●
5.84	8300	846	56900	5800	0.86	7.04	6880	701	72500	7390	1.03	8 - 4D165 - 249	131	●	●
			56900	5800	1.05				72500	7390	1.05	8 - 4D175 - 249	131	●	●
			56900	5800	1.05				72500	7390	1.27	8 - 4D180 - 249	131	●	●
			89300	9100	1.27				92200	9400	1.30	8 - 4E175 - 249	133	●	●
			89300	9100	1.40				92200	9400	1.60	8 - 4E180 - 249	133	●	●
			89300	9100	1.40				92200	9400	1.69	8 - 4E185 - 249	133	●	●
			129000	13100	1.60				131000	13400	1.60	8 - 4F180 - 249	135	●	●
			129000	13100	1.78				131000	13400	1.78	8 - 4F185 - 249	135	●	●
			129000	13100	2.17				131000	13400	2.45	8 - 4F190 - 249	135	△	●
			129000	13100	2.17				131000	13400	2.62	8 - 4F195 - 249	135	△	●
4.76	10200	1040	1210	123	0.86	5.75	8430	859	55100	5620	0.86	8 - 4D175 - 305	131	–	–
			1210	123	0.86				55100	5620	1.03	8 - 4D180 - 305	131	–	–
			85600	8730	1.02				89100	9080	1.02	8 - 4E175 - 305	133	●	●
			85600	8730	1.14				89100	9080	1.30	8 - 4E180 - 305	133	●	●
			85600	8730	1.14				89100	9080	1.38	8 - 4E185 - 305	133	●	●
			126000	12800	1.56				129000	13100	1.56	8 - 4F185 - 305	135	●	●
			126000	12800	1.77				129000	13100	2.14	8 - 4F190 - 305	135	△	●
3.98	11500	1170	76300	7780	0.93	4.81	9560	975	86800	8850	1.12	8 - 4E17DC - 364	133	●	●
			76300	7780	1.01				86800	8850	1.21	8 - 4E18DB - 364	133	●	●
			123000	12500	1.45				127000	12900	1.75	8 - 4F18DB - 364	135	●	●
			123000	12500	1.51				127000	12900	1.82	8 - 4F19DB - 364	135	●	●
3.42	13400	1370	47900	4880	0.86	4.13	11100	1130	80800	8240	1.04	8 - 4E18DB - 424	133	●	●
			120000	12200	1.22				124000	12600	1.47	8 - 4F18DB - 424	135	●	●
			120000	12200	1.30				124000	12600	1.56	8 - 4F19DB - 424	135	●	●

Selection Table for Gearmotors

5.5 kW

Frequency	Hz	50Hz	60Hz
Motor poles	P	4	
Motor speed n_1	r/min	1450	1750

IMPORTANT :
Please refer to page 54 for Gearmotor Selection Table notes.

Reduction ratio 364 ► 683

50Hz						60Hz						Model (refer to page 23)	Dimensional Drawing Page	Options Available Note 11	
Output Speed n_2	Output Torque T_{out}		Allowable Radial Load of Output Shaft Pro		SF_G	Output Speed n_2	Output Torque T_{out}		Allowable Radial Load of Output Shaft Pro		SF_G	Capacity Symbol - Frame Size - Reduction Ratio		AF Motor Note 10	High-Efficiency Motor
r/min	N·m	kgf·m	N	kgf		r/min	N·m	kgf·m	N	kgf					
3.98	11500	1170	76300	7780	0.93	4.81	9560	975	86800	8850	1.12	8 - 4E17DC - 364	133	●	●
			76300	7780	1.01				86800	8850	1.21	8 - 4E18DB - 364	133	●	●
			123000	12500	1.45				127000	12900	1.75	8 - 4F18DB - 364	135	●	●
			123000	12500	1.51				127000	12900	1.82	8 - 4F19DB - 364	135	●	●
3.42	13400	1370	47900	4880	0.86	4.13	11100	1130	80800	8240	1.04	8 - 4E18DB - 424	133	●	●
			120000	12200	1.22				124000	12600	1.47	8 - 4F18DB - 424	135	●	●
			120000	12200	1.30				124000	12600	1.56	8 - 4F19DB - 424	135	●	●
2.90	15900	1620	116000	11800	1.05	3.50	13100	1340	121000	12300	1.27	8 - 4F18DB - 501	135	●	●
			116000	11800	1.10				121000	12300	1.32	8 - 4F19DB - 501	135	●	●
2.51	18300	1870	112000	11400	0.92	3.03	15200	1550	117000	11900	1.10	8 - 4F18DB - 578	135	●	●
			112000	11400	0.95				117000	11900	1.15	8 - 4F19DB - 578	135	●	●
2.12	21600	2200	79200	8070	0.80	2.56	17900	1820	113000	11500	0.97	8 - 4F19DA - 683	135	—	—

7.5 kW

Frequency	Hz	50Hz	60Hz
Motor poles	P	4	
Motor speed n_1	r/min	1450	1750

IMPORTANT :
Please refer to page 54 for Gearmotor Selection Table notes.

Reduction ratio 11 ► 22

50Hz						60Hz						Model (refer to page 23)	Dimensional Drawing Page	Options Available Note 11	
Output Speed n_2	Output Torque T_{out}		Allowable Radial Load of Output Shaft Pro		SF_G	Output Speed n_2	Output Torque T_{out}		Allowable Radial Load of Output Shaft Pro		SF_G	Capacity Symbol - Frame Size - Reduction Ratio		AF Motor Note 10	High-Efficiency Motor
r/min	N·m	kgf·m	N	kgf		r/min	N·m	kgf·m	N	kgf					
138	478	48.7	15600	1590	1.28	167	396	40.4	15100	1540	1.28	10 - 4A120 - 11	125	●	●
			15600	1590	1.47				15100	1540	1.47	10 - 4A125 - 11	125	●	●
			15600	1590	2.44				15100	1540	2.53	10 - 4A140 - 11	125	●	●
			22500	2290	2.53				21500	2190	2.53	10 - 4B140 - 11	127	●	●
			22500	2290	2.93				21500	2190	2.93	10 - 4B145 - 11	127	●	●
113	583	59.4	16200	1650	1.28	137	483	49.2	15600	1590	1.28	10 - 4A120 - 13	125	●	●
			16200	1650	1.47				15600	1590	1.47	10 - 4A125 - 13	125	●	●
			16200	1650	2.20				15600	1590	2.21	10 - 4A140 - 13	125	●	●
			23600	2410	2.53				22600	2300	2.53	10 - 4B140 - 13	127	●	●
			23600	2410	2.93				22600	2300	2.93	10 - 4B145 - 13	127	●	●
104	638	65.0	16400	1670	1.28	125	528	53.8	15900	1620	1.28	10 - 4A120 - 14	125	●	●
			16400	1670	1.47				15900	1620	1.47	10 - 4A125 - 14	125	●	●
			16400	1670	2.02				15900	1620	2.02	10 - 4A140 - 14	125	●	●
			24100	2460	2.53				23100	2350	2.53	10 - 4B140 - 14	127	●	●
			24100	2460	2.93				23100	2350	2.93	10 - 4B145 - 14	127	●	●
90.6	729	74.3	16700	1700	1.28	109	604	61.6	16300	1660	1.28	10 - 4A120 - 16	125	●	●
			16700	1700	1.47				16300	1660	1.47	10 - 4A125 - 16	125	●	●
			16700	1700	1.77				16300	1660	1.77	10 - 4A140 - 16	125	●	●
			24800	2530	2.53				23800	2430	2.53	10 - 4B140 - 16	127	●	●
			24800	2530	2.93				23800	2430	2.93	10 - 4B145 - 16	127	●	●
82.9	797	81.2	16900	1720	1.28	100	660	67.3	16500	1680	1.28	10 - 4A120 - 18	125	●	●
			16900	1720	1.47				16500	1680	1.47	10 - 4A125 - 18	125	●	●
			16900	1720	1.62				16500	1680	1.62	10 - 4A140 - 18	125	●	●
			25300	2580	2.53				24300	2480	2.53	10 - 4B140 - 18	127	●	●
			25300	2580	2.93				24300	2480	2.93	10 - 4B145 - 18	127	●	●
69.0	956	97.5	17300	1760	1.00	83.3	792	80.7	16900	1720	1.00	10 - 4A125 - 21	125	●	●
			17300	1760	1.35				16900	1720	1.35	10 - 4A140 - 21	125	●	●
			26200	2670	1.73				25200	2570	1.73	10 - 4B140 - 21	127	●	●
			26200	2670	2.01				25200	2570	2.01	10 - 4B145 - 21	127	●	●
			26200	2670	2.69				25200	2570	2.69	10 - 4B160 - 21	127	●	●
64.7	1020	104	17300	1760	1.00	78.1	845	86.1	17000	1730	1.00	10 - 4A125 - 22	125	●	●
			17300	1760	1.26				17000	1730	1.26	10 - 4A140 - 22	125	●	●
			26500	2700	1.73				25500	2600	1.73	10 - 4B140 - 22	127	●	●
			26500	2700	2.01				25500	2600	2.01	10 - 4B145 - 22	127	●	●
			26500	2700	2.52				25500	2600	2.52	10 - 4B160 - 22	127	●	●
			38600	3930	2.71				36900	3760	2.71	10 - 4C160 - 22	129	●	●

Selection Table for Gearmotors

7.5 kW	Frequency	Hz	50Hz	60Hz
	Motor poles	P	4	
	Motor speed n_1	r/min	1450	1750

IMPORTANT :
Please refer to page 54 for Gearmotor Selection Table notes.

Reduction ratio 25 ► 74

50Hz						60Hz						Model (refer to page 23)	Dimensional Drawing Page	Options Available Note 11	
Output Speed n_2	Output Torque T_{out}		Allowable Radial Load of Output Shaft Pro		SF_G	Output Speed n_2	Output Torque T_{out}		Allowable Radial Load of Output Shaft Pro		SF_G	Capacity Symbol - Frame Size - Reduction Ratio		AF Motor Note 10	High-Efficiency Motor
r/min	N·m	kgf·m	N	kgf		r/min	N·m	kgf·m	N	kgf					
59.2	1120	114	17500	1780	1.00	71.4	925	94.3	17200	1750	1.00	10 - 4A125 - 25	125	●	●
			17500	1780	1.16				17200	1750	1.16	10 - 4A140 - 25	125	●	●
			26900	2740	1.73				26000	2650	1.73	10 - 4B140 - 25	127	●	●
			26900	2740	2.01				26000	2650	2.01	10 - 4B145 - 25	127	●	●
			26900	2740	2.30				26000	2650	2.30	10 - 4B160 - 25	127	●	●
			39400	4020	2.71				37700	3840	2.71	10 - 4C160 - 25	129	●	●
51.8	1280	130	14400	1470	1.01	62.5	1060	108	17400	1770	1.01	10 - 4A140 - 28	125	●	●
			27600	2810	1.73				26700	2720	1.73	10 - 4B140 - 28	127	●	●
			27600	2810	2.02				26700	2720	2.02	10 - 4B145 - 28	127	●	●
			40600	4140	2.63				38900	3970	2.63	10 - 4C160 - 28	129	●	●
41.2	1600	163	28500	2910	1.60	49.7	1330	136	27700	2820	1.60	10 - 4B140 - 35	127	●	●
			42500	4330	1.73				40900	4170	1.73	10 - 4C140 - 35	129	●	●
			42500	4330	2.01				40900	4170	2.01	10 - 4C145 - 35	129	●	●
			42500	4330	2.63				40900	4170	2.63	10 - 4C160 - 35	129	●	●
37.7	1750	178	28800	2940	1.47	45.5	1450	148	28100	2860	1.47	10 - 4B140 - 39	127	●	●
			43300	4410	1.73				41700	4250	1.73	10 - 4C140 - 39	129	●	●
			43300	4410	2.01				41700	4250	2.01	10 - 4C145 - 39	129	●	●
			43300	4410	2.63				41700	4250	2.63	10 - 4C160 - 39	129	●	●
			43300	4410	2.93				41700	4250	2.93	10 - 4C165 - 39	129	●	●
31.9	2070	211	29300	2990	1.24	38.5	1720	175	28800	2940	1.24	10 - 4B140 - 46	127	●	●
			44700	4560	1.73				43100	4390	1.73	10 - 4C140 - 46	129	●	●
			44700	4560	2.01				43100	4390	2.01	10 - 4C145 - 46	129	●	●
			44700	4560	2.48				43100	4390	2.48	10 - 4C160 - 46	129	●	●
			69100	7040	2.63				66100	6740	2.63	10 - 4D160 - 46	131	●	●
27.6	2390	244	28800	2940	1.07	33.3	1980	202	29200	2980	1.07	10 - 4B140 - 53	127	●	●
			45800	4670	1.60				44300	4520	1.60	10 - 4C140 - 53	129	●	●
			45800	4670	1.93				44300	4520	1.94	10 - 4C145 - 53	129	●	●
			45800	4670	2.15				44300	4520	2.15	10 - 4C160 - 53	129	●	●
			71400	7280	2.49				68400	6970	2.49	10 - 4D160 - 53	131	●	●
			71400	7280	2.99				68400	6970	3.01	10 - 4D165 - 53	131	●	●
24.4	2710	276	22300	2270	0.95	29.4	2250	229	29500	3010	0.95	10 - 4B140 - 60	127	–	–
			46700	4760	1.35				45300	4620	1.35	10 - 4C140 - 60	129	●	●
			46700	4760	1.60				45300	4620	1.60	10 - 4C145 - 60	129	●	●
			46700	4760	1.75				45300	4620	1.75	10 - 4C160 - 60	129	●	●
			46700	4760	1.90				45300	4620	1.90	10 - 4C165 - 60	129	●	●
			73400	7480	2.51				70400	7180	2.51	10 - 4D165 - 60	131	●	●
21.6	3060	312	47400	4830	1.15	26.0	2540	259	46200	4710	1.15	10 - 4C140 - 67	129	●	●
			47400	4830	1.27				46200	4710	1.47	10 - 4C145 - 67	129	●	●
			47400	4830	1.68				46200	4710	1.68	10 - 4C160 - 67	129	●	●
			75300	7680	1.72				72300	7370	1.72	10 - 4D160 - 67	131	●	●
			75300	7680	2.13				72300	7370	2.15	10 - 4D165 - 67	131	●	●
			75300	7680	2.48				72300	7370	2.60	10 - 4D170 - 67	131	●	●
			75300	7680	2.85				72300	7370	2.85	10 - 4D175 - 67	131	●	●
			75400	7690	2.85				72400	7380	3.44	10 - 4D180 - 67	131	△	●
19.7	3350	341	48100	4900	1.15	23.8	2770	282	46900	4780	1.15	10 - 4C140 - 74	129	●	●
			48100	4900	1.27				46900	4780	1.47	10 - 4C145 - 74	129	●	●
			48100	4900	1.54				46900	4780	1.54	10 - 4C160 - 74	129	●	●
			76800	7830	1.72				73800	7520	1.72	10 - 4D160 - 74	131	●	●
			76800	7830	2.13				73800	7520	2.15	10 - 4D165 - 74	131	●	●
			76800	7830	2.48				73800	7520	2.60	10 - 4D170 - 74	131	●	●
			76800	7830	2.60				73800	7520	2.60	10 - 4D175 - 74	131	●	●
			76800	7830	2.60				73800	7520	3.14	10 - 4D180 - 74	131	△	●
			99200	10100	2.94				98000	9990	2.94	10 - 4E175 - 74	133	●	●
			99200	10100	2.94				98000	9990	3.54	10 - 4E180 - 74	133	△	●

Selection Table for Gearmotors

7.5 kW	Frequency	Hz	50Hz	60Hz
	Motor poles	P	4	
	Motor speed n_1	r/min	1450	1750

IMPORTANT :
Please refer to page 54 for Gearmotor Selection Table notes.

Reduction ratio 80 ► 123

50Hz						60Hz						Model (refer to page 23)	Dimensional Drawing Page	Options Available Note 11	
Output Speed n_2	Output Torque T_{out}		Allowable Radial Load of Output Shaft Pro		SF_G	Output Speed n_2	Output Torque T_{out}		Allowable Radial Load of Output Shaft Pro		SF_G	Capacity - Symbol - Frame Size - Reduction Ratio		AF Motor Note 10	High-Efficiency Motor
r/min	N·m	kgf·m	N	kgf		r/min	N·m	kgf·m	N	kgf					
18.1	3640	371	48400	4930	1.05	21.9	3020	308	47300	4820	1.05	10 - 4C145 - 80	129	●	●
			48400	4930	1.31				47300	4820	1.31	10 - 4C160 - 80	129	●	●
			48400	4930	1.41				47300	4820	1.41	10 - 4C165 - 80	129	●	●
			78000	7950	1.79				75100	7660	2.01	10 - 4D165 - 80	131	●	●
			78000	7950	2.08				75100	7660	2.11	10 - 4D170 - 80	131	●	●
			78000	7950	2.39				75100	7660	2.39	10 - 4D175 - 80	131	●	●
			78100	7960	2.39				75100	7660	2.89	10 - 4D180 - 80	131	△	●
			98600	10100	2.60				99900	10200	2.60	10 - 4E175 - 80	133	●	●
			98600	10100	2.70				99900	10200	3.21	10 - 4E180 - 80	133	△	●
			98600	10100	2.70				99900	10200	3.26	10 - 4E185 - 80	133	△	●
16.6	3990	407	48900	4980	1.05	20.0	3300	336	48000	4890	1.05	10 - 4C145 - 88	129	●	●
			48900	4980	1.29				48000	4890	1.29	10 - 4C160 - 88	129	●	●
			79400	8090	1.31				76600	7810	1.31	10 - 4D160 - 88	131	●	●
			79400	8090	1.79				76600	7810	2.01	10 - 4D165 - 88	131	●	●
			79400	8090	2.08				76600	7810	2.11	10 - 4D170 - 88	131	●	●
			79400	8090	2.19				76600	7810	2.19	10 - 4D175 - 88	131	●	●
			79400	8090	2.19				76600	7810	2.64	10 - 4D180 - 88	131	△	●
			97900	9980	2.47				99300	10100	2.47	10 - 4E175 - 88	133	●	●
			97900	9980	2.47				99300	10100	2.98	10 - 4E180 - 88	133	△	●
14.3	4620	471	49100	5010	1.00	17.2	3830	390	48700	4960	1.00	10 - 4C145 - 102	129	●	●
			49100	5010	1.11				48700	4960	1.11	10 - 4C160 - 102	129	●	●
			81600	8320	1.27				78800	8030	1.40	10 - 4D160 - 102	131	●	●
			81600	8320	1.52				78800	8030	1.52	10 - 4D165 - 102	131	●	●
			81600	8320	1.80				78800	8030	1.89	10 - 4D170 - 102	131	●	●
			81600	8320	1.89				78800	8030	1.89	10 - 4D175 - 102	131	●	●
			81600	8320	1.89				78800	8030	2.28	10 - 4D180 - 102	131	△	●
			96700	9860	2.13				98300	10000	2.13	10 - 4E175 - 102	133	●	●
			96700	9860	2.13				98300	10000	2.57	10 - 4E180 - 102	133	△	●
			135000	13800	2.60				137000	14000	2.60	10 - 4F180 - 102	135	△	●
12.9	5100	520	42500	4330	1.01	15.6	4230	431	49000	4990	1.01	10 - 4C160 - 112	129	●	●
			82900	8450	1.07				80200	8180	1.29	10 - 4D160 - 112	131	●	●
			82900	8450	1.28				80200	8180	1.52	10 - 4D165 - 112	131	●	●
			82900	8450	1.49				80200	8180	1.60	10 - 4D170 - 112	131	●	●
			82900	8450	1.71				80200	8180	1.71	10 - 4D175 - 112	131	●	●
			83000	8460	1.71				80300	8190	2.06	10 - 4D180 - 112	131	△	●
			95700	9760	1.92				97500	9940	2.01	10 - 4E175 - 112	133	●	●
			95700	9760	2.27				97500	9940	2.51	10 - 4E180 - 112	133	△	●
			95700	9760	2.27				97500	9940	2.74	10 - 4E185 - 112	133	△	●
			134000	13700	2.47				136000	13900	2.51	10 - 4F180 - 112	135	△	●
11.8	5580	569	34000	3470	0.84	14.3	4620	471	49100	5010	0.92	10 - 4C145 - 123	129	—	—
			82200	8380	1.07				81600	8320	1.29	10 - 4D160 - 123	131	●	●
			82200	8380	1.28				81600	8320	1.52	10 - 4D165 - 123	131	●	●
			82200	8380	1.49				81600	8320	1.56	10 - 4D170 - 123	131	●	●
			82200	8380	1.56				81600	8320	1.56	10 - 4D175 - 123	131	●	●
			82200	8380	1.56				81600	8320	1.89	10 - 4D180 - 123	131	△	●
			94800	9660	1.92				96700	9860	2.01	10 - 4E175 - 123	133	●	●
			94800	9660	2.08				96700	9860	2.51	10 - 4E180 - 123	133	△	●
			134000	13700	2.47				135000	13800	2.51	10 - 4F180 - 123	135	△	●

Selection Table for Gearmotors

7.5 kW	Frequency	Hz	50Hz	60Hz
	Motor poles	P	4	
	Motor speed n_1	r/min	1450	1750

IMPORTANT :
Please refer to page 54 for Gearmotor Selection Table notes.

Reduction ratio 151 ► 207

50Hz						60Hz						Model (refer to page 23)	Dimensional Drawing Page	Options Available Note 11	
Output Speed n_2	Output Torque T_{out}		Allowable Radial Load of Output Shaft Pro		SF_G	Output Speed n_2	Output Torque T_{out}		Allowable Radial Load of Output Shaft Pro		SF_G	Capacity Symbol - Frame Size - Reduction Ratio		AF Motor Note 10	High-Efficiency Motor
r/min	N·m	kgf·m	N	kgf		r/min	N·m	kgf·m	N	kgf					
9.63	6850	698	72700	7410	0.86	11.6	5680	579	81600	8320	0.99	10 - 4D160 - 151	131	—	—
			72700	7410	1.04				81600	8320	1.05	10 - 4D165 - 151	131	●	●
			72700	7410	1.21				81600	8320	1.27	10 - 4D170 - 151	131	●	●
			72700	7410	1.27				81600	8320	1.27	10 - 4D175 - 151	131	●	●
			72700	7410	1.27				81600	8320	1.54	10 - 4D180 - 151	131	△	●
			92200	9400	1.51				94600	9640	1.51	10 - 4E175 - 151	133	●	●
			92200	9400	1.69				94600	9640	2.01	10 - 4E180 - 151	133	△	●
			92200	9400	1.69				94600	9640	2.04	10 - 4E185 - 151	133	△	●
			131000	13400	2.01				133000	13600	2.01	10 - 4F180 - 151	135	△	●
			131000	13400	2.48				133000	13600	2.51	10 - 4F185 - 151	135	△	●
			131000	13400	2.63				133000	13600	2.79	10 - 4F190 - 151	135	△	●
			131000	13400	2.63				133000	13600	3.17	10 - 4F195 - 151	135	△	●
8.12	8130	829	59100	6020	0.88	9.80	6740	687	73700	7510	1.00	10 - 4D165 - 179	131	●	●
			59100	6020	1.02				73700	7510	1.07	10 - 4D170 - 179	131	●	●
			59100	6020	1.07				73700	7510	1.07	10 - 4D175 - 179	131	●	●
			59100	6020	1.07				73700	7510	1.29	10 - 4D180 - 179	131	△	●
			89700	9140	1.32				92500	9430	1.43	10 - 4E175 - 179	133	●	●
			89700	9140	1.43				92500	9430	1.60	10 - 4E180 - 179	133	△	●
			89700	9140	1.43				92500	9430	1.72	10 - 4E185 - 179	133	△	●
			129000	13100	1.60				132000	13500	1.60	10 - 4F180 - 179	135	△	●
			129000	13100	2.01				132000	13500	2.01	10 - 4F185 - 179	135	△	●
			129000	13100	2.21				132000	13500	2.43	10 - 4F190 - 179	135	△	●
			129000	13100	2.21				132000	13500	2.67	10 - 4F195 - 179	135	△	●
7.02	9400	958	37500	3820	0.88	8.47	7790	794	63200	6440	0.93	10 - 4D170 - 207	131	—	—
			37500	3820	0.93				63200	6440	0.93	10 - 4D175 - 207	131	—	—
			37500	3820	0.93				63200	6440	1.12	10 - 4D180 - 207	131	●	●
			87100	8880	1.11				90300	9200	1.11	10 - 4E175 - 207	133	●	●
			87100	8880	1.23				90300	9200	1.30	10 - 4E180 - 207	133	△	●
			87100	8880	1.23				90300	9200	1.49	10 - 4E185 - 207	133	△	●
			127000	12900	1.30				130000	13300	1.30	10 - 4F180 - 207	135	△	●
			127000	12900	1.60				130000	13300	1.60	10 - 4F185 - 207	135	△	●
			127000	12900	1.91				130000	13300	2.04	10 - 4F190 - 207	135	△	●
			127000	12900	1.91				130000	13300	2.31	10 - 4F195 - 207	135	△	●
5.84	11300	1150	83300	8490	0.93	7.04	9380	956	87200	8890	0.95	10 - 4E175 - 249	133	—	—
			83300	8490	1.02				87200	8890	1.17	10 - 4E180 - 249	133	△	●
			83300	8490	1.02				87200	8890	1.24	10 - 4E185 - 249	133	△	●
			124000	12600	1.17				127000	12900	1.17	10 - 4F180 - 249	135	△	●
			124000	12600	1.31				127000	12900	1.31	10 - 4F185 - 249	135	△	●
			124000	12600	1.59				127000	12900	1.80	10 - 4F190 - 249	135	△	●
			124000	12600	1.59				127000	12900	1.92	10 - 4F195 - 249	135	△	●
7.02	9400	958	37500	3820	0.88	8.47	7790	794	63200	6440	0.93	10 - 4D170 - 207	131	—	—
			37500	3820	0.93				63200	6440	0.93	10 - 4D175 - 207	131	—	—
			37500	3820	0.93				63200	6440	1.12	10 - 4D180 - 207	131	●	●
			87100	8880	1.11				90300	9200	1.11	10 - 4E175 - 207	133	●	●
			87100	8880	1.23				90300	9200	1.30	10 - 4E180 - 207	133	△	●
			87100	8880	1.23				90300	9200	1.49	10 - 4E185 - 207	133	△	●
			127000	12900	1.30				130000	13300	1.30	10 - 4F180 - 207	135	△	●
			127000	12900	1.60				130000	13300	1.60	10 - 4F185 - 207	135	△	●
			127000	12900	1.91				130000	13300	2.04	10 - 4F190 - 207	135	△	●
			127000	12900	1.91				130000	13300	2.31	10 - 4F195 - 207	135	△	●

Selection Table for Gearmotors

7.5 kW

Frequency	Hz	50Hz	60Hz
Motor poles	P	4	
Motor speed n_1	r/min	1450	1750

IMPORTANT :
Please refer to page 54 for Gearmotor Selection Table notes.

Reduction ratio 249 ► 501

50Hz						60Hz						Model (refer to page 23)	Dimensional Drawing Page	Options Available Note 11	
Output Speed n_2	Output Torque T_{out}		Allowable Radial Load of Output Shaft Pro		SF_G	Output Speed n_2	Output Torque T_{out}		Allowable Radial Load of Output Shaft Pro		SF_G	Capacity Symbol - Frame Size - Reduction Ratio		AF Motor Note 10	High-Efficiency Motor
r/min	N·m	kgf·m	N	kgf		r/min	N·m	kgf·m	N	kgf					
5.84	11300	1150	83300	8490	0.93	7.04	9380	956	87200	8890	0.95	10 - 4E175 - 249	133	—	—
			83300	8490	1.02				87200	8890	1.17	10 - 4E180 - 249	133	△	●
			83300	8490	1.02				87200	8890	1.24	10 - 4E185 - 249	133	△	●
			124000	12600	1.17				127000	12900	1.17	10 - 4F180 - 249	135	△	●
			124000	12600	1.31				127000	12900	1.31	10 - 4F185 - 249	135	△	●
			124000	12600	1.59				127000	12900	1.80	10 - 4F190 - 249	135	△	●
			124000	12600	1.59				127000	12900	1.92	10 - 4F195 - 249	135	△	●
4.76	13900	1420	53000	5400	0.84	5.75	11500	1170	83000	8460	0.95	10 - 4E180 - 305	133	—	—
			53000	5400	0.84				83000	8460	1.01	10 - 4E185 - 305	133	●	●
			119000	12100	0.95				124000	12600	0.95	10 - 4F180 - 305	135	—	—
			119000	12100	1.15				124000	12600	1.15	10 - 4F185 - 305	135	△	●
			119000	12100	1.30				124000	12600	1.57	10 - 4F190 - 305	135	△	●
3.98	15700	1600	116000	11800	1.06	4.81	13000	1330	121000	12300	1.28	10 - 4F18DB - 364	135	△	●
			116000	11800	1.11				121000	12300	1.33	10 - 4F19DB - 364	135	△	●
3.42	18300	1870	112000	11400	0.89	4.13	15200	1550	117000	11900	1.08	10 - 4F18DB - 424	135	●	●
			112000	11400	0.95				117000	11900	1.15	10 - 4F19DB - 424	135	●	●
2.90	21600	2200	79200	8070	0.80	3.50	17900	1820	113000	11500	0.97	10 - 4F19DB - 501	135	—	—

11 kW

Frequency	Hz	50Hz	60Hz
Motor poles	P	4	
Motor speed n_1	r/min	1450	1750

IMPORTANT :
Please refer to page 54 for Gearmotor Selection Table notes.

Reduction ratio 11 ►14

50Hz						60Hz						Model (refer to page 23)	Dimensional Drawing Page	Options Available Note 9	
Output Speed n_2	Output Torque T_{out}		Allowable Radial Load of Output Shaft Pro		SF_G	Output Speed n_2	Output Torque T_{out}		Allowable Radial Load of Output Shaft Pro		SF_G	Capacity Symbol - Frame Size - Reduction Ratio		AF Motor Note	High-Efficiency Motor
r/min	N·m	kgf·m	N	kgf		r/min	N·m	kgf·m	N	kgf					
138	701	71.5	14400	1470	1.00	167	581	59.2	14100	1440	1.00	15 - 4A125 - 11	125	—	—
			14400	1470	1.66				14100	1440	1.84	15 - 4A145 - 11	125	●	●
			21600	2200	2.00				20800	2120	2.00	15 - 4B145 - 11	127	●	●
			21600	2200	2.30				20800	2120	2.30	15 - 4B160 - 11	127	●	●
			21600	2200	2.64				20800	2120	2.64	15 - 4B165 - 11	127	●	●
			31200	3180	2.73				29700	3030	2.73	15 - 4C165 - 11	129	●	●
113	855	87.2	14700	1500	1.00	137	708	72.2	14400	1470	1.00	15 - 4A125 - 13	125	—	—
			14700	1500	1.50				14400	1470	1.51	15 - 4A140 - 13	125	●	●
			22400	2280	1.73				21600	2200	1.73	15 - 4B140 - 13	127	●	●
			22400	2280	2.00				21600	2200	2.00	15 - 4B145 - 13	127	●	●
			22400	2280	2.30				21600	2200	2.30	15 - 4B160 - 13	127	●	●
			22400	2280	2.64				21600	2200	2.64	15 - 4B165 - 13	127	●	●
			32600	3320	2.73				31200	3180	2.73	15 - 4C165 - 13	129	●	●
104	935	95.3	14800	1510	1.00	125	775	79.0	14600	1490	1.00	15 - 4A125 - 14	125	—	—
			14800	1510	1.38				14600	1490	1.38	15 - 4A140 - 14	125	●	●
			22800	2320	1.73				22000	2240	1.73	15 - 4B140 - 14	127	●	●
			22800	2320	2.00				22000	2240	2.00	15 - 4B145 - 14	127	●	●
			22800	2320	2.30				22000	2240	2.30	15 - 4B160 - 14	127	●	●
			22800	2320	2.54				22000	2240	2.64	15 - 4B165 - 14	127	●	●
			33300	3390	2.73				31900	3250	2.73	15 - 4C165 - 14	129	●	●

Selection Table for Gearmotors

11 kW	Frequency	Hz	50Hz	60Hz
	Motor poles	P	4	
	Motor speed n_1	r/min	1450	1750

IMPORTANT :
Please refer to page 54 for Gearmotor Selection Table notes.

Reduction ratio 16 ►39

50Hz						60Hz						Model (refer to page 23)	Dimensional Drawing Page	Options Available Note 9	
Output Speed n_2	Output Torque T_{out}		Allowable Radial Load of Output Shaft Pro		SF_G	Output Speed n_2	Output Torque T_{out}		Allowable Radial Load of Output Shaft Pro		SF_G	Capacity - Frame Size - Reduction Ratio Symbol		AF Motor Note	High-Efficiency Motor
r/min	N·m	kgf·m	N	kgf		r/min	N·m	kgf·m	N	kgf					
90.6	1070	109	14900	1520	1.00	109	886	90.3	14700	1500	1.00	15 - 4A125 - 16	125	—	—
			14900	1520	1.21				14700	1500	1.21	15 - 4A140 - 16	125	●	●
			23300	2380	1.73				22600	2300	1.73	15 - 4B140 - 16	127	●	●
			23300	2380	2.00				22600	2300	2.00	15 - 4B145 - 16	127	●	●
			23300	2380	2.25				22600	2300	2.30	15 - 4B160 - 16	127	●	●
			23300	2380	2.25				22600	2300	2.40	15 - 4B165 - 16	127	●	●
			34300	3500	2.30				32900	3350	2.30	15 - 4C160 - 16	129	●	●
			34300	3500	2.73				32900	3350	2.73	15 - 4C165 - 16	129	●	●
82.9	1170	119	14900	1520	1.00	100	969	98.8	14800	1510	1.00	15 - 4A125 - 18	125	—	—
			14900	1520	1.10				14800	1510	1.10	15 - 4A140 - 18	125	●	●
			23700	2420	1.73				23000	2340	1.73	15 - 4B140 - 18	127	●	●
			23700	2420	2.00				23000	2340	2.00	15 - 4B145 - 18	127	●	●
			23700	2420	2.15				23000	2340	2.20	15 - 4B160 - 18	127	●	●
			35000	3570	2.30				33600	3430	2.30	15 - 4C160 - 18	129	●	●
			35000	3570	2.73				33600	3430	2.73	15 - 4C165 - 18	129	●	●
69.0	1400	143	9600	979	0.92	83.3	1160	118	14900	1520	0.92	15 - 4A140 - 21	125	—	—
			24300	2480	1.18				23700	2420	1.18	15 - 4B140 - 21	127	●	●
			24300	2480	1.37				23700	2420	1.37	15 - 4B145 - 21	127	●	●
			24300	2480	1.83				23700	2420	1.83	15 - 4B160 - 21	127	●	●
			36300	3700	2.30				35000	3570	2.30	15 - 4C160 - 21	129	●	●
			36300	3700	2.73				35000	3570	2.73	15 - 4C165 - 21	129	●	●
64.7	1500	153	1290	131	0.86	78.1	1240	126	14900	1520	0.86	15 - 4A140 - 22	125	—	—
			24400	2490	1.18				23800	2430	1.18	15 - 4B140 - 22	127	●	●
			24400	2490	1.37				23800	2430	1.37	15 - 4B145 - 22	127	●	●
			24400	2490	1.72				23800	2430	1.72	15 - 4B160 - 22	127	●	●
			36800	3750	1.85				35400	3610	1.85	15 - 4C160 - 22	129	●	●
			36800	3750	2.19				35400	3610	2.19	15 - 4C165 - 22	129	●	●
59.2	1640	167	24700	2520	1.18	71.4	1360	139	24200	2470	1.18	15 - 4B140 - 25	127	●	●
			24700	2520	1.37				24200	2470	1.37	15 - 4B145 - 25	127	●	●
			24700	2520	1.57				24200	2470	1.57	15 - 4B160 - 25	127	●	●
			37400	3810	1.85				36100	3680	1.85	15 - 4C160 - 25	129	●	●
			37400	3810	2.19				36100	3680	2.19	15 - 4C165 - 25	129	●	●
			37400	3810	2.94				36100	3680	3.14	15 - 4C175 - 25	129	●	●
51.8	1870	191	25000	2550	1.18	62.5	1550	158	24600	2510	1.18	15 - 4B140 - 28	127	●	●
			25000	2550	1.37				24600	2510	1.37	15 - 4B145 - 28	127	●	●
			38300	3900	1.79				37100	3780	1.79	15 - 4C160 - 28	129	●	●
			38300	3900	2.19				37100	3780	2.19	15 - 4C165 - 28	129	●	●
			38300	3900	2.67				37100	3780	2.75	15 - 4C170 - 28	129	●	●
41.2	2350	240	25300	2580	1.09	49.7	1950	199	25000	2550	1.09	15 - 4B140 - 35	127	●	●
			39700	4050	1.18				38600	3930	1.18	15 - 4C140 - 35	129	●	●
			39700	4050	1.37				38600	3930	1.37	15 - 4C145 - 35	129	●	●
			39700	4050	1.79				38600	3930	1.79	15 - 4C160 - 35	129	●	●
			62600	6380	2.19				60000	6120	2.19	15 - 4D165 - 35	131	●	●
			62600	6380	2.51				60000	6120	2.51	15 - 4D170 - 35	131	●	●
			62600	6380	2.74				60000	6120	2.74	15 - 4D175 - 35	131	●	●
37.7	2570	262	25400	2590	1.00	45.5	2130	217	25200	2570	1.00	15 - 4B140 - 39	127	●	●
			40300	4110	1.18				39200	4000	1.18	15 - 4C140 - 39	129	●	●
			40300	4110	1.37				39200	4000	1.37	15 - 4C145 - 39	129	●	●
			40300	4110	1.79				39200	4000	1.79	15 - 4C160 - 39	129	●	●
			40300	4110	2.00				39200	4000	2.00	15 - 4C165 - 39	129	●	●
			63800	6500	2.19				61300	6250	2.19	15 - 4D165 - 39	131	●	●
			63800	6500	2.51				61300	6250	2.51	15 - 4D170 - 39	131	●	●
			63800	6500	2.74				61300	6250	2.74	15 - 4D175 - 39	131	●	●

Selection Table for Gearmotors

11 kW	Frequency	Hz	50Hz	60Hz
	Motor poles	P	4	
	Motor speed n_1	r/min	1450	1750

IMPORTANT :
Please refer to page 54 for Gearmotor Selection Table notes.

Reduction ratio 46 ►74

50Hz						60Hz						Model (refer to page 23)	Dimensional Drawing Page	Options Available Note 9	
Output Speed n_2	Output Torque T_{out}		Allowable Radial Load of Output Shaft Pro		SF_G	Output Speed n_2	Output Torque T_{out}		Allowable Radial Load of Output Shaft Pro		SF_G	Capacity Symbol - Frame Size - Reduction Ratio		AF Motor Note	High-Efficiency Motor
r/min	N·m	kgf·m	N	kgf		r/min	N·m	kgf·m	N	kgf					
31.9	3040	310	10500	1070	0.85	38.5	2520	257	25400	2590	0.85	15 - 4B140 - 46	127	—	—
			41100	4190	1.18				40200	4100	1.18	15 - 4C140 - 46	129	●	●
			41100	4190	1.37				40200	4100	1.37	15 - 4C145 - 46	129	●	●
			41100	4190	1.69				40200	4100	1.69	15 - 4C160 - 46	129	●	●
			66000	6730	1.79				63500	6470	1.79	15 - 4D160 - 46	131	●	●
			66000	6730	2.05				63500	6470	2.05	15 - 4D165 - 46	131	●	●
			66000	6730	2.48				63500	6470	2.48	15 - 4D170 - 46	131	●	●
			66000	6730	2.74				63500	6470	2.74	15 - 4D175 - 46	131	●	●
			66000	6730	2.87				63500	6470	3.38	15 - 4D180 - 46	131	△	●
27.6	3510	358	41600	4240	1.09	33.3	2910	297	40900	4170	1.09	15 - 4C140 - 53	129	●	●
			41600	4240	1.32				40900	4170	1.33	15 - 4C145 - 53	129	●	●
			41600	4240	1.47				40900	4170	1.47	15 - 4C160 - 53	129	●	●
			67900	6920	1.70				65500	6680	1.70	15 - 4D160 - 53	131	●	●
			67900	6920	2.04				65500	6680	2.05	15 - 4D165 - 53	131	●	●
			67900	6920	2.32				65500	6680	2.32	15 - 4D170 - 53	131	●	●
			67900	6920	2.49				65500	6680	2.49	15 - 4D175 - 53	131	●	●
			67900	6920	2.49				65500	6680	2.95	15 - 4D180 - 53	131	△	●
			91200	9300	2.74				87400	8910	2.74	15 - 4E175 - 53	133	●	●
			91200	9300	2.80				87400	8910	2.95	15 - 4E180 - 53	133	△	●
			91200	9300	2.80				87400	8910	3.38	15 - 4E185 - 53	133	△	●
			137000	14000	2.95				138000	14100	2.95	15 - 4F180 - 53	135	△	●
24.4	3970	405	42000	4280	1.09	29.4	3290	335	41400	4220	1.09	15 - 4C145 - 60	129	●	●
			42000	4280	1.19				41400	4220	1.19	15 - 4C160 - 60	129	●	●
			42000	4280	1.29				41400	4220	1.29	15 - 4C165 - 60	129	●	●
			69400	7070	1.71				67100	6840	1.71	15 - 4D165 - 60	131	●	●
			69400	7070	1.79				67100	6840	1.79	15 - 4D170 - 60	131	●	●
			69400	7070	2.19				67100	6840	2.19	15 - 4D175 - 60	131	●	●
			69400	7070	2.19				67100	6840	2.65	15 - 4D180 - 60	131	△	●
			93800	9560	2.47				90000	9170	2.78	15 - 4E180 - 60	133	△	●
			93800	9560	2.47				90000	9170	2.99	15 - 4E185 - 60	133	△	●
			136000	13900	2.78				137000	14000	2.78	15 - 4F180 - 60	135	△	●
21.6	4490	458	42100	4290	1.15	26.0	3720	379	41700	4250	1.15	15 - 4C160 - 67	129	●	●
			70700	7210	1.45				68500	6980	1.46	15 - 4D165 - 67	131	●	●
			70700	7210	1.69				68500	6980	1.77	15 - 4D170 - 67	131	●	●
			70700	7210	1.94				68500	6980	1.94	15 - 4D175 - 67	131	●	●
			70800	7220	1.94				68600	6990	2.34	15 - 4D180 - 67	131	△	●
			96100	9800	2.15				92400	9420	2.19	15 - 4E175 - 67	133	●	●
			96200	9810	2.19				92400	9420	2.64	15 - 4E180 - 67	133	△	●
			135000	13800	2.73				137000	14000	2.73	15 - 4F180 - 67	135	△	●
19.7	4910	501	42200	4300	0.86	23.8	4070	415	42000	4280	1.00	15 - 4C145 - 74	129	●	●
			42200	4300	1.05				42000	4280	1.05	15 - 4C160 - 74	129	●	●
			71800	7320	1.17				69700	7100	1.17	15 - 4D160 - 74	131	●	●
			71800	7320	1.45				69700	7100	1.46	15 - 4D165 - 74	131	●	●
			71800	7320	1.69				69700	7100	1.77	15 - 4D170 - 74	131	●	●
			71800	7320	1.78				69700	7100	1.78	15 - 4D175 - 74	131	●	●
			71800	7320	1.78				69700	7100	2.14	15 - 4D180 - 74	131	△	●
			96100	9800	2.00				94200	9600	2.00	15 - 4E175 - 74	133	●	●
			96100	9800	2.00				94200	9600	2.42	15 - 4E180 - 74	133	△	●
			135000	13800	2.73				136000	13900	2.73	15 - 4F180 - 74	135	△	●

11 kW	Frequency	Hz	50Hz	60Hz
	Motor poles	P	4	
	Motor speed n_1	r/min	1450	1750

IMPORTANT :
Please refer to page 54 for Gearmotor Selection Table notes.

Reduction ratio 53 ►80

50Hz						60Hz						Model (refer to page 23)	Dimensional Drawing Page	Options Available Note 9	
Output Speed n_2	Output Torque T_{out}		Allowable Radial Load of Output Shaft Pro		SF_G	Output Speed n_2	Output Torque T_{out}		Allowable Radial Load of Output Shaft Pro		SF_G	Capacity Symbol - Frame Size - Reduction Ratio		AF Motor Note	High-Efficiency Motor
r/min	N·m	kgf·m	N	kgf		r/min	N·m	kgf·m	N	kgf					
27.6	3510	358	41600	4240	1.09	33.3	2910	297	40900	4170	1.09	15 - 4C140 - 53	129	●	●
			41600	4240	1.32				40900	4170	1.33	15 - 4C145 - 53	129	●	●
			41600	4240	1.47				40900	4170	1.47	15 - 4C160 - 53	129	●	●
			67900	6920	1.70				65500	6680	1.70	15 - 4D160 - 53	131	●	●
			67900	6920	2.04				65500	6680	2.05	15 - 4D165 - 53	131	●	●
			67900	6920	2.32				65500	6680	2.32	15 - 4D170 - 53	131	●	●
			67900	6920	2.49				65500	6680	2.49	15 - 4D175 - 53	131	●	●
			67900	6920	2.49				65500	6680	2.95	15 - 4D180 - 53	131	△	●
			91300	9310	2.74				87400	8910	2.74	15 - 4E175 - 53	133	●	●
			91200	9300	2.80				87400	8910	2.95	15 - 4E180 - 53	133	△	●
			91200	9300	2.80				87400	8910	3.38	15 - 4E185 - 53	133	△	●
			137000	14000	2.95				138000	14100	2.95	15 - 4F180 - 53	135	△	●
24.4	3970	405	42000	4280	1.09	29.4	3290	335	41400	4220	1.09	15 - 4C145 - 60	129	●	●
			42000	4280	1.19				41400	4220	1.19	15 - 4C160 - 60	129	●	●
			42000	4280	1.29				41400	4220	1.29	15 - 4C165 - 60	129	●	●
			69400	7070	1.71				67100	6840	1.71	15 - 4D165 - 60	131	●	●
			69400	7070	1.79				67100	6840	1.79	15 - 4D170 - 60	131	●	●
			69400	7070	2.19				67100	6840	2.19	15 - 4D175 - 60	131	●	●
			69400	7070	2.19				67100	6840	2.65	15 - 4D180 - 60	131	△	●
			93800	9560	2.47				90000	9170	2.78	15 - 4E180 - 60	133	△	●
			93800	9560	2.47				90000	9170	2.99	15 - 4E185 - 60	133	△	●
			136000	13900	2.78				137000	14000	2.78	15 - 4F180 - 60	135	△	●
21.6	4490	458	42100	4290	1.15	26.0	3720	379	41700	4250	1.15	15 - 4C160 - 67	129	●	●
			70700	7210	1.45				68500	6980	1.46	15 - 4D165 - 67	131	●	●
			70700	7210	1.69				68500	6980	1.77	15 - 4D170 - 67	131	●	●
			70700	7210	1.94				68500	6980	1.94	15 - 4D175 - 67	131	●	●
			70800	7220	1.94				68600	6990	2.34	15 - 4D180 - 67	131	△	●
			96100	9800	2.15				92400	9420	2.19	15 - 4E175 - 67	133	●	●
			96200	9810	2.19				92400	9420	2.64	15 - 4E180 - 67	133	△	●
			135000	13800	2.73				137000	14000	2.73	15 - 4F180 - 67	135	△	●
19.7	4910	501	42200	4300	0.86	23.8	4070	415	42000	4280	1.00	15 - 4C145 - 74	129	●	●
			42200	4300	1.05				42000	4280	1.05	15 - 4C160 - 74	129	●	●
			71800	7320	1.17				69700	7100	1.17	15 - 4D160 - 74	131	●	●
			71800	7320	1.45				69700	7100	1.46	15 - 4D165 - 74	131	●	●
			71800	7320	1.69				69700	7100	1.77	15 - 4D170 - 74	131	●	●
			71800	7320	1.78				69700	7100	1.78	15 - 4D175 - 74	131	●	●
			71800	7320	1.78				69700	7100	2.14	15 - 4D180 - 74	131	△	●
			96100	9800	2.00				94200	9600	2.00	15 - 4E175 - 74	133	●	●
			96100	9800	2.00				94200	9600	2.42	15 - 4E180 - 74	133	△	●
			135000	13800	2.73				136000	13900	2.73	15 - 4F180 - 74	135	△	●
18.1	5340	544	38500	3920	0.96	21.9	4430	452	42100	4290	0.96	15 - 4C165 - 80	129	–	–
			72600	7400	1.22				70600	7200	1.37	15 - 4D165 - 80	131	●	●
			72600	7400	1.42				70600	7200	1.44	15 - 4D170 - 80	131	●	●
			72600	7400	1.63				70600	7200	1.63	15 - 4D175 - 80	131	●	●
			72700	7410	1.63				70700	7210	1.97	15 - 4D180 - 80	131	△	●
			95200	9700	1.77				95900	9780	1.77	15 - 4E175 - 80	133	●	●
			95200	9700	1.84				95900	9780	2.19	15 - 4E180 - 80	133	△	●
			95200	9700	1.84				95900	9780	2.22	15 - 4E185 - 80	133	△	●
			134000	13700	2.19				136000	13900	2.19	15 - 4F180 - 80	135	△	●
			134000	13700	2.74				136000	13900	2.74	15 - 4F185 - 80	135	△	●

Selection Table for Gearmotors

11 kW	Frequency	Hz	50Hz	60Hz
	Motor poles	P	4	
	Motor speed n_1	r/min	1450	1750

IMPORTANT :
Please refer to page 54 for Gearmotor Selection Table notes.

Reduction ratio 88 ►151

50Hz						60Hz						Model (refer to page 23)	Dimensional Drawing Page	Options Available Note 9	
Output Speed n_2	Output Torque T_{out}		Allowable Radial Load of Output Shaft Pro		SF_G	Output Speed n_2	Output Torque T_{out}		Allowable Radial Load of Output Shaft Pro		SF_G	Capacity Symbol - Frame Size - Reduction Ratio		AF Motor Note	High-Efficiency Motor
r/min	N·m	kgf·m	N	kgf		r/min	N·m	kgf·m	N	kgf					
16.6	5840	595	27600	2810	0.88	20.0	4840	493	42200	4300	0.88	15 - 4C160 - 88	129	–	–
			73600	7500	1.22				71700	7310	1.37	15 - 4D165 - 88	131	●	●
			73600	7500	1.42				71700	7310	1.44	15 - 4D170 - 88	131	●	●
			73600	7500	1.49				71700	7310	1.49	15 - 4D175 - 88	131	●	●
			73600	7500	1.49				71700	7310	1.80	15 - 4D180 - 88	131	●	●
			94200	9600	1.68				96200	9810	1.68	15 - 4E175 - 88	133	●	●
			94200	9600	1.68				96200	9810	2.03	15 - 4E180 - 88	133	●	●
			94200	9600	1.68				96200	9810	2.03	15 - 4E185 - 88	133	●	●
			94200	9600	1.68				96200	9810	2.03	15 - 4E190 - 88	133	△	●
			94200	9600	1.68				96200	9810	2.03	15 - 4E195 - 88	133	△	●
			133000	13600	2.19				135000	13800	2.19	15 - 4F180 - 88	135	●	●
			133000	13600	2.74				135000	13800	2.74	15 - 4F185 - 88	135	●	●
14.3	6780	691	73300	7470	1.04	17.2	5620	573	73200	7460	1.04	15 - 4D165 - 102	131	●	●
			73300	7470	1.23				73200	7460	1.29	15 - 4D170 - 102	131	●	●
			73300	7470	1.29				73200	7460	1.29	15 - 4D175 - 102	131	●	●
			73300	7470	1.29				73200	7460	1.55	15 - 4D180 - 102	131	●	●
			92400	9420	1.45				94700	9650	1.45	15 - 4E175 - 102	133	●	●
			92400	9420	1.45				94700	9650	1.75	15 - 4E180 - 102	133	●	●
			132000	13500	1.77				134000	13700	1.77	15 - 4F180 - 102	135	●	●
			132000	13500	2.19				134000	13700	2.19	15 - 4F185 - 102	135	●	●
			132000	13500	2.65				134000	13700	2.79	15 - 4F190 - 102	135	△	●
			132000	13500	2.65				134000	13700	3.20	15 - 4F195 - 102	135	△	●
12.9	7480	762	66600	6790	0.87	15.6	6200	632	73900	7530	1.04	15 - 4D165 - 112	131	●	●
			66600	6790	1.02				73900	7530	1.09	15 - 4D170 - 112	131	●	●
			66600	6790	1.17				73900	7530	1.17	15 - 4D175 - 112	131	●	●
			66600	6790	1.17				74100	7550	1.41	15 - 4D180 - 112	131	●	●
			91000	9280	1.31				93500	9530	1.37	15 - 4E175 - 112	133	●	●
			91000	9280	1.55				93500	9530	1.71	15 - 4E180 - 112	133	●	●
			91000	9280	1.55				93500	9530	1.87	15 - 4E185 - 112	133	●	●
			130000	13300	1.68				133000	13600	1.71	15 - 4F180 - 112	135	●	●
			130000	13300	2.05				133000	13600	2.05	15 - 4F185 - 112	135	●	●
			130000	13300	2.21				133000	13600	2.21	15 - 4F190 - 112	135	△	●
			130000	13300	2.41				133000	13600	2.74	15 - 4F195 - 112	135	△	●
11.8	8180	834	58400	5950	0.87	14.3	6780	691	73300	7470	1.04	15 - 4D165 - 123	131	●	●
			58400	5950	1.02				73300	7470	1.07	15 - 4D170 - 123	131	●	●
			58400	5950	1.07				73300	7470	1.07	15 - 4D175 - 123	131	●	●
			58400	5950	1.07				73300	7470	1.29	15 - 4D180 - 123	131	●	●
			89600	9130	1.31				92400	9420	1.37	15 - 4E175 - 123	133	●	●
			89600	9130	1.42				92400	9420	1.71	15 - 4E180 - 123	133	●	●
			129000	13100	1.68				132000	13500	1.71	15 - 4F180 - 123	135	●	●
			129000	13100	2.05				132000	13500	2.05	15 - 4F185 - 123	135	●	●
			129000	13100	2.20				132000	13500	2.21	15 - 4F190 - 123	135	△	●
			129000	13100	2.20				132000	13500	2.65	15 - 4F195 - 123	135	△	●
9.63	10100	1030	14900	1520	0.87	11.6	8330	849	56400	5750	0.87	15 - 4D175 - 151	131	–	–
			14900	1520	0.87				56400	5750	1.05	15 - 4D180 - 151	131	●	●
			85800	8750	1.03				89300	9100	1.03	15 - 4E175 - 151	133	●	●
			85800	8750	1.15				89300	9100	1.37	15 - 4E180 - 151	133	●	●
			85800	8750	1.15				89300	9100	1.39	15 - 4E185 - 151	133	●	●
			126000	12800	1.37				129000	13100	1.37	15 - 4F180 - 151	135	●	●
			126000	12800	1.69				129000	13100	1.71	15 - 4F185 - 151	135	●	●
			126000	12800	1.79				129000	13100	1.90	15 - 4F190 - 151	135	△	●
			126000	12800	1.79				129000	13100	2.16	15 - 4F195 - 151	135	△	●

Selection Table for Gearmotors

11 kW

Frequency	Hz	50Hz	60Hz
Motor poles	P	4	
Motor speed n_1	r/min	1450	1750

IMPORTANT :
Please refer to page 54 for Gearmotor Selection Table notes.

Reduction ratio 179 ►305

50Hz						60Hz						Model (refer to page 23)	Dimensional Drawing Page	Options Available Note 9	
Output Speed n_2	Output Torque T_{out}		Allowable Radial Load of Output Shaft Pro		SF_G	Output Speed n_2	Output Torque T_{out}		Allowable Radial Load of Output Shaft Pro		SF_G	Capacity Symbol - Frame Size - Reduction Ratio		AF Motor Note	High-Efficiency Motor
r/min	N·m	kgf·m	N	kgf		r/min	N·m	kgf·m	N	kgf					
8.12	11900	1210	78800	8030	0.90	9.80	9880	1010	86200	8790	0.97	15 - 4E175 - 179	133	—	—
			78800	8030	0.97				86200	8790	1.09	15 - 4E180 - 179	133	●	●
			78800	8030	0.97				86200	8790	1.17	15 - 4E185 - 179	133	●	●
			123000	12500	1.09				126000	12800	1.09	15 - 4F180 - 179	135	●	●
			123000	12500	1.37				126000	12800	1.37	15 - 4F185 - 179	135	●	●
			123000	12500	1.51				126000	12800	1.65	15 - 4F190 - 179	135	●	●
			123000	12500	1.51				126000	12800	1.82	15 - 4F195 - 179	135	●	●
7.02	13800	1410	54300	5540	0.84	8.47	11400	1160	83100	8470	0.89	15 - 4E180 - 207	133	—	—
			54300	5540	0.84				83100	8470	1.01	15 - 4E185 - 207	133	●	●
			120000	12200	0.89				124000	12600	0.89	15 - 4F180 - 207	135	—	—
			120000	12200	1.09				124000	12600	1.09	15 - 4F185 - 207	135	●	●
			120000	12200	1.30				124000	12600	1.39	15 - 4F190 - 207	135	●	●
			120000	12200	1.30				124000	12600	1.57	15 - 4F195 - 207	135	●	●
5.84	16600	1690	115000	11700	0.89	7.04	13800	1410	120000	12200	0.89	15 - 4F185 - 249	135	—	—
			115000	11700	1.08				120000	12200	1.23	15 - 4F190 - 249	135	●	●
			115000	11700	1.08				120000	12200	1.31	15 - 4F195 - 249	135	●	●
4.76	20300	2070	108000	11000	0.89	5.75	16900	1720	114000	11600	1.07	15 - 4F190 - 305	135	●	●

15 kW

Frequency	Hz	50Hz	60Hz
Motor poles	P	4	
Motor speed n_1	r/min	1450	1750

IMPORTANT :
Please refer to page 54 for Gearmotor Selection Table notes.

Reduction ratio 11 ► 16

50Hz						60Hz						Model (refer to page 23)	Dimensional Drawing Page	Options Available Note 11	
Output Speed n_2	Output Torque T_{out}		Allowable Radial Load of Output Shaft Pro		SF_G	Output Speed n_2	Output Torque T_{out}		Allowable Radial Load of Output Shaft Pro		SF_G	Capacity Symbol - Frame Size - Reduction Ratio		AF Motor Note 10	High-Efficiency Motor
r/min	N·m	kgf·m	N	kgf		r/min	N·m	kgf·m	N	kgf					
138	956	97.5	13100	1340	1.22	167	792	80.7	12900	1310	1.35	20 - 4A145 - 11	125	—	●
			20500	2090	1.47				19900	2030	1.47	20 - 4B145 - 11	127	—	●
			20500	2090	1.69				19900	2030	1.69	20 - 4B160 - 11	127	●	●
			20500	2090	1.93				19900	2030	1.93	20 - 4B165 - 11	127	●	●
			30200	3080	2.00				29000	2960	2.00	20 - 4C165 - 11	129	●	●
			30200	3080	2.77				29000	2960	2.77	20 - 4C170 - 11 ※	129	●	●
			45700	4660	2.77				43600	4440	2.77	20 - 4D170 - 11 ※	131	●	●
113	1170	119	13000	1330	1.10	137	966	98.5	13000	1330	1.11	20 - 4A140 - 13	125	—	●
			21100	2150	1.27				20500	2090	1.27	20 - 4B140 - 13	127	—	●
			21100	2150	1.47				20500	2090	1.47	20 - 4B145 - 13	127	—	●
			21100	2150	1.69				20500	2090	1.69	20 - 4B160 - 13	127	●	●
			21100	2150	1.93				20500	2090	1.93	20 - 4B165 - 13	127	●	●
			31500	3210	2.00				30200	3080	2.00	20 - 4C165 - 13	129	●	●
			31500	3210	2.77				30300	3090	2.77	20 - 4C170 - 13 ※	129	●	●
			48000	4890	2.77				45800	4670	2.77	20 - 4D170 - 13 ※	131	●	●
104	1280	130	13000	1330	1.01	125	1060	108	13100	1340	1.01	20 - 4A140 - 14	125	—	●
			21400	2180	1.27				20800	2120	1.27	20 - 4B140 - 14	127	—	●
			21400	2180	1.47				20800	2120	1.47	20 - 4B145 - 14	127	—	●
			21400	2180	1.69				20800	2120	1.69	20 - 4B160 - 14	127	●	●
			21400	2180	1.86				20800	2120	1.93	20 - 4B165 - 14	127	●	●
			32100	3270	2.00				30900	3150	2.00	20 - 4C165 - 14	129	●	●
			32100	3270	2.77				30900	3150	2.77	20 - 4C170 - 14 ※	129	●	●
			49100	5010	2.77				46900	4780	2.77	20 - 4D170 - 14 ※	131	●	●
90.6	1460	149	21600	2200	1.27	109	1210	123	21200	2160	1.27	20 - 4B140 - 16	127	—	●
			21600	2200	1.47				21200	2160	1.47	20 - 4B145 - 16	127	—	●
			21600	2200	1.65				21200	2160	1.76	20 - 4B165 - 16	127	●	●
			32800	3340	2.00				31700	3230	2.00	20 - 4C165 - 16	129	●	●
			32900	3350	2.77				31700	3230	2.77	20 - 4C170 - 16 ※	129	●	●
			32900	3350	2.95				31700	3230	3.00	20 - 4C175 - 16 ※	129	●	●
			50700	5170	2.77				48400	4930	2.77	20 - 4D170 - 16 ※	131	●	●

Selection Table for Gearmotors

15 kW	Frequency	Hz	50Hz	60Hz
	Motor poles	P	4	
	Motor speed n_1	r/min	1450	1750

IMPORTANT :
Please refer to page 54 for Gearmotor Selection Table notes.

Reduction ratio 18 ► 39

50Hz						60Hz						Model (refer to page 23)				Dimensional Drawing Page	Options Available Note 11	
Output Speed n_2	Output Torque T_{out}		Allowable Radial Load of Output Shaft Pro		SF_G	Output Speed n_2	Output Torque T_{out}		Allowable Radial Load of Output Shaft Pro		SF_G	Capacity Symbol	Frame Size	Reduction Ratio			AF Motor Note10	High-Efficiency Motor
r/min	N·m	kgf·m	N	kgf		r/min	N·m	kgf·m	N	kgf								
82.9	1590	162	21900	2230	1.27	100	1320	135	21500	2190	1.27	20	4B140	18		127	—	●
			21900	2230	1.47				21500	2190	1.47	20	4B145	18		127	—	●
			21900	2230	1.58				21500	2190	1.61	20	4B160	18		127	●	●
			33400	3400	1.69				32300	3290	1.69	20	4C160	18		129	●	●
			33400	3400	2.00				32300	3290	2.00	20	4C165	18		129	●	●
			33400	3400	2.76				32300	3290	2.77	20	4C170	18	※	129	●	●
			33400	3400	2.76				32300	3290	3.00	20	4C175	18	※	129	●	●
			51800	5280	2.77				49500	5050	2.77	20	4D170	18	※	131	●	●
69.0	1910	195	22100	2250	1.01	83.3	1580	161	21900	2230	1.01	20	4B145	21		127	—	●
			22100	2250	1.34				21900	2230	1.34	20	4B160	21		127	●	●
			34400	3510	1.69				33400	3400	1.69	20	4C160	21		129	●	●
			34400	3510	2.00				33400	3400	2.00	20	4C165	21		129	●	●
			34400	3510	2.26				33400	3400	2.26	20	4C170	21		129	●	●
			34400	3510	2.40				33400	3400	2.47	20	4C175	21		129	●	●
			53900	5490	2.77				51700	5270	2.77	20	4D180	21	※	131	△	●
64.7	2040	208	22100	2250	1.01	78.1	1690	172	21900	2230	1.01	20	4B145	22		127	—	●
			22100	2250	1.26				21900	2230	1.26	20	4B160	22		127	●	●
			34700	3540	1.35				33700	3440	1.35	20	4C160	22		129	●	●
			34700	3540	2.26				33700	3440	2.26	20	4C170	22		129	●	●
			34700	3540	2.32				33700	3440	2.47	20	4C175	22		129	●	●
			54700	5580	2.47				52400	5340	2.47	20	4D175	22		131	●	●
			54700	5580	2.77				52500	5350	2.77	20	4D180	22	※	131	△	●
59.2	2230	227	22200	2260	1.01	71.4	1850	189	22100	2250	1.01	20	4B145	25		127	—	●
			22200	2260	1.15				22100	2250	1.15	20	4B160	25		127	●	●
			35200	3590	1.35				34300	3500	1.35	20	4C160	25		129	●	●
			35200	3590	1.61				34300	3500	1.61	20	4C165	25		129	●	●
			35200	3590	2.15				34300	3500	2.30	20	4C175	25		129	●	●
			55800	5690	2.26				53500	5450	2.26	20	4D170	25		131	●	●
			55800	5690	2.47				53500	5450	2.47	20	4D175	25		131	●	●
			55800	5690	2.77				53500	5450	2.77	20	4D180	25	※	131	△	●
51.8	2550	260	22100	2250	1.01	62.5	2110	215	22200	2260	1.01	20	4B145	28		127	—	●
			35800	3650	1.31				35000	3570	1.31	20	4C160	28		129	●	●
			35800	3650	1.61				35000	3570	1.61	20	4C165	28		129	●	●
			35800	3650	1.96				35000	3570	2.02	20	4C170	28		129	●	●
			57300	5840	2.26				55100	5620	2.26	20	4D170	28		131	●	●
			57300	5840	2.47				55100	5620	2.47	20	4D175	28		131	●	●
			57300	5840	2.77				55100	5620	2.77	20	4D180	28	※	131	△	●
			76600	7810	2.77				73200	7460	2.77	20	4E180	28	※	133	△	●
41.2	3210	327	36500	3720	1.01	49.7	2660	271	35900	3660	1.01	20	4C145	35		129	—	●
			36500	3720	1.31				35900	3660	1.31	20	4C160	35		129	●	●
			36500	3720	1.60				35900	3660	1.60	20	4C165	35		129	●	●
			59800	6100	1.84				57700	5880	1.84	20	4D170	35		131	●	●
			59800	6100	2.01				57700	5880	2.01	20	4D175	35		131	●	●
			59900	6110	2.65				57800	5890	2.77	20	4D180	35	※	131	△	●
			80700	8230	2.77				77300	7880	2.77	20	4E180	35	※	133	△	●
37.7	3510	358	36800	3750	1.01	45.5	2910	297	36300	3700	1.01	20	4C145	39		129	—	●
			36800	3750	1.31				36300	3700	1.31	20	4C160	39		129	●	●
			36800	3750	1.47				36300	3700	1.47	20	4C165	39		129	●	●
			60900	6210	1.61				58800	5990	1.61	20	4D165	39		131	●	●
			60900	6210	1.84				58800	5990	1.84	20	4D170	39		131	●	●
			60900	6210	2.01				58800	5990	2.01	20	4D175	39		131	●	●
			60900	6210	2.44				58800	5990	2.77	20	4D180	39		131	△	●
			82200	8380	2.77				78900	8040	2.77	20	4E180	39		133	△	●
			82200	8380	2.80				78900	8040	3.00	20	4E185	39		133	△	●
			82200	8380	2.80				78900	8040	3.37	20	4E190	39		133	△	●
			82200	8380	2.80				78900	8040	3.38	20	4E195	39		133	△	●
			137000	14000	2.77				137000	14000	2.77	20	4F180	39		135	△	●

Selection Table for Gearmotors

15 kW	Frequency	Hz	50Hz	60Hz
	Motor poles	P	4	
	Motor speed n_1	r/min	1450	1750

IMPORTANT :
Please refer to page 54 for Gearmotor Selection Table notes.

Reduction ratio 46 ► 67

50Hz						60Hz						Model (refer to page 23)	Dimensional Drawing Page	Options Available Note 11	
Output Speed n_2	Output Torque T_{out}		Allowable Radial Load of Output Shaft Pro		SF_G	Output Speed n_2	Output Torque T_{out}		Allowable Radial Load of Output Shaft Pro		SF_G	Capacity Symbol - Frame Size - Reduction Ratio		AF Motor Note10	High-Efficiency Motor
r/min	N·m	kgf·m	N	kgf		r/min	N·m	kgf·m	N	kgf					
31.9	4140	422	37000	3770	1.01	38.5	3430	350	36700	3740	1.01	20 - 4C145 - 46	129	—	●
			37000	3770	1.24				36700	3740	1.24	20 - 4C160 - 46	129	●	●
			62500	6370	1.31				60600	6180	1.31	20 - 4D160 - 46	131	●	●
			62500	6370	1.51				60600	6180	1.51	20 - 4D165 - 46	131	●	●
			62500	6370	1.82				60600	6180	1.82	20 - 4D170 - 46	131	●	●
			62500	6370	2.01				60600	6180	2.01	20 - 4D175 - 46	131	●	●
			62500	6370	2.10				60600	6180	2.48	20 - 4D180 - 46	131	△	●
			85200	8690	2.37				81900	8350	2.77	20 - 4E180 - 46	133	△	●
			85200	8690	2.37				81900	8350	2.86	20 - 4E185 - 46	133	△	●
			136000	13900	2.77				137000	14000	2.77	20 - 4F180 - 46	135	△	●
27.6	4780	487	36900	3760	0.97	33.3	3960	404	36900	3760	0.97	20 - 4C145 - 53	129	—	—
			36900	3760	1.07				36900	3760	1.07	20 - 4C160 - 53	129	●	●
			63800	6500	1.25				62100	6330	1.25	20 - 4D160 - 53	131	●	●
			63800	6500	1.49				62100	6330	1.51	20 - 4D165 - 53	131	●	●
			63800	6500	1.70				62100	6330	1.70	20 - 4D170 - 53	131	●	●
			63800	6500	1.82				62100	6330	1.82	20 - 4D175 - 53	131	●	●
			63800	6500	1.82				62100	6330	2.16	20 - 4D180 - 53	131	△	●
			87600	8930	2.01				84400	8600	2.01	20 - 4E175 - 53	133	●	●
			87600	8930	2.06				84400	8600	2.16	20 - 4E180 - 53	133	△	●
			87600	8930	2.06				84400	8600	2.48	20 - 4E185 - 53	133	△	●
			135000	13800	2.16				136000	13900	2.16	20 - 4F180 - 53	135	△	●
			135000	13800	2.60				136000	13900	2.60	20 - 4F185 - 53	135	△	●
24.4	5420	552	64800	6610	1.25	29.4	4490	458	63300	6450	1.25	20 - 4D165 - 60	131	●	●
			64800	6610	1.31				63300	6450	1.31	20 - 4D170 - 60	131	●	●
			64800	6610	1.61				63300	6450	1.61	20 - 4D175 - 60	131	●	●
			64800	6610	1.61				63300	6450	1.94	20 - 4D180 - 60	131	●	●
			89600	9130	1.81				86500	8820	2.04	20 - 4E180 - 60	133	●	●
			89600	9130	1.81				86500	8820	2.19	20 - 4E185 - 60	133	●	●
			134000	13700	2.04				135000	13800	2.04	20 - 4F180 - 60	135	●	●
			134000	13700	2.55				135000	13800	2.60	20 - 4F185 - 60	135	●	●
21.6	6120	624	65500	6680	1.07	26.0	5070	517	64200	6540	1.07	20 - 4D165 - 67	131	●	●
			65500	6680	1.24				64200	6540	1.30	20 - 4D170 - 67	131	●	●
			65500	6680	1.42				64200	6540	1.42	20 - 4D175 - 67	131	●	●
			65700	6700	1.42				64300	6550	1.72	20 - 4D180 - 67	131	●	●
			91400	9320	1.57				88400	9010	1.61	20 - 4E175 - 67	133	●	●
			91500	9330	1.61				88500	9020	1.94	20 - 4E180 - 67	133	●	●
			133000	13600	2.00				134000	13700	2.00	20 - 4F180 - 67	135	●	●
			133000	13600	2.54				134000	13700	2.60	20 - 4F185 - 67	135	●	●
			133000	13600	2.73				134000	13700	2.73	20 - 4F190 - 67	135	△	●
			133000	13600	2.94				134000	13700	3.21	20 - 4F195 - 67	135	△	●

Selection Table for Gearmotors

15 kW	Frequency	Hz	50Hz	60Hz
	Motor poles	P	4	
	Motor speed n_1	r/min	1450	1750

IMPORTANT :
Please refer to page 54 for Gearmotor Selection Table notes.

Reduction ratio 74 ► 112

50Hz						60Hz						Model (refer to page 23)	Dimensional Drawing Page	Options Available Note 11	
Output Speed n_2	Output Torque T_{out}		Allowable Radial Load of Output Shaft Pro		SF_G	Output Speed n_2	Output Torque T_{out}		Allowable Radial Load of Output Shaft Pro		SF_G	Capacity - Frame Size - Reduction Ratio		AF Motor Note10	High-Efficiency Motor
r/min	N·m	kgf·m	N	kgf		r/min	N·m	kgf·m	N	kgf					
19.7	6690	682	66200	6750	1.07	23.8	5550	566	65000	6630	1.07	20 - 4D165 - 74	131	●	●
			66200	6750	1.24				65000	6630	1.30	20 - 4D170 - 74	131	●	●
			66200	6750	1.30				65000	6630	1.30	20 - 4D175 - 74	131	●	●
			66200	6750	1.30				65000	6630	1.57	20 - 4D180 - 74	131	●	●
			92500	9430	1.47				90000	9170	1.47	20 - 4E175 - 74	133	●	●
			92500	9430	1.47				90000	9170	1.77	20 - 4E180 - 74	133	●	●
			132000	13500	2.00				134000	13700	2.00	20 - 4F180 - 74	135	●	●
			132000	13500	2.54				134000	13700	2.60	20 - 4F185 - 74	135	●	●
			132000	13500	2.69				134000	13700	2.73	20 - 4F190 - 74	135	△	●
			132000	13500	2.69				134000	13700	3.21	20 - 4F195 - 74	135	△	●
18.1	7290	743	66400	6770	1.04	21.9	6040	616	65500	6680	1.05	20 - 4D170 - 80	131	●	●
			66400	6770	1.20				65500	6680	1.20	20 - 4D175 - 80	131	●	●
			66500	6780	1.20				65600	6690	1.44	20 - 4D180 - 80	131	●	●
			91400	9320	1.30				91200	9300	1.30	20 - 4E175 - 80	133	●	●
			91400	9320	1.35				91300	9310	1.61	20 - 4E180 - 80	133	●	●
			91400	9320	1.35				91300	9310	1.63	20 - 4E185 - 80	133	●	●
			131000	13400	1.61				133000	13600	1.61	20 - 4F180 - 80	135	●	●
			131000	13400	2.01				133000	13600	2.01	20 - 4F185 - 80	135	●	●
			131000	13400	2.35				133000	13600	2.35	20 - 4F190 - 80	135	△	●
			131000	13400	2.47				133000	13600	2.70	20 - 4F195 - 80	135	△	●
16.6	7970	812	61100	6230	0.89	20.0	6600	673	66100	6740	1.01	20 - 4D165 - 88	131	●	●
			61100	6230	1.04				66100	6740	1.05	20 - 4D170 - 88	131	●	●
			61100	6230	1.09				66100	6740	1.09	20 - 4D175 - 88	131	●	●
			61100	6230	1.09				66100	6740	1.32	20 - 4D180 - 88	131	●	●
			90000	9170	1.23				92600	9440	1.23	20 - 4E175 - 88	133	●	●
			90000	9170	1.23				92600	9440	1.49	20 - 4E180 - 88	133	●	●
			130000	13300	1.61				132000	13500	1.61	20 - 4F180 - 88	135	●	●
			130000	13300	2.01				132000	13500	2.01	20 - 4F185 - 88	135	●	●
			130000	13300	2.26				132000	13500	2.35	20 - 4F190 - 88	135	△	●
			130000	13300	2.26				132000	13500	2.70	20 - 4F195 - 88	135	△	●
14.3	9250	943	41000	4180	0.94	17.2	7660	781	64700	6600	0.94	20 - 4D175 - 102	131	—	—
			41000	4180	0.94				64700	6600	1.14	20 - 4D180 - 102	131	●	●
			87400	8910	1.06				90600	9240	1.06	20 - 4E175 - 102	133	●	●
			87400	8910	1.06				90600	9240	1.28	20 - 4E180 - 102	133	●	●
			127000	12900	1.30				130000	13300	1.30	20 - 4F180 - 102	135	●	●
			127000	12900	1.61				130000	13300	1.61	20 - 4F185 - 102	135	●	●
			127000	12900	1.95				130000	13300	2.05	20 - 4F190 - 102	135	●	●
			127000	12900	1.95				130000	13300	2.35	20 - 4F195 - 102	135	●	●
12.9	10200	1040	-	-	0.86	15.6	8450	861	54700	5580	1.03	20 - 4D180 - 112	131	●	●
			85500	8720	0.96				89000	9070	1.01	20 - 4E175 - 112	133	●	●
			85500	8720	1.14				89000	9070	1.25	20 - 4E180 - 112	133	●	●
			85500	8720	1.14				89000	9070	1.37	20 - 4E185 - 112	133	●	●
			126000	12800	1.23				129000	13100	1.25	20 - 4F180 - 112	135	●	●
			126000	12800	1.51				129000	13100	1.51	20 - 4F185 - 112	135	●	●
			126000	12800	1.62				129000	13100	1.62	20 - 4F190 - 112	135	●	●
			126000	12800	1.76				129000	13100	2.01	20 - 4F195 - 112	135	●	●

Selection Table for Gearmotors

15 kW

Frequency	Hz	50Hz	60Hz
Motor poles	P	4	
Motor speed n_1	r/min	1450	1750

IMPORTANT :
Please refer to page 54 for Gearmotor Selection Table notes.

Reduction ratio 123 ► 207

50Hz						60Hz						Model (refer to page 23)				Dimensional Drawing Page	Options Available Note 11	
Output Speed n_2	Output Torque T_{out}		Allowable Radial Load of Output Shaft Pro		SF_G	Output Speed n_2	Output Torque T_{out}		Allowable Radial Load of Output Shaft Pro		SF_G	Capacity Symbol	Frame Size	Reduction Ratio			AF Motor Note10	High-Efficiency Motor
r/min	N·m	kgf·m	N	kgf		r/min	N·m	kgf·m	N	kgf								
11.8	11200	1140	83600	8520	0.96	14.3	9250	943	87400	8910	1.01	20	4E175	123		133	●	●
			83600	8520	1.04				87400	8910	1.25	20	4E180	123		133	●	●
			124000	12600	1.23				127000	12900	1.25	20	4F180	123		135	●	●
			124000	12600	1.51				127000	12900	1.51	20	4F185	123		135	●	●
			124000	12600	1.61				127000	12900	1.62	20	4F190	123		135	●	●
			124000	12600	1.61				127000	12900	1.95	20	4F195	123		135	●	●
9.63	13700	1400	55800	5690	0.85	11.6	11400	1160	83200	8480	1.01	20	4E180	151		133	●	●
			55800	5690	0.85				83200	8480	1.02	20	4E185	151		133	●	●
			120000	12200	1.01				124000	12600	1.01	20	4F180	151		135	●	●
			120000	12200	1.24				124000	12600	1.25	20	4F185	151		135	●	●
			120000	12200	1.31				124000	12600	1.39	20	4F190	151		135	●	●
			120000	12200	1.31				124000	12600	1.58	20	4F195	151		135	●	●
8.12	16300	1660	115000	11700	1.01	9.80	13500	1380	120000	12200	1.01	20	4F185	179		135	●	●
			115000	11700	1.11				120000	12200	1.21	20	4F190	179		135	●	●
			115000	11700	1.11				120000	12200	1.34	20	4F195	179		135	●	●
7.02	18800	1920	111000	11300	0.96	8.47	15600	1590	117000	11900	1.02	20	4F190	207		135	●	●
			111000	11300	0.96				117000	11900	1.15	20	4F195	207		135	●	●

18.5 kW

Frequency	Hz	50Hz	60Hz
Motor poles	P	4	
Motor speed n_1	r/min	1450	1750

IMPORTANT :
Please refer to page 54 for Gearmotor Selection Table notes.

Reduction ratio 11 ► 18

50Hz						60Hz						Model (refer to page 23)				Dimensional Drawing Page	Options Available Note 11	
Output Speed n_2	Output Torque T_{out}		Allowable Radial Load of Output Shaft Pro		SF_G	Output Speed n_2	Output Torque T_{out}		Allowable Radial Load of Output Shaft Pro		SF_G	Capacity Symbol	Frame Size	Reduction Ratio			AF Motor Note10	High-Efficiency Motor
r/min	N·m	kgf·m	N	kgf		r/min	N·m	kgf·m	N	kgf								
138	1180	120	19600	2000	1.37	167	977	100	19100	1950	1.37	25	4B160	11		127	●	●
			19600	2000	1.57				19100	1950	1.57	25	4B165	11		127	●	●
			29400	3000	1.62				28300	2880	1.62	25	4C165	11		129	●	●
			29400	3000	2.24				28300	2880	2.24	25	4C170	11	※	129	●	●
			29400	3000	2.43				28300	2880	2.43	25	4C175	11	※	129	●	●
			45000	4590	2.24				43000	4380	2.24	25	4D170	11	※	131	●	●
			45000	4590	2.43				43000	4380	2.43	25	4D175	11	※	131	●	●
			45000	4590	2.89				43000	4380	2.89	25	4D180	11	※	131	△	●
113	1440	147	19900	2030	1.37	137	1190	121	19500	1990	1.37	25	4B160	13		127	●	●
			19900	2030	1.57				19500	1990	1.57	25	4B165	13		127	●	●
			30400	3100	1.62				29400	3000	1.62	25	4C165	13		129	●	●
			30500	3110	2.24				29400	3000	2.24	25	4C170	13	※	129	●	●
			30500	3110	2.43				29400	3000	2.43	25	4C175	13	※	129	●	●
			47200	4810	2.24				45100	4600	2.24	25	4D170	13	※	131	●	●
			47200	4810	2.43				45100	4600	2.43	25	4D175	13	※	131	●	●
			47200	4810	2.89				45100	4600	2.89	25	4D180	13	※	131	△	●
104	1570	160	20100	2050	1.37	125	1300	133	19800	2020	1.37	25	4B160	14		127	●	●
			20100	2050	1.51				19800	2020	1.57	25	4B165	14		127	●	●
			30900	3150	1.62				29900	3050	1.62	25	4C165	14		129	●	●
			30900	3150	2.24				29900	3050	2.24	25	4C170	14	※	129	●	●
			30900	3150	2.43				29900	3050	2.43	25	4C175	14	※	129	●	●
			48100	4900	2.24				46100	4700	2.24	25	4D170	14	※	131	●	●
			48100	4900	2.43				46100	4700	2.43	25	4D175	14	※	131	●	●
			48100	4900	2.89				46100	4700	2.89	25	4D180	14	※	131	△	●
90.6	1800	183	20200	2060	1.34	109	1490	152	20000	2040	1.43	25	4B165	16		127	●	●
			31600	3220	1.62				30600	3120	1.62	25	4C165	16		129	●	●
			31600	3220	2.24				30700	3130	2.24	25	4C170	16	※	129	●	●
			31600	3220	2.39				30700	3130	2.43	25	4C175	16	※	129	●	●
			49600	5060	2.24				47500	4840	2.24	25	4D170	16	※	131	●	●
			49600	5060	2.43				47500	4840	2.43	25	4D175	16	※	131	●	●
			49600	5060	2.89				47500	4840	2.89	25	4D180	16	※	131	△	●
82.9	1970	201	20300	2070	1.28	100	1630	166	20100	2050	1.31	25	4B160	18		127	●	●
			32000	3260	1.37				31100	3170	1.37	25	4C160	18		129	●	●
			32000	3260	1.62				31100	3170	1.62	25	4C165	18		129	●	●
			32000	3260	2.24				31100	3170	2.24	25	4C170	18	※	129	●	●
			32000	3260	2.24				31100	3170	2.43	25	4C175	18	※	129	●	●
			50600	5160	2.24				48500	4940	2.24	25	4D170	18	※	131	●	●
			50600	5160	2.43				48500	4940	2.43	25	4D175	18	※	131	●	●
			50600	5160	2.89				48500	4940	2.89	25	4D180	18	※	131	△	●

Selection Table for Gearmotors

18.5 kW	Frequency	Hz	50Hz	60Hz
	Motor poles	P	4	
	Motor speed n_1	r/min	1450	1750

IMPORTANT :
Please refer to page 54 for Gearmotor Selection Table notes.

Reduction ratio 21 ► 35

50Hz						60Hz						Model (refer to page 23)	Dimensional Drawing Page	Options Available Note 11	
Output Speed n_2	Output Torque T_{out}		Allowable Radial Load of Output Shaft Pro		SF_G	Output Speed n_2	Output Torque T_{out}		Allowable Radial Load of Output Shaft Pro		SF_G	Capacity Symbol - Frame Size - Reduction Ratio		AF Motor Note10	High-Efficiency Motor
r/min	N·m	kgf·m	N	kgf		r/min	N·m	kgf·m	N	kgf					
69.0	2360	241	20200	2060	1.09	83.3	1950	199	20300	2070	1.09	25 - 4B160 - 21	127	●	●
			32800	3340	1.37				32000	3260	1.37	25 - 4C160 - 21	129	●	●
			32800	3340	1.62				32000	3260	1.62	25 - 4C165 - 21	129	●	●
			32800	3340	1.83				32000	3260	1.83	25 - 4C170 - 21	129	●	●
			32800	3340	1.95				32000	3260	2.00	25 - 4C175 - 21	129	●	●
			52500	5350	2.00				50500	5150	2.00	25 - 4D175 - 21	131	●	●
			52500	5350	2.24				50500	5150	2.24	25 - 4D180 - 21 ※	131	△	●
			52500	5350	2.43				50500	5150	2.43	25 - 4D185 - 21 ※	131	△	●
			70200	7160	2.74				67100	6840	2.74	25 - 4E190 - 21 ※	133	△	●
			70200	7160	2.97				67100	6840	2.97	25 - 4E195 - 21 ※	133	△	●
64.7	2520	257	20100	2050	1.02	78.1	2090	213	20200	2060	1.02	25 - 4B160 - 22	127	●	●
			32900	3350	1.10				32200	3280	1.10	25 - 4C160 - 22	129	●	●
			32900	3350	1.30				32200	3280	1.30	25 - 4C165 - 22	129	●	●
			32900	3350	1.83				32200	3280	1.83	25 - 4C170 - 22	129	●	●
			53200	5420	2.00				51200	5220	2.00	25 - 4D175 - 22	131	●	●
			53200	5420	2.24				51200	5220	2.24	25 - 4D180 - 22 ※	131	△	●
			53200	5420	2.43				51200	5220	2.43	25 - 4D185 - 22 ※	131	△	●
			71200	7260	2.74				68200	6950	2.74	25 - 4E190 - 22 ※	133	△	●
			71200	7260	2.97				68200	6950	2.97	25 - 4E195 - 22 ※	133	△	●
59.2	2750	280	20000	2040	0.93	71.4	2280	232	20300	2070	0.93	25 - 4B160 - 25	127	—	—
			33300	3390	1.10				32600	3320	1.10	25 - 4C160 - 25	129	●	●
			33300	3390	1.30				32600	3320	1.30	25 - 4C165 - 25	129	●	●
			33300	3390	1.75				32600	3320	1.87	25 - 4C175 - 25	129	●	●
			54100	5510	1.83				52200	5320	1.83	25 - 4D170 - 25	131	●	●
			54100	5510	2.00				52200	5320	2.00	25 - 4D175 - 25	131	●	●
			54100	5510	2.24				52200	5320	2.24	25 - 4D180 - 25 ※	131	△	●
			54100	5510	2.43				52200	5320	2.43	25 - 4D185 - 25 ※	131	△	●
			72700	7410	2.43				69600	7090	2.43	25 - 4E185 - 25 ※	133	△	●
			72700	7410	2.74				69600	7090	2.74	25 - 4E190 - 25 ※	133	△	●
			72700	7410	2.97				69600	7090	2.97	25 - 4E195 - 25 ※	133	△	●
51.8	3150	321	33600	3430	1.06	62.5	2610	266	33100	3370	1.06	25 - 4C160 - 28	129	●	●
			33600	3430	1.30				33100	3370	1.30	25 - 4C165 - 28	129	●	●
			33600	3430	1.59				33100	3370	1.63	25 - 4C170 - 28	129	●	●
			55400	5650	1.83				53600	5460	1.83	25 - 4D170 - 28	131	●	●
			55400	5650	2.00				53600	5460	2.00	25 - 4D175 - 28	131	●	●
			55400	5650	2.24				53600	5460	2.24	25 - 4D180 - 28 ※	131	△	●
			55400	5650	2.43				53600	5460	2.43	25 - 4D185 - 28 ※	131	△	●
			74900	7640	2.24				71800	7320	2.24	25 - 4E180 - 28 ※	133	△	●
			74900	7640	2.43				71800	7320	2.43	25 - 4E185 - 28 ※	133	△	●
			74900	7640	2.74				71800	7320	2.74	25 - 4E190 - 28 ※	133	△	●
			74900	7640	2.97				71800	7320	2.97	25 - 4E195 - 28 ※	133	△	●
			131000	13400	2.97				124000	12600	2.97	25 - 4F195 - 28 ※	135	△	●
41.2	3950	403	33700	3440	1.06	49.7	3280	334	33600	3430	1.06	25 - 4C160 - 35	129	●	●
			33700	3440	1.30				33600	3430	1.30	25 - 4C165 - 35	129	●	●
			57500	5860	1.49				55800	5690	1.49	25 - 4D170 - 35	131	●	●
			57500	5860	1.63				55800	5690	1.63	25 - 4D175 - 35	131	●	●
			57500	5860	2.15				55800	5690	2.24	25 - 4D180 - 35 ※	131	●	●
			78500	8000	2.24				75500	7700	2.24	25 - 4E180 - 35 ※	133	●	●
			78500	8000	2.43				75500	7700	2.43	25 - 4E185 - 35 ※	133	●	●
			78500	8000	2.49				75500	7700	2.74	25 - 4E190 - 35 ※	133	△	●
			78500	8000	2.49				75500	7700	2.97	25 - 4E195 - 35 ※	133	△	●
			136000	13900	2.43				132000	13500	2.43	25 - 4F185 - 35 ※	135	●	●
			136000	13900	2.74				132000	13500	2.74	25 - 4F190 - 35 ※	135	●	●
			136000	13900	2.97				132000	13500	2.97	25 - 4F195 - 35 ※	135	●	●

Selection Table for Gearmotors

18.5 kW	Frequency	Hz	50Hz	60Hz
	Motor poles	P	4	
	Motor speed n_1	r/min	1450	1750

IMPORTANT :
Please refer to page 54 for Gearmotor Selection Table notes.

Reduction ratio 39 ► 60

50Hz						60Hz						Model (refer to page 23)	Dimensional Drawing Page	Options Available Note 11	
Output Speed n_2	Output Torque T_{out}		Allowable Radial Load of Output Shaft Pro		SF_G	Output Speed n_2	Output Torque T_{out}		Allowable Radial Load of Output Shaft Pro		SF_G	Capacity Symbol - Frame Size - Reduction Ratio		AF Motor Note10	High-Efficiency Motor
r/min	N·m	kgf·m	N	kgf		r/min	N·m	kgf·m	N	kgf					
37.7	4330	441	33700	3440	1.06	45.5	3580	365	33800	3450	1.06	25 - 4C160 - 39	129	●	●
			33700	3440	1.19				33800	3450	1.19	25 - 4C165 - 39	129	●	●
			58300	5940	1.30				56700	5780	1.30	25 - 4D165 - 39	131	●	●
			58300	5940	1.49				56700	5780	1.49	25 - 4D170 - 39	131	●	●
			58300	5940	1.63				56700	5780	1.63	25 - 4D175 - 39	131	●	●
			58300	5940	1.98				56700	5780	2.24	25 - 4D180 - 39	131	●	●
			79900	8140	2.24				77000	7850	2.24	25 - 4E180 - 39	133	●	●
			79900	8140	2.27				77000	7850	2.43	25 - 4E185 - 39	133	●	●
			79900	8140	2.27				77000	7850	2.74	25 - 4E190 - 39	133	△	●
			136000	13900	2.24				135000	13800	2.24	25 - 4F180 - 39	135	●	●
			136000	13900	2.43				135000	13800	2.43	25 - 4F185 - 39	135	●	●
			136000	13900	2.74				135000	13800	2.74	25 - 4F190 - 39	135	△	●
			136000	13900	2.97				135000	13800	2.97	25 - 4F195 - 39	135	△	●
31.9	5110	521	33400	3400	1.01	38.5	4240	432	33800	3450	1.01	25 - 4C160 - 46	129	●	●
			59500	6070	1.22				58100	5920	1.22	25 - 4D165 - 46	131	●	●
			59500	6070	1.48				58100	5920	1.48	25 - 4D170 - 46	131	●	●
			59500	6070	1.63				58100	5920	1.63	25 - 4D175 - 46	131	●	●
			59500	6070	1.71				58100	5920	2.01	25 - 4D180 - 46	131	●	●
			82400	8400	1.92				79600	8110	2.24	25 - 4E180 - 46	133	●	●
			82400	8400	1.92				79600	8110	2.32	25 - 4E185 - 46	133	●	●
			134000	13700	2.24				136000	13900	2.24	25 - 4F180 - 46	135	●	●
			134000	13700	2.43				136000	13900	2.43	25 - 4F185 - 46	135	●	●
			134000	13700	2.74				136000	13900	2.74	25 - 4F190 - 46	135	△	●
			134000	13700	2.97				136000	13900	2.97	25 - 4F195 - 46	135	△	●
27.6	5900	601	26100	2660	0.87	33.3	4890	498	33500	3410	0.87	25 - 4C160 - 53	129	—	—
			60300	6150	1.01				59200	6030	1.01	25 - 4D160 - 53	131	●	●
			60300	6150	1.21				59200	6030	1.22	25 - 4D165 - 53	131	●	●
			60300	6150	1.38				59200	6030	1.38	25 - 4D170 - 53	131	●	●
			60300	6150	1.48				59200	6030	1.48	25 - 4D175 - 53	131	●	●
			60300	6150	1.48				59200	6030	1.75	25 - 4D180 - 53	131	●	●
			84400	8600	1.63				81700	8330	1.63	25 - 4E175 - 53	133	●	●
			84400	8600	1.67				81700	8330	1.75	25 - 4E180 - 53	133	●	●
			84400	8600	1.67				81700	8330	2.01	25 - 4E185 - 53	133	●	●
			133000	13600	1.75				135000	13800	1.75	25 - 4F180 - 53	135	●	●
			133000	13600	2.11				135000	13800	2.11	25 - 4F185 - 53	135	●	●
			133000	13600	2.74				135000	13800	2.74	25 - 4F190 - 53	135	△	●
			133000	13600	2.97				135000	13800	2.97	25 - 4F195 - 53	135	△	●
24.4	6680	681	60800	6200	1.02	29.4	5540	565	60000	6120	1.02	25 - 4D165 - 60	131	●	●
			60800	6200	1.06				60000	6120	1.06	25 - 4D170 - 60	131	●	●
			60800	6200	1.30				60000	6120	1.30	25 - 4D175 - 60	131	●	●
			60800	6200	1.30				60000	6120	1.57	25 - 4D180 - 60	131	●	●
			86000	8770	1.47				83500	8510	1.65	25 - 4E180 - 60	133	●	●
			86000	8770	1.47				83500	8510	1.77	25 - 4E185 - 60	133	●	●
			132000	13500	1.65				134000	13700	1.65	25 - 4F180 - 60	135	●	●
			132000	13500	2.06				134000	13700	2.11	25 - 4F185 - 60	135	●	●
			132000	13500	2.69				134000	13700	2.74	25 - 4F190 - 60	135	△	●
			132000	13500	2.69				134000	13700	2.97	25 - 4F195 - 60	135	△	●

Selection Table for Gearmotors

18.5 kW	Frequency	Hz	50Hz	60Hz
	Motor poles	P	4	
	Motor speed n_1	r/min	1450	1750

IMPORTANT :
Please refer to page 54 for Gearmotor Selection Table notes.

Reduction ratio 67 ► 112

50Hz						60Hz						Model (refer to page 23)	Dimensional Drawing Page	Options Available Note 11	
Output Speed n_2	Output Torque T_{out}		Allowable Radial Load of Output Shaft Pro		SF_G	Output Speed n_2	Output Torque T_{out}		Allowable Radial Load of Output Shaft Pro		SF_G	Capacity Symbol - Frame Size - Reduction Ratio		AF Motor Note10	High-Efficiency Motor
r/min	N·m	kgf·m	N	kgf		r/min	N·m	kgf·m	N	kgf					
21.6	7550	770	61000	6220	1.01	26.0	6260	638	60500	6170	1.05	25 - 4D170 - 67	131	●	●
			61000	6220	1.16				60500	6170	1.16	25 - 4D175 - 67	131	●	●
			61100	6230	1.16				60600	6180	1.39	25 - 4D180 - 67	131	●	●
			87200	8890	1.28				85000	8660	1.30	25 - 4E175 - 67	133	●	●
			87400	8910	1.30				85100	8670	1.57	25 - 4E180 - 67	133	●	●
			130000	13300	1.62				132000	13500	1.62	25 - 4F180 - 67	135	●	●
			130000	13300	2.06				132000	13500	2.11	25 - 4F185 - 67	135	●	●
			130000	13300	2.22				132000	13500	2.22	25 - 4F190 - 67	135	△	●
			130000	13300	2.38				132000	13500	2.60	25 - 4F195 - 67	135	△	●
19.7	8260	842	57400	5850	0.87	23.8	6840	697	60900	6210	0.87	25 - 4D165 - 74	131	—	—
			57400	5850	1.01				60900	6210	1.05	25 - 4D170 - 74	131	●	●
			57400	5850	1.06				60900	6210	1.06	25 - 4D175 - 74	131	●	●
			57400	5850	1.06				60900	6210	1.27	25 - 4D180 - 74	131	●	●
			88300	9000	1.19				86200	8790	1.19	25 - 4E175 - 74	133	●	●
			88300	9000	1.19				86200	8790	1.44	25 - 4E180 - 74	133	●	●
			129000	13100	1.62				131000	13400	1.62	25 - 4F180 - 74	135	●	●
			129000	13100	2.06				131000	13400	2.11	25 - 4F185 - 74	135	●	●
			129000	13100	2.18				131000	13400	2.22	25 - 4F190 - 74	135	●	●
			129000	13100	2.18				131000	13400	2.60	25 - 4F195 - 74	135	●	●
18.1	8990	916	46100	4700	0.97	21.9	7450	759	61000	6220	0.97	25 - 4D175 - 80	131	—	—
			46100	4700	0.97				61100	6230	1.17	25 - 4D180 - 80	131	●	●
			88000	8970	1.05				87100	8880	1.05	25 - 4E175 - 80	133	●	●
			88000	8970	1.09				87200	8890	1.30	25 - 4E180 - 80	133	●	●
			88000	8970	1.09				87200	8890	1.32	25 - 4E185 - 80	133	●	●
			88000	8970	1.09				87200	8890	1.32	25 - 4E195 - 80	133	●	●
			128000	13000	1.30				130000	13300	1.30	25 - 4F180 - 80	135	●	●
			128000	13000	1.63				130000	13300	1.63	25 - 4F185 - 80	135	●	●
			128000	13000	1.90				130000	13300	1.90	25 - 4F190 - 80	135	●	●
			128000	13000	2.00				130000	13300	2.19	25 - 4F195 - 80	135	●	●
16.6	9830	1000	25300	2580	0.89	20.0	8140	830	58900	6000	1.07	25 - 4D180 - 88	131	●	●
			86300	8800	1.00				88200	8990	1.00	25 - 4E175 - 88	133	●	●
			86300	8800	1.00				88200	8990	1.21	25 - 4E180 - 88	133	●	●
			126000	12800	1.30				129000	13100	1.30	25 - 4F180 - 88	135	●	●
			126000	12800	1.63				129000	13100	1.63	25 - 4F185 - 88	135	●	●
			126000	12800	1.83				129000	13100	1.90	25 - 4F190 - 88	135	●	●
			126000	12800	1.83				129000	13100	2.19	25 - 4F195 - 88	135	●	●
14.3	11400	1160	83100	8470	0.86	17.2	9450	963	87000	8870	0.86	25 - 4E175 - 102	133	—	—
			83100	8470	0.86				87000	8870	1.04	25 - 4E180 - 102	133	●	●
			124000	12600	1.05				127000	12900	1.05	25 - 4F180 - 102	135	●	●
			124000	12600	1.30				127000	12900	1.30	25 - 4F185 - 102	135	●	●
			124000	12600	1.58				127000	12900	1.66	25 - 4F190 - 102	135	●	●
			124000	12600	1.58				127000	12900	1.91	25 - 4F195 - 102	135	●	●
12.9	12600	1280	71500	7290	0.92	15.6	10400	1060	85100	8670	1.02	25 - 4E180 - 112	133	●	●
			71500	7290	0.92				85100	8670	1.11	25 - 4E185 - 112	133	●	●
			122000	12400	1.00				125000	12700	1.02	25 - 4F180 - 112	135	●	●
			122000	12400	1.22				125000	12700	1.22	25 - 4F185 - 112	135	●	●
			122000	12400	1.31				125000	12700	1.31	25 - 4F190 - 112	135	●	●
			122000	12400	1.43				125000	12700	1.63	25 - 4F195 - 112	135	●	●

Selection Table for Gearmotors

18.5 kW

Frequency	Hz	50Hz	60Hz
Motor poles	P	4	
Motor speed n_1	r/min	1450	1750

IMPORTANT :
Please refer to page 54 for Gearmotor Selection Table notes.

Reduction ratio 123 ► 179

50Hz						60Hz						Model (refer to page 23)	Dimensional Drawing Page	Options Available Note 11	
Output Speed n_2	Output Torque T_{out}		Allowable Radial Load of Output Shaft Pro		SF_G	Output Speed n_2	Output Torque T_{out}		Allowable Radial Load of Output Shaft Pro		SF_G	Capacity Symbol - Frame Size - Reduction Ratio		AF Motor Note10	High-Efficiency Motor
r/min	N·m	kgf·m	N	kgf		r/min	N·m	kgf·m	N	kgf					
11.8	13800	1410	54900	5600	0.84	14.3	11400	1160	83100	8470	1.02	25 - 4E180 - 123	133	●	●
			54900	5600	0.84				83100	8470	1.02	25 - 4E185 - 123	133	●	●
			120000	12200	1.00				124000	12600	1.02	25 - 4F180 - 123	135	●	●
			120000	12200	1.22				124000	12600	1.22	25 - 4F185 - 123	135	●	●
			120000	12200	1.31				124000	12600	1.31	25 - 4F190 - 123	135	●	●
			120000	12200	1.31				124000	12600	1.58	25 - 4F195 - 123	135	●	●
9.63	16900	1720	114000	11600	0.82	11.6	14000	1430	119000	12100	0.82	25 - 4F180 - 151	135	—	—
			114000	11600	1.01				119000	12100	1.02	25 - 4F185 - 151	135	●	●
			114000	11600	1.06				119000	12100	1.13	25 - 4F190 - 151	135	●	●
			114000	11600	1.06				119000	12100	1.28	25 - 4F195 - 151	135	●	●
8.12	20100	2050	109000	11100	0.82	9.80	16600	1690	115000	11700	0.82	25 - 4F185 - 179	135	—	—
			109000	11100	0.90				115000	11700	0.98	25 - 4F190 - 179	135	—	—
			109000	11100	0.90				115000	11700	1.08	25 - 4F195 - 179	135	●	●

22 kW

Frequency	Hz	50Hz	60Hz
Motor poles	P	4	
Motor speed n_1	r/min	1450	1750

IMPORTANT :
Please refer to page 54 for Gearmotor Selection Table notes.

Reduction ratio 11 ► 16

50Hz						60Hz						Model (refer to page 23)	Dimensional Drawing Page	Options Available Note 11	
Output Speed n_2	Output Torque T_{out}		Allowable Radial Load of Output Shaft Pro		SF_G	Output Speed n_2	Output Torque T_{out}		Allowable Radial Load of Output Shaft Pro		SF_G	Capacity Symbol - Frame Size - Reduction Ratio		AF Motor Note 10	High-Efficiency Motor
r/min	N·m	kgf·m	N	kgf		r/min	N·m	kgf·m	N	kgf					
138	1400	143	18600	1900	1.15	167	1160	118	18300	1870	1.15	30 - 4B160 - 11	127	●	●
			18600	1900	1.32				18300	1870	1.32	30 - 4B165 - 11	127	●	●
			28500	2910	1.36				27600	2810	1.36	30 - 4C165 - 11	129	●	●
			28500	2910	1.89				27600	2810	1.89	30 - 4C170 - 11 ※	129	●	●
			28500	2910	2.05				27600	2810	2.05	30 - 4C175 - 11 ※	129	●	●
			44300	4520	1.89				42400	4320	1.89	30 - 4D170 - 11 ※	131	●	●
			44300	4520	2.05				42400	4320	2.05	30 - 4D175 - 11 ※	131	●	●
			44300	4520	2.43				42400	4320	2.43	30 - 4D180 - 11 ※	131	△	●
			44300	4520	2.73				42400	4320	2.73	30 - 4D185 - 11 ※	131	△	●
113	1710	174	18800	1920	1.15	137	1420	145	18600	1900	1.15	30 - 4B160 - 13	127	●	●
			18800	1920	1.32				18600	1900	1.32	30 - 4B165 - 13	127	●	●
			29400	3000	1.36				28500	2910	1.36	30 - 4C165 - 13	129	●	●
			29400	3000	1.89				28600	2920	1.89	30 - 4C170 - 13 ※	129	●	●
			29400	3000	2.05				28600	2920	2.05	30 - 4C175 - 13 ※	129	●	●
			46300	4720	1.89				44400	4530	1.89	30 - 4D170 - 13 ※	131	●	●
			46300	4720	2.05				44400	4530	2.05	30 - 4D175 - 13 ※	131	●	●
			46300	4720	2.43				44400	4530	2.43	30 - 4D180 - 13 ※	131	△	●
			46300	4720	2.73				44400	4530	2.73	30 - 4D185 - 13 ※	131	△	●
104	1870	191	18800	1920	1.15	125	1550	158	18700	1910	1.15	30 - 4B160 - 14	127	●	●
			18800	1920	1.27				18700	1910	1.32	30 - 4B165 - 14	127	●	●
			29800	3040	1.36				29000	2960	1.36	30 - 4C165 - 14	129	●	●
			29800	3040	1.89				29000	2960	1.89	30 - 4C170 - 14 ※	129	●	●
			29800	3040	2.05				29000	2960	2.05	30 - 4C175 - 14 ※	129	●	●
			47200	4810	1.89				45300	4620	1.89	30 - 4D170 - 14 ※	131	●	●
			47200	4810	2.05				45300	4620	2.05	30 - 4D175 - 14 ※	131	●	●
			47200	4810	2.43				45300	4620	2.43	30 - 4D180 - 14 ※	131	△	●
			47200	4810	2.73				45300	4620	2.73	30 - 4D185 - 14 ※	131	△	●
90.6	2140	218	18700	1910	1.13	109	1770	180	18800	1920	1.15	30 - 4B160 - 16	127	●	●
			18700	1910	1.13				18800	1920	1.20	30 - 4B165 - 16	127	●	●
			30300	3090	1.15				29600	3020	1.15	30 - 4C160 - 16	129	●	●
			30300	3090	1.36				29600	3020	1.36	30 - 4C165 - 16	129	●	●
			30300	3090	1.89				29600	3020	1.89	30 - 4C170 - 16 ※	129	●	●
			30300	3090	2.01				29600	3020	2.05	30 - 4C175 - 16 ※	129	●	●
			48500	4940	1.89				46700	4760	1.89	30 - 4D170 - 16 ※	131	●	●
			48500	4940	2.05				46700	4760	2.05	30 - 4D175 - 16 ※	131	●	●
			48500	4940	2.43				46700	4760	2.43	30 - 4D180 - 16 ※	131	△	●
			48500	4940	2.73				46700	4760	2.73	30 - 4D185 - 16 ※	131	△	●

Selection Table for Gearmotors

22 kW	Frequency	Hz	50Hz	60Hz
	Motor poles	P	4	
	Motor speed n_1	r/min	1450	1750

IMPORTANT :
Please refer to page 54 for Gearmotor Selection Table notes.

Reduction ratio 18 ► 35

50Hz						60Hz						Model (refer to page 23)	Dimensional Drawing Page	Options Available Note 11	
Output Speed n_2	Output Torque T_{out}		Allowable Radial Load of Output Shaft Pro		SF_G	Output Speed n_2	Output Torque T_{out}		Allowable Radial Load of Output Shaft Pro		SF_G	Capacity - Frame Size - Reduction Ratio		AF Motor Note 10	High-Efficiency Motor
r/min	N·m	kgf·m	N	kgf		r/min	N·m	kgf·m	N	kgf					
82.9	2340	239	18700	1910	1.07	100	1940	198	18800	1920	1.10	30 - 4B160 - 18	127	●	●
			30600	3120	1.15				30000	3060	1.15	30 - 4C160 - 18	129	●	●
			30600	3120	1.36				30000	3060	1.36	30 - 4C165 - 18	129	●	●
			30600	3120	1.88				30000	3060	1.89	30 - 4C170 - 18 ※	129	●	●
			30600	3120	1.88				30000	3060	2.05	30 - 4C175 - 18 ※	129	●	●
			49400	5040	1.89				47600	4850	1.89	30 - 4D170 - 18 ※	131	●	●
			49400	5040	2.05				47600	4850	2.05	30 - 4D175 - 18 ※	131	●	●
			49400	5040	2.43				47600	4850	2.43	30 - 4D180 - 18 ※	131	△	●
			49400	5040	2.73				47600	4850	2.73	30 - 4D185 - 18 ※	131	△	●
			66200	6750	2.73				63300	6450	2.73	30 - 4E185 - 18 ※	133	△	●
69.0	2810	286	31100	3170	1.15	83.3	2320	236	30600	3120	1.15	30 - 4C160 - 21	129	●	●
			31100	3170	1.36				30600	3120	1.36	30 - 4C165 - 21	129	●	●
			31100	3170	1.54				30600	3120	1.54	30 - 4C170 - 21	129	●	●
			31100	3170	1.64				30600	3120	1.68	30 - 4C175 - 21	129	●	●
			51100	5210	1.68				49300	5030	1.68	30 - 4D175 - 21	131	●	●
			51100	5210	1.89				49300	5030	1.89	30 - 4D180 - 21 ※	131	△	●
			51100	5210	2.05				49300	5030	2.05	30 - 4D185 - 21 ※	131	△	●
			68900	7020	2.30				66100	6740	2.30	30 - 4E190 - 21 ※	133	△	●
			68900	7020	2.50				66100	6740	2.50	30 - 4E195 - 21 ※	133	△	●
64.7	2990	305	31100	3170	0.92	78.1	2480	253	30700	3130	0.92	30 - 4C160 - 22	129	—	—
			31100	3170	1.10				30700	3130	1.10	30 - 4C165 - 22	129	●	●
			31100	3170	1.54				30700	3130	1.54	30 - 4C170 - 22	129	●	●
			31100	3170	1.59				30700	3130	1.68	30 - 4C175 - 22	129	●	●
			51600	5260	1.68				49900	5090	1.68	30 - 4D175 - 22	131	●	●
			51700	5270	1.89				50000	5100	1.89	30 - 4D180 - 22 ※	131	△	●
			51700	5270	2.05				50000	5100	2.05	30 - 4D185 - 22 ※	131	△	●
			69900	7130	2.30				67000	6830	2.30	30 - 4E190 - 22 ※	133	△	●
			69900	7130	2.50				67000	6830	2.50	30 - 4E195 - 22 ※	133	△	●
59.2	3270	333	31300	3190	1.10	71.4	2710	276	31000	3160	1.10	30 - 4C165 - 25	129	●	●
			31300	3190	1.47				31000	3160	1.57	30 - 4C175 - 25	129	●	●
			52500	5350	1.68				50800	5180	1.68	30 - 4D175 - 25	131	●	●
			52500	5350	1.89				50800	5180	1.89	30 - 4D180 - 25 ※	131	△	●
			52500	5350	2.05				50800	5180	2.05	30 - 4D185 - 25 ※	131	△	●
			71200	7260	2.05				68400	6970	2.05	30 - 4E185 - 25 ※	133	△	●
			71200	7260	2.30				68400	6970	2.30	30 - 4E190 - 25 ※	133	△	●
			71200	7260	2.50				68400	6970	2.50	30 - 4E195 - 25 ※	133	△	●
51.8	3740	381	31400	3200	1.10	62.5	3100	316	31300	3190	1.10	30 - 4C165 - 28	129	●	●
			31400	3200	1.34				31300	3190	1.37	30 - 4C170 - 28	129	●	●
			53600	5460	1.54				52000	5300	1.54	30 - 4D170 - 28	131	●	●
			53600	5460	1.68				52000	5300	1.68	30 - 4D175 - 28	131	●	●
			53600	5460	1.89				52000	5300	1.89	30 - 4D180 - 28 ※	131	△	●
			53600	5460	2.05				52000	5300	2.05	30 - 4D185 - 28 ※	131	△	●
			73200	7460	1.89				70400	7180	1.89	30 - 4E180 - 28 ※	133	△	●
			73200	7460	2.05				70400	7180	2.05	30 - 4E185 - 28 ※	133	△	●
			73200	7460	2.30				70400	7180	2.30	30 - 4E190 - 28 ※	133	△	●
			73200	7460	2.50				70400	7180	2.50	30 - 4E195 - 28 ※	133	△	●
			129000	13100	2.50				123000	12500	2.50	30 - 4F195 - 28 ※	135	△	●
41.2	4700	479	30900	3150	1.09	49.7	3900	398	31200	3180	1.09	30 - 4C165 - 35	129	●	●
			55100	5620	1.25				53800	5480	1.25	30 - 4D170 - 35	131	●	●
			55100	5620	1.37				53800	5480	1.37	30 - 4D175 - 35	131	●	●
			55200	5630	1.81				53900	5490	1.89	30 - 4D180 - 35 ※	131	●	●
			76300	7780	1.89				73700	7510	1.89	30 - 4E180 - 35 ※	133	●	●
			76300	7780	2.05				73700	7510	2.05	30 - 4E185 - 35 ※	133	●	●
			76300	7780	2.09				73700	7510	2.30	30 - 4E190 - 35 ※	133	△	●
			76300	7780	2.09				73700	7510	2.50	30 - 4E195 - 35 ※	133	△	●
			135000	13800	2.05				130000	13300	2.05	30 - 4F185 - 35 ※	135	●	●
			135000	13800	2.30				130000	13300	2.30	30 - 4F190 - 35 ※	135	△	●
			135000	13800	2.50				130000	13300	2.50	30 - 4F195 - 35 ※	135	△	●

Selection Table for Gearmotors

22 kW	Frequency	Hz	50Hz	60Hz
	Motor poles	P	4	
	Motor speed n_1	r/min	1450	1750

IMPORTANT :
Please refer to page 54 for Gearmotor Selection Table notes.

Reduction ratio 39 ► 67

50Hz						60Hz						Model (refer to page 23)	Dimensional Drawing Page	Options Available Note 11	
Output Speed n_2	Output Torque T_{out}		Allowable Radial Load of Output Shaft Pro		SF_G	Output Speed n_2	Output Torque T_{out}		Allowable Radial Load of Output Shaft Pro		SF_G	Capacity Symbol - Frame Size - Reduction Ratio		AF Motor Note 10	High-Efficiency Motor
r/min	N·m	kgf·m	N	kgf		r/min	N·m	kgf·m	N	kgf					
37.7	5140	524	30700	3130	1.00	45.5	4260	434	31200	3180	1.00	30 - 4C165 - 39	129	●	●
			55700	5680	1.10				54500	5560	1.10	30 - 4D165 - 39	131	●	●
			55700	5680	1.25				54500	5560	1.25	30 - 4D170 - 39	131	●	●
			55700	5680	1.37				54500	5560	1.37	30 - 4D175 - 39	131	●	●
			55700	5680	1.67				54500	5560	1.89	30 - 4D180 - 39	131	●	●
			77500	7900	1.89				75000	7650	1.89	30 - 4E180 - 39	133	●	●
			77500	7900	1.91				75000	7650	2.05	30 - 4E185 - 39	133	●	●
			77500	7900	1.91				75000	7650	2.30	30 - 4E190 - 39	133	△	●
			134000	13700	1.89				133000	13600	1.89	30 - 4F180 - 39	135	●	●
			134000	13700	2.05				133000	13600	2.05	30 - 4F185 - 39	135	●	●
			134000	13700	2.30				133000	13600	2.30	30 - 4F190 - 39	135	△	●
			134000	13700	2.50				133000	13600	2.50	30 - 4F195 - 39	135	△	●
31.9	6080	620	20100	2050	0.85	38.5	5040	514	30800	3140	0.85	30 - 4C160 - 46	129	—	—
			20100	2050	0.85				30800	3140	0.85	30 - 4C165 - 46	129	●	●
			56400	5750	1.24				55600	5670	1.24	30 - 4D170 - 46	131	●	●
			56400	5750	1.37				55600	5670	1.37	30 - 4D175 - 46	131	●	●
			56400	5750	1.43				55600	5670	1.69	30 - 4D180 - 46	131	●	●
			79600	8110	1.62				77200	7870	1.89	30 - 4E180 - 46	133	●	●
			79600	8110	1.62				77200	7870	1.95	30 - 4E185 - 46	133	●	●
			133000	13600	1.89				135000	13800	1.89	30 - 4F180 - 46	135	●	●
			133000	13600	2.05				135000	13800	2.05	30 - 4F185 - 46	135	●	●
			133000	13600	2.30				135000	13800	2.30	30 - 4F190 - 46	135	△	●
			133000	13600	2.50				135000	13800	2.50	30 - 4F195 - 46	135	△	●
27.6	7010	715	56800	5790	1.02	33.3	5810	592	56300	5740	1.03	30 - 4D165 - 53	131	●	●
			56800	5790	1.16				56300	5740	1.16	30 - 4D170 - 53	131	●	●
			56800	5790	1.24				56300	5740	1.24	30 - 4D175 - 53	131	●	●
			56800	5790	1.24				56200	5730	1.47	30 - 4D180 - 53	131	●	●
			81100	8270	1.37				79000	8050	1.37	30 - 4E175 - 53	133	●	●
			81100	8270	1.40				79000	8050	1.47	30 - 4E180 - 53	133	●	●
			81100	8270	1.40				79000	8050	1.69	30 - 4E185 - 53	133	●	●
			131000	13400	1.47				133000	13600	1.47	30 - 4F180 - 53	135	●	●
			131000	13400	1.77				133000	13600	1.77	30 - 4F185 - 53	135	●	●
			131000	13400	2.30				133000	13600	2.30	30 - 4F190 - 53	135	△	●
			131000	13400	2.50				133000	13600	2.50	30 - 4F195 - 53	135	△	●
24.4	7950	810	56800	5790	0.86	29.4	6590	672	56700	5780	0.86	30 - 4D165 - 60	131	—	—
			56800	5790	1.10				56700	5780	1.10	30 - 4D175 - 60	131	●	●
			56800	5790	1.10				56700	5780	1.32	30 - 4D180 - 60	131	●	●
			82300	8390	1.24				80500	8210	1.39	30 - 4E180 - 60	133	●	●
			82300	8390	1.24				80500	8210	1.49	30 - 4E185 - 60	133	●	●
			130000	13300	1.39				132000	13500	1.39	30 - 4F180 - 60	135	●	●
			130000	13300	1.74				132000	13500	1.77	30 - 4F185 - 60	135	●	●
			130000	13300	2.26				132000	13500	2.30	30 - 4F190 - 60	135	△	●
			130000	13300	2.26				132000	13500	2.50	30 - 4F195 - 60	135	△	●
21.6	8980	915	46200	4710	0.97	26.0	7440	758	56700	5780	0.97	30 - 4D175 - 67	131	—	—
			46200	4710	0.97				56800	5790	1.17	30 - 4D180 - 67	131	●	●
			83100	8470	1.07				81600	8320	1.10	30 - 4E175 - 67	133	●	●
			83200	8480	1.09				81700	8330	1.32	30 - 4E180 - 67	133	●	●
			128000	13000	1.36				130000	13300	1.36	30 - 4F180 - 67	135	●	●
			128000	13000	1.73				130000	13300	1.77	30 - 4F185 - 67	135	●	●
			128000	13000	1.86				130000	13300	1.86	30 - 4F190 - 67	135	●	●
			128000	13000	2.00				130000	13300	2.19	30 - 4F195 - 67	135	●	●

Selection Table for Gearmotors

22 kW	Frequency	Hz	50Hz	60Hz
	Motor poles	P	4	
	Motor speed n_1	r/min	1450	1750

IMPORTANT :
Please refer to page 54 for Gearmotor Selection Table notes.

Reduction ratio 74 ► 151

50Hz						60Hz						Model (refer to page 23)	Dimensional Drawing Page	Options Available Note 11	
Output Speed n_2	Output Torque T_{out}		Allowable Radial Load of Output Shaft Pro		SF_G	Output Speed n_2	Output Torque T_{out}		Allowable Radial Load of Output Shaft Pro		SF_G	Capacity - Frame Size - Reduction Ratio		AF Motor Note 10	High-Efficiency Motor
r/min	N·m	kgf·m	N	kgf		r/min	N·m	kgf·m	N	kgf					
19.7	9820	1000	25600	2610	0.89	23.8	8140	830	56800	5790	0.89	30 - 4D175 - 74	131	–	–
			25600	2610	0.89				56800	5790	1.07	30 - 4D180 - 74	131	●	●
			83800	8540	1.00				82500	8410	1.00	30 - 4E175 - 74	133	●	●
			83800	8540	1.00				82500	8410	1.21	30 - 4E180 - 74	133	●	●
			126000	12800	1.36				129000	13100	1.36	30 - 4F180 - 74	135	●	●
			126000	12800	1.73				129000	13100	1.77	30 - 4F185 - 74	135	●	●
			126000	12800	1.83				129000	13100	1.86	30 - 4F190 - 74	135	●	●
			126000	12800	1.83				129000	13100	2.19	30 - 4F195 - 74	135	●	●
18.1	10700	1090	-	-	0.82	21.9	8860	903	48400	4930	0.99	30 - 4D180 - 80	131	–	–
			84000	8560	0.89				83000	8460	0.89	30 - 4E175 - 80	133	–	–
			84200	8580	0.92				83100	8470	1.10	30 - 4E180 - 80	133	●	●
			125000	12700	1.10				128000	13000	1.10	30 - 4F180 - 80	135	●	●
			125000	12700	1.37				128000	13000	1.37	30 - 4F185 - 80	135	●	●
			125000	12700	1.60				128000	13000	1.60	30 - 4F190 - 80	135	●	●
			125000	12700	1.68				128000	13000	1.84	30 - 4F195 - 80	135	●	●
16.6	11700	1190	81100	8270	0.84	20.0	9690	988	83700	8530	0.84	30 - 4E175 - 88	133	–	–
			81100	8270	0.84				83700	8530	1.01	30 - 4E180 - 88	133	●	●
			123000	12500	1.10				127000	12900	1.10	30 - 4F180 - 88	135	●	●
			123000	12500	1.37				127000	12900	1.37	30 - 4F185 - 88	135	●	●
			123000	12500	1.54				127000	12900	1.60	30 - 4F190 - 88	135	●	●
			123000	12500	1.54				127000	12900	1.84	30 - 4F195 - 88	135	●	●
14.3	13600	1390	120000	12200	0.89	17.2	11200	1140	124000	12600	0.89	30 - 4F180 - 102	135	–	–
			120000	12200	1.10				124000	12600	1.10	30 - 4F185 - 102	135	●	●
			120000	12200	1.33				124000	12600	1.40	30 - 4F190 - 102	135	●	●
			120000	12200	1.33				124000	12600	1.60	30 - 4F195 - 102	135	●	●
12.9	15000	1530	118000	12000	0.84	15.6	12400	1260	122000	12400	0.86	30 - 4F180 - 112	135	–	–
			118000	12000	1.03				122000	12400	1.03	30 - 4F185 - 112	135	●	●
			118000	12000	1.10				122000	12400	1.10	30 - 4F190 - 112	135	●	●
			118000	12000	1.20				122000	12400	1.37	30 - 4F195 - 112	135	●	●
11.8	16400	1670	115000	11700	0.84	14.3	13600	1390	120000	12200	0.86	30 - 4F180 - 123	135	–	–
			115000	11700	1.03				120000	12200	1.03	30 - 4F185 - 123	135	●	●
			115000	11700	1.10				120000	12200	1.10	30 - 4F190 - 123	135	●	●
			115000	11700	1.10				120000	12200	1.33	30 - 4F195 - 123	135	●	●
9.63	20100	2050	109000	11100	0.85	11.6	16700	1700	115000	11700	0.86	30 - 4F185 - 151	135	–	–
			109000	11100	0.90				115000	11700	0.95	30 - 4F190 - 151	135	–	–
			109000	11100	0.90				115000	11700	1.08	30 - 4F195 - 151	135	●	●

Selection Table for Gearmotors

30 kW	Frequency	Hz	50Hz	60Hz
	Motor poles	P	4	
	Motor speed n_1	r/min	1450	1750

IMPORTANT :
Please refer to page 54 for Gearmotor Selection Table notes.

Reduction ratio 11 ► 22

50Hz						60Hz						Model (refer to page 23)	Dimensional Drawing Page	Options Available Note 11	
Output Speed n_2	Output Torque T_{out}		Allowable Radial Load of Output Shaft Pro		SF_G	Output Speed n_2	Output Torque T_{out}		Allowable Radial Load of Output Shaft Pro		SF_G	Capacity - Frame Size - Reduction Ratio		AF Motor Note 10	High-Efficiency Motor
r/min	N·m	kgf·m	N	kgf		r/min	N·m	kgf·m	N	kgf					
138	1910	195	26600	2710	1.00	167	1580	161	26000	2650	1.00	40 - 4C165 - 11	129	●	●
			26600	2710	1.38				26000	2650	1.38	40 - 4C170 - 11 ※	129	●	●
			26600	2710	1.50				26000	2650	1.50	40 - 4C175 - 11 ※	129	●	●
			42700	4350	1.38				41000	4180	1.38	40 - 4D170 - 11 ※	131	●	●
			42700	4350	1.50				41000	4180	1.50	40 - 4D175 - 11 ※	131	●	●
			42700	4350	1.78				41000	4180	1.78	40 - 4D180 - 11 ※	131	△	●
			42700	4350	2.00				41000	4180	2.00	40 - 4D185 - 11 ※	131	△	●
			57000	5810	2.28				54500	5560	2.28	40 - 4E190 - 11 ※	133	△	●
			57000	5810	2.50				54500	5560	2.50	40 - 4E195 - 11 ※	133	△	●
113	2330	238	27100	2760	1.00	137	1930	197	26600	2710	1.00	40 - 4C165 - 13	129	●	●
			27100	2760	1.38				26700	2720	1.38	40 - 4C170 - 13 ※	129	●	●
			27100	2760	1.50				26700	2720	1.50	40 - 4C175 - 13 ※	129	●	●
			44300	4520	1.38				42800	4360	1.38	40 - 4D170 - 13 ※	131	●	●
			44300	4520	1.50				42800	4360	1.50	40 - 4D175 - 13 ※	131	●	●
			44300	4520	1.78				42800	4360	1.78	40 - 4D180 - 13 ※	131	△	●
			44300	4520	2.00				42800	4360	2.00	40 - 4D185 - 13 ※	131	△	●
			59600	6080	2.28				57200	5830	2.28	40 - 4E190 - 13 ※	133	△	●
			59600	6080	2.50				57200	5830	2.50	40 - 4E195 - 13 ※	133	△	●
104	2550	260	27300	2780	1.00	125	2110	215	26900	2740	1.00	40 - 4C165 - 14	129	●	●
			27300	2780	1.38				26900	2740	1.38	40 - 4C170 - 14 ※	129	●	●
			27300	2780	1.50				26900	2740	1.50	40 - 4C175 - 14 ※	129	●	●
			45100	4600	1.38				43500	4430	1.38	40 - 4D170 - 14 ※	131	●	●
			45100	4600	1.50				43500	4430	1.50	40 - 4D175 - 14 ※	131	●	●
			45100	4600	1.78				43500	4430	1.78	40 - 4D180 - 14 ※	131	△	●
			45100	4600	2.00				43500	4430	2.00	40 - 4D185 - 14 ※	131	△	●
			60800	6200	2.28				58300	5940	2.28	40 - 4E190 - 14 ※	133	△	●
			60800	6200	2.50				58300	5940	2.50	40 - 4E195 - 14 ※	133	△	●
90.6	2910	297	27400	2790	1.00	109	2420	247	27100	2760	1.00	40 - 4C165 - 16	129	●	●
			27400	2790	1.38				27200	2770	1.38	40 - 4C170 - 16 ※	129	●	●
			27400	2790	1.47				27200	2770	1.50	40 - 4C175 - 16 ※	129	●	●
			46100	4700	1.38				44600	4550	1.38	40 - 4D170 - 16 ※	131	●	●
			46100	4700	1.50				44600	4550	1.50	40 - 4D175 - 16 ※	131	●	●
			46100	4700	1.78				44600	4550	1.78	40 - 4D180 - 16 ※	131	△	●
			46100	4700	2.00				44600	4550	2.00	40 - 4D185 - 16 ※	131	△	●
			62600	6380	2.28				60100	6130	2.28	40 - 4E190 - 16 ※	133	△	●
			62600	6380	2.50				60100	6130	2.50	40 - 4E195 - 16 ※	133	△	●
82.9	3190	325	27500	2800	1.00	100	2640	269	27300	2780	1.00	40 - 4C165 - 18	129	●	●
			27500	2800	1.38				27300	2780	1.38	40 - 4C170 - 18 ※	129	●	●
			27500	2800	1.38				27300	2780	1.50	40 - 4C175 - 18 ※	129	●	●
			46700	4760	1.38				45300	4620	1.38	40 - 4D170 - 18 ※	131	●	●
			46700	4760	1.50				45300	4620	1.50	40 - 4D175 - 18 ※	131	●	●
			46700	4760	1.78				45300	4620	1.78	40 - 4D180 - 18 ※	131	△	●
			46700	4760	2.00				45300	4620	2.00	40 - 4D185 - 18 ※	131	△	●
			63700	6490	2.00				61300	6250	2.00	40 - 4E185 - 18 ※	133	△	●
			63700	6490	2.28				61300	6250	2.28	40 - 4E190 - 18 ※	133	△	●
			63700	6490	2.50				61300	6250	2.50	40 - 4E195 - 18 ※	133	△	●
			112000	11400	2.50				107000	10900	2.50	40 - 4F195 - 18 ※	135	△	●
69.0	3830	390	27300	2780	1.00	83.3	3170	323	27500	2800	1.00	40 - 4C165 - 21	129	●	●
			47900	4880	1.23				46700	4760	1.23	40 - 4D175 - 21	131	●	●
			47900	4880	1.38				46700	4760	1.38	40 - 4D180 - 21 ※	131	△	●
			47900	4880	1.50				46700	4760	1.50	40 - 4D185 - 21 ※	131	△	●
			66000	6730	1.69				63600	6480	1.69	40 - 4E190 - 21 ※	133	△	●
			66000	6730	1.83				63600	6480	1.83	40 - 4E195 - 21 ※	133	△	●
64.7	4080	416	27100	2760	1.13	78.1	3380	345	27400	2790	1.13	40 - 4C170 - 22	129	●	●
			27100	2760	1.16				27400	2790	1.23	40 - 4C175 - 22	129	●	●
			48200	4910	1.23				47000	4790	1.23	40 - 4D175 - 22	131	●	●
			48200	4910	1.38				47100	4800	1.38	40 - 4D180 - 22 ※	131	△	●
			48200	4910	1.50				47100	4800	1.50	40 - 4D185 - 22 ※	131	△	●
			66700	6800	1.69				64400	6560	1.69	40 - 4E190 - 22 ※	133	△	●
			66700	6800	1.83				64400	6560	1.83	40 - 4E195 - 22 ※	133	△	●

Selection Table for Gearmotors

30 kW	Frequency	Hz	50Hz	60Hz
	Motor poles	P	4	
	Motor speed n_1	r/min	1450	1750

IMPORTANT :
Please refer to page 54 for Gearmotor Selection Table notes.

Reduction ratio 25 ►53

50Hz						60Hz						Model (refer to page 23)	Dimensional Drawing Page	Options Available Note 11	
Output Speed n_2	Output Torque T_{out}		Allowable Radial Load of Output Shaft Pro		SF_G	Output Speed n_2	Output Torque T_{out}		Allowable Radial Load of Output Shaft Pro		SF_G	Capacity Symbol - Frame Size - Reduction Ratio		AF Motor Note 10	High-Efficiency Motor
r/min	N·m	kgf·m	N	kgf		r/min	N·m	kgf·m	N	kgf					
59.2	4460	455	48700	4960	1.13	71.4	3700	377	47700	4860	1.13	40 - 4D170 - 25	131	●	●
			48700	4960	1.23				47700	4860	1.23	40 - 4D175 - 25	131	●	●
			48700	4960	1.38				47700	4860	1.38	40 - 4D180 - 25 ※	131	△	●
			48700	4960	1.50				47700	4860	1.50	40 - 4D185 - 25 ※	131	△	●
			67800	6910	1.50				65600	6690	1.50	40 - 4E185 - 25 ※	133	△	●
			67800	6910	1.69				65600	6690	1.69	40 - 4E190 - 25 ※	133	△	●
			67800	6910	1.83				65600	6690	1.83	40 - 4E195 - 25 ※	133	△	●
51.8	5100	520	26300	2680	0.98	62.5	4230	431	27100	2760	1.01	40 - 4C170 - 28	129	●	●
			49300	5030	1.13				48400	4930	1.13	40 - 4D170 - 28	131	●	●
			49300	5030	1.23				48400	4930	1.23	40 - 4D175 - 28	131	●	●
			49300	5030	1.38				48400	4930	1.38	40 - 4D180 - 28 ※	131	△	●
			49300	5030	1.50				48400	4930	1.50	40 - 4D185 - 28 ※	131	△	●
			69200	7050	1.38				67100	6840	1.38	40 - 4E180 - 28 ※	133	△	●
			69200	7050	1.50				67100	6840	1.50	40 - 4E185 - 28 ※	133	△	●
			69200	7050	1.69				67100	6840	1.69	40 - 4E190 - 28 ※	133	△	●
			69200	7050	1.83				67100	6840	1.83	40 - 4E195 - 28 ※	133	△	●
			126000	12800	1.83				120000	12200	1.83	40 - 4F195 - 28 ※	135	△	●
41.2	6410	653	49600	5060	1.00	49.7	5310	541	49300	5030	1.00	40 - 4D175 - 35	131	●	●
			49700	5070	1.33				49400	5040	1.38	40 - 4D180 - 35 ※	131	●	●
			71400	7280	1.38				69600	7090	1.38	40 - 4E180 - 35 ※	133	●	●
			71400	7280	1.50				69600	7090	1.50	40 - 4E185 - 35 ※	133	●	●
			71400	7280	1.53				69600	7090	1.69	40 - 4E190 - 35 ※	133	△	●
			71400	7280	1.53				69600	7090	1.83	40 - 4E195 - 35 ※	133	△	●
			132000	13500	1.50				127000	12900	1.50	40 - 4F185 - 35 ※	135	●	●
			132000	13500	1.69				127000	12900	1.69	40 - 4F190 - 35 ※	135	△	●
			132000	13500	1.83				127000	12900	1.83	40 - 4F195 - 35 ※	135	△	●
37.7	7010	715	49800	5080	1.00	45.5	5810	592	49600	5060	1.00	40 - 4D175 - 39	131	●	●
			49800	5080	1.22				49600	5060	1.38	40 - 4D180 - 39	131	●	●
			72100	7350	1.38				70500	7190	1.38	40 - 4E180 - 39	133	●	●
			72100	7350	1.40				70500	7190	1.50	40 - 4E185 - 39	133	●	●
			72100	7350	1.40				70500	7190	1.69	40 - 4E190 - 39	133	△	●
			131000	13400	1.38				129000	13100	1.38	40 - 4F180 - 39	135	●	●
			131000	13400	1.50				129000	13100	1.50	40 - 4F185 - 39	135	●	●
			131000	13400	1.69				129000	13100	1.69	40 - 4F190 - 39	135	△	●
			131000	13400	1.83				129000	13100	1.83	40 - 4F195 - 39	135	△	●
31.9	8290	845	49400	5040	1.00	38.5	6870	700	49800	5080	1.00	40 - 4D175 - 46	131	●	●
			49400	5040	1.05				49800	5080	1.24	40 - 4D180 - 46	131	●	●
			73200	7460	1.19				72000	7340	1.38	40 - 4E180 - 46	133	●	●
			73200	7460	1.19				72000	7340	1.43	40 - 4E185 - 46	133	●	●
			129000	13100	1.38				131000	13400	1.38	40 - 4F180 - 46	135	●	●
			129000	13100	1.50				131000	13400	1.50	40 - 4F185 - 46	135	●	●
			129000	13100	1.69				131000	13400	1.69	40 - 4F190 - 46	135	△	●
			129000	13100	1.83				131000	13400	1.83	40 - 4F195 - 46	135	△	●
27.6	9560	975	33500	3410	0.91	33.3	7920	807	49600	5060	0.91	40 - 4D175 - 53	131	—	—
			33500	3410	0.91				49600	5060	1.08	40 - 4D180 - 53	131	●	●
			73800	7520	1.00				72900	7430	1.00	40 - 4E175 - 53	133	●	●
			73800	7520	1.03				72900	7430	1.08	40 - 4E180 - 53	133	●	●
			73800	7520	1.03				72900	7430	1.24	40 - 4E185 - 53	133	●	●
			127000	12900	1.08				130000	13300	1.08	40 - 4F180 - 53	135	●	●
			127000	12900	1.30				130000	13300	1.30	40 - 4F185 - 53	135	●	●
			127000	12900	1.69				130000	13300	1.69	40 - 4F190 - 53	135	△	●
			127000	12900	1.83				130000	13300	1.83	40 - 4F195 - 53	135	△	●

Selection Table for Gearmotors

30 kW

Frequency	Hz	50Hz	60Hz
Motor poles	P	4	
Motor speed n_1	r/min	1450	1750

IMPORTANT :
Please refer to page 54 for Gearmotor Selection Table notes.

Reduction ratio 60 ►112

50Hz						60Hz						Model (refer to page 23)	Dimensional Drawing Page	Options Available Note 11	
Output Speed n_2	Output Torque T_{out}		Allowable Radial Load of Output Shaft Pro		SF_G	Output Speed n_2	Output Torque T_{out}		Allowable Radial Load of Output Shaft Pro		SF_G	Capacity - Symbol - Frame Size - Reduction Ratio		AF Motor Note 10	High-Efficiency Motor
r/min	N·m	kgf·m	N	kgf		r/min	N·m	kgf·m	N	kgf					
24.4	10800	1100	74000	7540	0.80	29.4	8980	915	73600	7500	0.80	40 - 4E175 - 60	133	—	—
			74000	7540	0.91				73600	7500	1.02	40 - 4E180 - 60	133	●	●
			74000	7540	0.91				73600	7500	1.09	40 - 4E185 - 60	133	●	●
			125000	12700	1.02				128000	13000	1.02	40 - 4F180 - 60	135	●	●
			125000	12700	1.27				128000	13000	1.30	40 - 4F185 - 60	135	●	●
			125000	12700	1.66				128000	13000	1.69	40 - 4F190 - 60	135	△	●
			125000	12700	1.66				128000	13000	1.83	40 - 4F195 - 60	135	△	●
21.6	12200	1240	73800	7520	0.80	26.0	10100	1030	73900	7530	0.97	40 - 4E180 - 67	133	—	—
			122000	12400	1.27				126000	12800	1.30	40 - 4F185 - 67	135	●	●
			122000	12400	1.37				126000	12800	1.37	40 - 4F190 - 67	135	●	●
			122000	12400	1.47				126000	12800	1.60	40 - 4F195 - 67	135	●	●
19.7	13400	1370	120000	12200	1.00	23.8	11100	1130	124000	12600	1.00	40 - 4F180 - 74	135	●	●
			120000	12200	1.27				124000	12600	1.30	40 - 4F185 - 74	135	●	●
			120000	12200	1.34				124000	12600	1.37	40 - 4F190 - 74	135	●	●
			120000	12200	1.34				124000	12600	1.60	40 - 4F195 - 74	135	●	●
18.1	14600	1490	118000	12000	0.80	21.9	12100	1230	123000	12500	0.80	40 - 4F180 - 80	135	—	—
			118000	12000	1.00				123000	12500	1.00	40 - 4F185 - 80	135	●	●
			118000	12000	1.17				123000	12500	1.17	40 - 4F190 - 80	135	●	●
			118000	12000	1.24				123000	12500	1.35	40 - 4F195 - 80	135	●	●
16.6	15900	1620	116000	11800	0.80	20.0	13200	1350	121000	12300	0.80	40 - 4F180 - 88	135	—	—
			116000	11800	1.00				121000	12300	1.00	40 - 4F185 - 88	135	●	●
			116000	11800	1.13				121000	12300	1.17	40 - 4F190 - 88	135	●	●
			116000	11800	1.13				121000	12300	1.35	40 - 4F195 - 88	135	●	●
14.3	18500	1890	112000	11400	0.80	17.2	15300	1560	117000	11900	0.80	40 - 4F185 - 102	135	—	—
			112000	11400	0.97				117000	11900	1.02	40 - 4F190 - 102	135	●	●
			112000	11400	0.97				117000	11900	1.17	40 - 4F195 - 102	135	●	●
12.9	20400	2080	108000	11000	0.81	15.6	16900	1720	114000	11600	0.81	40 - 4F190 - 112	135	—	—
			108000	11000	0.88				114000	11600	1.00	40 - 4F195 - 112	135	●	●

37 kW

Frequency	Hz	50Hz	60Hz
Motor poles	P	4	
Motor speed n_1	r/min	1450	1750

IMPORTANT :
Please refer to page 54 for Gearmotor Selection Table notes.

Reduction ratio 11 ► 11

50Hz						60Hz						Model (refer to page 23)	Dimensional Drawing Page	Options Available Note 11	
Output Speed n_2	Output Torque T_{out}		Allowable Radial Load of Output Shaft Pro		SF_G	Output Speed n_2	Output Torque T_{out}		Allowable Radial Load of Output Shaft Pro		SF_G	Capacity - Symbol - Frame Size - Reduction Ratio		AF Motor Note 10	High-Efficiency Motor
r/min	N·m	kgf·m	N	kgf		r/min	N·m	kgf·m	N	kgf					
138	2360	241	25000	2550	1.12	167	1950	199	24600	2510	1.12	50 - 4C170 - 11 ※	129	△	△
			25000	2550	1.22				24600	2510	1.22	50 - 4C175 - 11 ※	129	△	△
			41300	4210	1.12				39900	4070	1.12	50 - 4D170 - 11 ※	131	△	△
			41300	4210	1.22				39900	4070	1.22	50 - 4D175 - 11 ※	131	△	△
			41300	4210	1.44				39900	4070	1.44	50 - 4D180 - 11 ※	131	△	△
			41300	4210	1.62				39900	4070	1.62	50 - 4D185 - 11 ※	131	△	△
			55700	5680	1.85				53500	5450	1.85	50 - 4E190 - 11 ※	133	△	△
			55700	5680	2.03				53500	5450	2.03	50 - 4E195 - 11 ※	133	△	△

Selection Table for Gearmotors

37 kW	Frequency	Hz	50Hz	60Hz
	Motor poles	P	4	
	Motor speed n_1	r/min	1450	1750

IMPORTANT :
Please refer to page 54 for Gearmotor Selection Table notes.

Reduction ratio 13 ►35

50Hz						60Hz						Model (refer to page 23)	Dimensional Drawing Page	Options Available Note 11	
Output Speed n_2	Output Torque T_{out}		Allowable Radial Load of Output Shaft Pro		SF_G	Output Speed n_2	Output Torque T_{out}		Allowable Radial Load of Output Shaft Pro		SF_G	Capacity - Frame Size - Reduction Ratio		AF Motor Note 10	High-Efficiency Motor
r/min	N·m	kgf·m	N	kgf		r/min	N·m	kgf·m	N	kgf					
113	2880	294	25100	2560	1.12	137	2380	243	25000	2550	1.12	50 - 4C170 - 13 ※	129	△	△
			25100	2560	1.22				25000	2550	1.22	50 - 4C175 - 13 ※	129	△	△
			42600	4340	1.12				41300	4210	1.12	50 - 4D170 - 13 ※	131	△	△
			42600	4340	1.22				41300	4210	1.22	50 - 4D175 - 13 ※	131	△	△
			42600	4340	1.44				41300	4210	1.44	50 - 4D180 - 13 ※	131	△	△
			42600	4340	1.62				41300	4210	1.62	50 - 4D185 - 13 ※	131	△	△
			58100	5920	1.85				55900	5700	1.85	50 - 4E190 - 13 ※	133	△	△
			58100	5920	2.03				55900	5700	2.03	50 - 4E195 - 13 ※	133	△	△
104	3150	321	25100	2560	1.12	125	2610	266	25100	2560	1.12	50 - 4C170 - 14 ※	129	△	△
			25100	2560	1.22				25100	2560	1.22	50 - 4C175 - 14 ※	129	△	△
			43200	4400	1.12				42000	4280	1.12	50 - 4D170 - 14 ※	131	△	△
			43200	4400	1.22				42000	4280	1.22	50 - 4D175 - 14 ※	131	△	△
			43200	4400	1.44				42000	4280	1.44	50 - 4D180 - 14 ※	131	△	△
			43200	4400	1.62				42000	4280	1.62	50 - 4D185 - 14 ※	131	△	△
			59100	6020	1.85				56900	5800	1.85	50 - 4E190 - 14 ※	133	△	△
			59100	6020	2.03				56900	5800	2.03	50 - 4E195 - 14 ※	133	△	△
90.6	3590	366	24900	2540	1.12	109	2980	304	25100	2560	1.12	50 - 4C170 - 16 ※	129	△	△
			24900	2540	1.19				25100	2560	1.22	50 - 4C175 - 16 ※	129	△	△
			43900	4480	1.12				42800	4360	1.12	50 - 4D170 - 16 ※	131	△	△
			43900	4480	1.22				42800	4360	1.22	50 - 4D175 - 16 ※	131	△	△
			43900	4480	1.44				42800	4360	1.44	50 - 4D180 - 16 ※	131	△	△
			43900	4480	1.62				42800	4360	1.62	50 - 4D185 - 16 ※	131	△	△
			60600	6180	1.85				58500	5960	1.85	50 - 4E190 - 16 ※	133	△	△
			60600	6180	2.03				58500	5960	2.03	50 - 4E195 - 16 ※	133	△	△
82.9	3930	401	24700	2520	1.12	100	3260	332	25000	2550	1.12	50 - 4C170 - 18 ※	129	△	△
			24700	2520	1.12				25000	2550	1.22	50 - 4C175 - 18 ※	129	△	△
			44400	4530	1.12				43400	4420	1.12	50 - 4D170 - 18 ※	131	△	△
			44400	4530	1.22				43400	4420	1.22	50 - 4D175 - 18 ※	131	△	△
			44400	4530	1.44				43400	4420	1.44	50 - 4D180 - 18 ※	131	△	△
			44400	4530	1.62				43400	4420	1.62	50 - 4D185 - 18 ※	131	△	△
			61600	6280	1.62				59500	6070	1.62	50 - 4E185 - 18 ※	133	△	△
			61600	6280	1.85				59500	6070	1.85	50 - 4E190 - 18 ※	133	△	△
			61600	6280	2.03				59500	6070	2.03	50 - 4E195 - 18 ※	133	△	△
			110000	11200	2.03				106000	10800	2.03	50 - 4F195 - 18 ※	135	△	△
69.0	4720	481	45100	4600	1.12	83.3	3910	399	44300	4520	1.12	50 - 4D180 - 21 ※	131	△	△
			45100	4600	1.22				44300	4520	1.22	50 - 4D185 - 21 ※	131	△	△
			63400	6460	1.37				61500	6270	1.37	50 - 4E190 - 21 ※	133	△	△
			63400	6460	1.49				61500	6270	1.49	50 - 4E195 - 21 ※	133	△	△
64.7	5030	513	45200	4610	1.12	78.1	4170	425	44600	4550	1.12	50 - 4D180 - 22 ※	131	△	△
			45200	4610	1.22				44600	4550	1.22	50 - 4D185 - 22 ※	131	△	△
			64000	6520	1.37				62200	6340	1.37	50 - 4E190 - 22 ※	133	△	△
			64000	6520	1.49				62200	6340	1.49	50 - 4E195 - 22 ※	133	△	△
59.2	5500	561	45400	4630	1.12	71.4	4560	465	45000	4590	1.12	50 - 4D180 - 25 ※	131	△	△
			45400	4630	1.22				45000	4590	1.22	50 - 4D185 - 25 ※	131	△	△
			64800	6610	1.22				63100	6430	1.22	50 - 4E185 - 25 ※	133	△	△
			64800	6610	1.37				63100	6430	1.37	50 - 4E190 - 25 ※	133	△	△
51.8	6290	641	45500	4640	1.12	62.5	5210	531	45300	4620	1.12	50 - 4D180 - 28 ※	131	△	△
			45500	4640	1.22				45300	4620	1.22	50 - 4D185 - 28 ※	131	△	△
			65800	6710	1.12				64300	6550	1.12	50 - 4E180 - 28 ※	133	△	△
			65800	6710	1.22				64300	6550	1.22	50 - 4E185 - 28 ※	133	△	△
			65800	6710	1.37				64300	6550	1.37	50 - 4E190 - 28 ※	133	△	△
			65800	6710	1.49				64300	6550	1.49	50 - 4E195 - 28 ※	133	△	△
			123000	12500	1.49				118000	12000	1.49	50 - 4F195 - 28 ※	135	△	△
41.2	7910	806	45000	4590	1.08	49.7	6550	668	45400	4630	1.12	50 - 4D180 - 35 ※	131	●	△
			67100	6840	1.12				66100	6740	1.12	50 - 4E180 - 35 ※	133	●	△
			67100	6840	1.22				66100	6740	1.22	50 - 4E185 - 35 ※	133	●	△
			67100	6840	1.24				66100	6740	1.37	50 - 4E190 - 35 ※	133	△	△
			67100	6840	1.24				66100	6740	1.49	50 - 4E195 - 35 ※	133	△	△
			128000	13000	1.22				123000	12500	1.22	50 - 4F185 - 35 ※	135	●	△
			128000	13000	1.37				123000	12500	1.37	50 - 4F190 - 35 ※	135	△	△
			128000	13000	1.49				123000	12500	1.49	50 - 4F195 - 35 ※	135	△	△

Selection Table for Gearmotors

37 kW	Frequency	Hz	50Hz	60Hz
	Motor poles	P	4	
	Motor speed n_1	r/min	1450	1750

IMPORTANT :
Please refer to page 54 for Gearmotor Selection Table notes.

Reduction ratio 39 ► 88

50Hz						60Hz						Model (refer to page 23)	Dimensional Drawing Page	Options Available Note 11	
Output Speed n_2	Output Torque T_{out}		Allowable Radial Load of Output Shaft Pro		SF_G	Output Speed n_2	Output Torque T_{out}		Allowable Radial Load of Output Shaft Pro		SF_G	Capacity Symbol - Frame Size - Reduction Ratio		AF Motor Note 10	High-Efficiency Motor
r/min	N·m	kgf·m	N	kgf		r/min	N·m	kgf·m	N	kgf					
37.7	8650	882	44600	4550	0.99	45.5	7170	731	45300	4620	1.12	50 - 4D180 - 39	131	●	△
			67400	6870	1.12				66600	6790	1.12	50 - 4E180 - 39	133	●	△
			67400	6870	1.14				66600	6790	1.22	50 - 4E185 - 39	133	●	△
			67400	6870	1.14				66600	6790	1.37	50 - 4E190 - 39	133	△	△
			128000	13000	1.12				126000	12800	1.12	50 - 4F180 - 39	135	●	△
			128000	13000	1.22				126000	12800	1.22	50 - 4F185 - 39	135	●	△
			128000	13000	1.37				126000	12800	1.37	50 - 4F190 - 39	135	△	△
			128000	13000	1.49				126000	12800	1.49	50 - 4F195 - 39	135	△	△
31.9	10200	1040	67600	6890	0.96	38.5	8470	863	67300	6860	1.12	50 - 4E180 - 46	133	●	△
			67600	6890	0.96				67300	6860	1.16	50 - 4E185 - 46	133	●	△
			126000	12800	1.12				129000	13100	1.12	50 - 4F180 - 46	135	●	△
			126000	12800	1.22				129000	13100	1.22	50 - 4F185 - 46	135	●	△
			126000	12800	1.37				129000	13100	1.37	50 - 4F190 - 46	135	△	△
			126000	12800	1.49				129000	13100	1.49	50 - 4F195 - 46	135	△	△
27.6	11800	1200	67300	6860	0.83	33.3	9770	996	67600	6890	0.88	50 - 4E180 - 53	133	—	—
			67300	6860	0.83				67600	6890	1.01	50 - 4E185 - 53	133	●	△
			123000	12500	0.88				126000	12800	0.88	50 - 4F180 - 53	135	—	—
			123000	12500	1.05				126000	12800	1.05	50 - 4F185 - 53	135	●	△
			123000	12500	1.37				126000	12800	1.37	50 - 4F190 - 53	135	△	△
			123000	12500	1.49				126000	12800	1.49	50 - 4F195 - 53	135	△	△
24.4	13400	1370	120000	12200	0.83	29.4	11100	1130	124000	12600	0.83	50 - 4F180 - 60	135	—	—
			120000	12200	1.03				124000	12600	1.05	50 - 4F185 - 60	135	●	△
			120000	12200	1.35				124000	12600	1.37	50 - 4F190 - 60	135	△	△
			120000	12200	1.35				124000	12600	1.49	50 - 4F195 - 60	135	△	△
21.6	15100	1540	117000	11900	0.81	26.0	12500	1270	122000	12400	0.81	50 - 4F180 - 67	135	—	—
			117000	11900	1.03				122000	12400	1.05	50 - 4F185 - 67	135	●	△
			117000	11900	1.11				122000	12400	1.11	50 - 4F190 - 67	135	●	△
			117000	11900	1.19				122000	12400	1.30	50 - 4F195 - 67	135	●	△
19.7	16500	1680	115000	11700	0.81	23.8	13700	1400	120000	12200	0.81	50 - 4F180 - 74	135	—	—
			115000	11700	1.03				120000	12200	1.05	50 - 4F185 - 74	135	●	△
			115000	11700	1.09				120000	12200	1.11	50 - 4F190 - 74	135	●	△
			115000	11700	1.09				120000	12200	1.30	50 - 4F195 - 74	135	●	△
18.1	18000	1830	113000	11500	0.81	21.9	14900	1520	118000	12000	0.81	50 - 4F185 - 80	135	—	△
			113000	11500	0.95				118000	12000	0.95	50 - 4F190 - 80	135	—	△
			113000	11500	1.00				118000	12000	1.09	50 - 4F195 - 80	135	●	△
16.6	19700	2010	110000	11200	0.81	20.0	16300	1660	115000	11700	0.81	50 - 4F185 - 88	135	—	—
			110000	11200	0.92				115000	11700	0.95	50 - 4F190 - 88	135	—	—
			110000	11200	0.92				115000	11700	1.09	50 - 4F195 - 88	135	●	△

Selection Table for Gearmotors

45 kW	Frequency	Hz	50Hz	60Hz
	Motor poles	P	4	
	Motor speed n_1	r/min	1450	1750

IMPORTANT :
Please refer to page 54 for Gearmotor Selection Table notes.

Reduction ratio 11 ► 25

50Hz						60Hz						Model (refer to page 23)	Dimensional Drawing Page	Options Available Note 11	
Output Speed n_2	Output Torque T_{out}		Allowable Radial Load of Output Shaft Pro		SF_G	Output Speed n_2	Output Torque T_{out}		Allowable Radial Load of Output Shaft Pro		SF_G	Capacity Symbol - Frame Size - Reduction Ratio		AF Motor Note 10	High-Efficiency Motor
r/min	N·m	kgf·m	N	kgf		r/min	N·m	kgf·m	N	kgf					
138	2870	293	23100	2350	0.92	167	2380	243	23000	2340	0.92	60 - 4C170 - 11 ※	129	—	—
			23100	2350	1.00				23000	2340	1.00	60 - 4C175 - 11 ※	129	—	—
			39700	4050	0.92				38500	3920	0.92	60 - 4D170 - 11 ※	131	—	—
			39700	4050	1.00				38500	3920	1.00	60 - 4D175 - 11 ※	131	—	—
			39700	4050	1.19				38500	3920	1.19	60 - 4D180 - 11 ※	131	—	—
			39700	4050	1.33				38500	3920	1.33	60 - 4D185 - 11 ※	131	—	—
			54300	5540	1.52				52300	5330	1.52	60 - 4E190 - 11 ※	133	—	—
			54300	5540	1.67				52300	5330	1.67	60 - 4E195 - 11 ※	133	—	—
113	3500	357	22800	2320	0.92	137	2900	296	23000	2340	0.92	60 - 4C170 - 13 ※	129	—	—
			22800	2320	1.00				23000	2340	1.00	60 - 4C175 - 13 ※	129	—	—
			40600	4140	0.92				39700	4050	0.92	60 - 4D170 - 13 ※	131	—	—
			40600	4140	1.00				39700	4050	1.00	60 - 4D175 - 13 ※	131	—	—
			40600	4140	1.19				39700	4050	1.19	60 - 4D180 - 13 ※	131	—	—
			40600	4140	1.33				39700	4050	1.33	60 - 4D185 - 13 ※	131	—	—
			56300	5740	1.52				54400	5550	1.52	60 - 4E190 - 13 ※	133	—	—
			56300	5740	1.67				54400	5550	1.67	60 - 4E195 - 13 ※	133	—	—
104	3830	390	22500	2290	0.92	125	3170	323	23000	2340	0.92	60 - 4C170 - 14 ※	129	—	—
			22500	2290	1.00				23000	2340	1.00	60 - 4C175 - 14 ※	129	—	—
			41000	4180	0.92				40200	4100	0.92	60 - 4D170 - 14 ※	131	—	—
			41000	4180	1.00				40200	4100	1.00	60 - 4D175 - 14 ※	131	—	—
			41000	4180	1.19				40200	4100	1.19	60 - 4D180 - 14 ※	131	—	—
			41000	4180	1.33				40200	4100	1.33	60 - 4D185 - 14 ※	131	—	—
			57100	5820	1.52				55300	5640	1.52	60 - 4E190 - 14 ※	133	—	—
			57100	5820	1.67				55300	5640	1.67	60 - 4E195 - 14 ※	133	—	—
90.6	4370	445	22000	2240	0.92	109	3620	369	22700	2310	0.92	60 - 4C170 - 16 ※	129	—	—
			22000	2240	0.98				22700	2310	1.00	60 - 4C175 - 16 ※	129	—	—
			41400	4220	0.92				40800	4160	0.92	60 - 4D170 - 16 ※	131	—	—
			41400	4220	1.00				40800	4160	1.00	60 - 4D175 - 16 ※	131	—	—
			41400	4220	1.19				40800	4160	1.19	60 - 4D180 - 16 ※	131	—	—
			41400	4220	1.33				40800	4160	1.33	60 - 4D185 - 16 ※	131	—	—
			58300	5940	1.52				56600	5770	1.52	60 - 4E190 - 16 ※	133	—	—
			58300	5940	1.67				56600	5770	1.67	60 - 4E195 - 16 ※	133	—	—
82.9	4780	487	21500	2190	0.92	100	3960	404	22400	2280	0.92	60 - 4C170 - 18 ※	129	—	—
			21500	2190	0.92				22400	2280	1.00	60 - 4C175 - 18 ※	129	—	—
			41700	4250	0.92				41100	4190	0.92	60 - 4D170 - 18 ※	131	—	—
			41700	4250	1.00				41100	4190	1.00	60 - 4D175 - 18 ※	131	—	—
			41700	4250	1.19				41100	4190	1.19	60 - 4D180 - 18 ※	131	—	—
			41700	4250	1.33				41100	4190	1.33	60 - 4D185 - 18 ※	131	—	—
			59100	6020	1.33				57500	5860	1.33	60 - 4E185 - 18 ※	133	—	—
			59100	6020	1.52				57500	5860	1.52	60 - 4E190 - 18 ※	133	—	—
			59100	6020	1.67				57500	5860	1.67	60 - 4E195 - 18 ※	133	—	—
			108000	11000	1.67				104000	10600	1.67	60 - 4F195 - 18 ※	135	—	—
69.0	5740	585	41800	4260	0.92	83.3	4750	484	41700	4250	0.92	60 - 4D180 - 21 ※	131	—	—
			41800	4260	1.00				41700	4250	1.00	60 - 4D185 - 21 ※	131	—	—
			60400	6160	1.12				59100	6020	1.12	60 - 4E190 - 21 ※	133	—	—
			60400	6160	1.22				59100	6020	1.22	60 - 4E195 - 21 ※	133	—	—
64.7	6120	624	41800	4260	0.92	78.1	5070	517	41700	4250	0.92	60 - 4D180 - 22 ※	131	—	—
			41800	4260	1.00				41700	4250	1.00	60 - 4D185 - 22 ※	131	—	—
			60800	6200	1.12				59600	6080	1.12	60 - 4E190 - 22 ※	133	—	—
			60800	6200	1.22				59600	6080	1.22	60 - 4E195 - 22 ※	133	—	—
59.2	6690	682	41600	4240	0.92	71.4	5550	566	41800	4260	0.92	60 - 4D180 - 25 ※	131	—	—
			41600	4240	1.00				41800	4260	1.00	60 - 4D185 - 25 ※	131	—	—
			61300	6250	1.00				60200	6140	1.00	60 - 4E185 - 25 ※	133	—	—
			61300	6250	1.12				60200	6140	1.12	60 - 4E190 - 25 ※	133	—	—
			61300	6250	1.22				60200	6140	1.22	60 - 4E195 - 25 ※	133	—	—

Selection Table for Gearmotors

45 kW

Frequency	Hz	50Hz	60Hz
Motor poles	P	4	
Motor speed n_1	r/min	1450	1750

IMPORTANT :
Please refer to page 54 for Gearmotor Selection Table notes.

Reduction ratio 28 ► 80

50Hz						60Hz						Model (refer to page 23)	Dimensional Drawing Page	Options Available Note 11	
Output Speed n_2	Output Torque T_{out}		Allowable Radial Load of Output Shaft Pro		SF_G	Output Speed n_2	Output Torque T_{out}		Allowable Radial Load of Output Shaft Pro		SF_G	Capacity Symbol - Frame Size - Reduction Ratio		AF Motor Note 10	High-Efficiency Motor
r/min	N·m	kgf·m	N	kgf		r/min	N·m	kgf·m	N	kgf					
51.8	7650	780	41200	4200	0.92	62.5	6340	646	41700	4250	0.92	60 - 4D180 - 28 ※	131	—	—
			41200	4200	1.00				41700	4250	1.00	60 - 4D185 - 28 ※	131	—	—
			61900	6310	0.92				61000	6220	0.92	60 - 4E180 - 28 ※	133	—	—
			61900	6310	1.00				61000	6220	1.00	60 - 4E185 - 28 ※	133	—	—
			61900	6310	1.12				61000	6220	1.12	60 - 4E190 - 28 ※	133	—	—
			61900	6310	1.22				61000	6220	1.22	60 - 4E195 - 28 ※	133	—	—
			119000	12100	1.22				115000	11700	1.22	60 - 4F195 - 28 ※	135	—	—
41.2	9620	981	62100	6330	0.92	49.7	7970	812	62000	6320	0.92	60 - 4E180 - 35 ※	133	—	—
			62100	6330	1.00				62000	6320	1.00	60 - 4E185 - 35 ※	133	—	—
			62100	6330	1.02				62000	6320	1.12	60 - 4E190 - 35 ※	133	—	—
			62100	6330	1.02				62000	6320	1.22	60 - 4E195 - 35 ※	133	—	—
			124000	12600	1.00				120000	12200	1.00	60 - 4F185 - 35 ※	135	—	—
			124000	12600	1.12				120000	12200	1.12	60 - 4F190 - 35 ※	135	—	—
			124000	12600	1.22				120000	12200	1.22	60 - 4F195 - 35 ※	135	—	—
37.7	10500	1070	62000	6320	0.92	45.5	8720	889	62100	6330	0.92	60 - 4E180 - 39	133	—	—
			62000	6320	0.93				62100	6330	1.00	60 - 4E185 - 39	133	—	—
			62000	6320	0.93				62100	6330	1.12	60 - 4E190 - 39	133	—	—
			62000	6320	0.93				62100	6330	1.13	60 - 4E195 - 39	133	—	—
			125000	12700	0.92				122000	12400	0.92	60 - 4F180 - 39	135	—	—
			125000	12700	1.00				122000	12400	1.00	60 - 4F185 - 39	135	—	—
			125000	12700	1.12				122000	12400	1.12	60 - 4F190 - 39	135	—	—
			125000	12700	1.22				122000	12400	1.22	60 - 4F195 - 39	135	—	—
31.9	12400	1260	122000	12400	0.92	38.5	10300	1050	125000	12700	0.92	60 - 4F180 - 46	135	—	—
			122000	12400	1.00				125000	12700	1.00	60 - 4F185 - 46	135	—	—
			122000	12400	1.12				125000	12700	1.12	60 - 4F190 - 46	135	—	—
			122000	12400	1.22				125000	12700	1.22	60 - 4F195 - 46	135	—	—
27.6	14300	1460	119000	12100	0.87	33.3	11900	1210	123000	12500	0.87	60 - 4F185 - 53	135	—	—
			119000	12100	1.12				123000	12500	1.12	60 - 4F190 - 53	135	—	—
			119000	12100	1.22				123000	12500	1.22	60 - 4F195 - 53	135	—	—
24.4	16300	1660	115000	11700	0.85	29.4	13500	1380	120000	12200	0.87	60 - 4F185 - 60	135	—	—
			115000	11700	1.11				120000	12200	1.12	60 - 4F190 - 60	135	—	—
			115000	11700	1.11				120000	12200	1.22	60 - 4F195 - 60	135	—	—
21.6	18400	1880	112000	11400	0.85	26.0	15200	1550	117000	11900	0.87	60 - 4F185 - 67	135	—	—
			112000	11400	0.91				117000	11900	0.91	60 - 4F190 - 67	135	—	—
			112000	11400	0.98				117000	11900	1.07	60 - 4F195 - 67	135	—	—
19.7	20100	2050	109000	11100	0.85	23.8	16600	1690	115000	11700	0.87	60 - 4F185 - 74	135	—	—
			109000	11100	0.90				115000	11700	0.91	60 - 4F190 - 74	135	—	—
			109000	11100	0.90				115000	11700	1.07	60 - 4F195 - 74	135	—	—
18.1	21900	2230	94000	9580	0.82	21.9	18100	1850	112000	11400	0.90	60 - 4F195 - 80	135	—	—

55 kW

Frequency	Hz	50Hz	60Hz
Motor poles	P	4	
Motor speed n_1	r/min	1450	1750

IMPORTANT :
Please refer to page 54 for Gearmotor Selection Table notes.

Reduction ratio 11 ► 11

50Hz						60Hz						Model (refer to page 23)	Dimensional Drawing Page	Options Available Note 11	
Output Speed n_2	Output Torque T_{out}		Allowable Radial Load of Output Shaft Pro		SF_G	Output Speed n_2	Output Torque T_{out}		Allowable Radial Load of Output Shaft Pro		SF_G	Capacity Symbol - Frame Size - Reduction Ratio		AF Motor Note 10	High-Efficiency Motor
r/min	N·m	kgf·m	N	kgf		r/min	N·m	kgf·m	N	kgf					
138	3510	358	20700	2110	0.82	167	2910	297	21100	2150	0.82	75 - 4C175 - 11 ※	129	—	—
			37600	3830	0.82				36900	3760	0.82	75 - 4D175 - 11 ※	131	—	—
			37600	3830	0.97				36900	3760	0.97	75 - 4D180 - 11 ※	131	—	—
			37600	3830	1.09				36900	3760	1.09	75 - 4D185 - 11 ※	131	—	—
			52400	5340	1.24				50700	5170	1.24	75 - 4E190 - 11 ※	133	—	—
			52400	5340	1.36				50700	5170	1.36	75 - 4E195 - 11 ※	133	—	—

Selection Table for Gearmotors

55 kW	Frequency	Hz	50Hz	60Hz
	Motor poles	P	4	
	Motor speed n_1	r/min	1450	1750

IMPORTANT :
Please refer to page 54 for Gearmotor Selection Table notes.

Reduction ratio 13 ► 67

50Hz						60Hz						Model (refer to page 23)	Dimensional Drawing Page	Options Available Note 11	
Output Speed n_2	Output Torque T_{out}		Allowable Radial Load of Output Shaft Pro		SF_G	Output Speed n_2	Output Torque T_{out}		Allowable Radial Load of Output Shaft Pro		SF_G	Capacity Symbol - Frame Size - Reduction Ratio		AF Motor Note 10	High-Efficiency Motorrr
r/min	N·m	kgf·m	N	kgf		r/min	N·m	kgf·m	N	kgf					
113	4280	436	19900	2030	0.82	137	3540	361	20600	2100	0.82	75 - 4C175 - 13 ※	129	—	—
			38200	3890	0.82				37700	3840	0.82	75 - 4D175 - 13 ※	131	—	—
			38200	3890	0.97				37700	3840	0.97	75 - 4D180 - 13 ※	131	—	—
			38200	3890	1.09				37700	3840	1.09	75 - 4D185 - 13 ※	131	—	—
			54000	5500	1.24				52500	5350	1.24	75 - 4E190 - 13 ※	133	—	—
			54000	5500	1.36				52500	5350	1.36	75 - 4E195 - 13 ※	133	—	—
104	4680	477	19400	1980	0.82	125	3870	394	20300	2070	0.82	75 - 4C175 - 14 ※	129	—	—
			38300	3900	0.82				37900	3860	0.82	75 - 4D175 - 14 ※	131	—	—
			38300	3900	0.97				37900	3860	0.97	75 - 4D180 - 14 ※	131	—	—
			38300	3900	1.09				37900	3860	1.09	75 - 4D185 - 14 ※	131	—	—
			54700	5580	1.24				53300	5430	1.24	75 - 4E190 - 14 ※	133	—	—
			54700	5580	1.36				53300	5430	1.36	75 - 4E195 - 14 ※	133	—	—
90.6	5340	544	2600	265	0.80	109	4430	452	19700	2010	0.82	75 - 4C175 - 16 ※	129	—	—
			38400	3910	0.82				38200	3890	0.82	75 - 4D175 - 16 ※	131	—	—
			38400	3910	0.97				38200	3890	0.97	75 - 4D180 - 16 ※	131	—	—
			38400	3910	1.09				38200	3890	1.09	75 - 4D185 - 16 ※	131	—	—
			55500	5660	1.24				54300	5540	1.24	75 - 4E190 - 16 ※	133	—	—
			55500	5660	1.36				54300	5540	1.36	75 - 4E195 - 16 ※	133	—	—
82.9	5840	595	38300	3900	0.82	100	4840	493	38400	3910	0.82	75 - 4D175 - 18 ※	131	—	—
			38300	3900	0.97				38400	3910	0.97	75 - 4D180 - 18 ※	131	—	—
			38300	3900	1.09				38400	3910	1.09	75 - 4D185 - 18 ※	131	—	—
			56000	5710	1.09				54900	5600	1.09	75 - 4E185 - 18 ※	133	—	—
			56000	5710	1.24				54900	5600	1.24	75 - 4E190 - 18 ※	133	—	—
			56000	5710	1.36				54900	5600	1.36	75 - 4E195 - 18 ※	133	—	—
			105000	10700	1.36				101000	10300	1.36	75 - 4F195 - 18 ※	133	—	—
69.0	7010	715	37800	3850	0.82	83.3	5810	592	38300	3900	0.82	75 - 4D185 - 21 ※	131	—	—
			56800	5790	0.92				56000	5710	0.92	75 - 4E190 - 21 ※	133	—	—
			56800	5790	1.00				56000	5710	1.00	75 - 4E195 - 21 ※	133	—	—
64.7	7480	762	37500	3820	0.82	78.1	6200	632	38200	3890	0.82	75 - 4D185 - 22 ※	131	—	—
			56900	5800	0.92				56300	5740	0.92	75 - 4E190 - 22 ※	133	—	—
			56900	5800	1.00				56300	5740	1.00	75 - 4E195 - 22 ※	133	—	—
59.2	8180	834	36900	3760	0.82	71.4	6780	691	37900	3860	0.82	75 - 4D185 - 25 ※	131	—	—
			57000	5810	0.82				56700	5780	0.82	75 - 4E185 - 25 ※	133	—	—
			57000	5810	0.92				56700	5780	0.92	75 - 4E190 - 25 ※	133	—	—
			57000	5810	1.00				56700	5780	1.00	75 - 4E195 - 25 ※	133	—	—
51.8	9350	953	57000	5810	0.82	62.5	7750	790	57000	5810	0.82	75 - 4E185 - 28 ※	133	—	—
			57000	5810	0.92				57000	5810	0.92	75 - 4E190 - 28 ※	133	—	—
			57000	5810	1.00				57000	5810	1.00	75 - 4E195 - 28 ※	133	—	—
			115000	11700	1.00				111000	11300	1.00	75 - 4F195 - 28 ※	135	—	—
41.2	11800	1200	56000	5710	0.82	49.7	9740	993	56800	5790	0.82	75 - 4E185 - 35 ※	133	—	—
			56000	5710	0.84				56800	5790	0.92	75 - 4E190 - 35 ※	133	—	—
			56000	5710	0.84				56800	5790	1.00	75 - 4E195 - 35 ※	133	—	—
			118000	12000	0.82				115000	11700	0.82	75 - 4F185 - 35 ※	135	—	—
			118000	12000	0.92				115000	11700	0.92	75 - 4F190 - 35 ※	135	—	—
			118000	12000	1.00				115000	11700	1.00	75 - 4F195 - 35 ※	135	—	—
37.7	12900	1310	120000	12200	0.82	45.5	10700	1090	117000	11900	0.82	75 - 4F185 - 39	135	—	—
			120000	12200	0.92				117000	11900	0.92	75 - 4F190 - 39	135	—	—
			120000	12200	1.00				117000	11900	1.00	75 - 4F195 - 39	135	—	—
31.9	15200	1550	117000	11900	0.82	38.5	12600	1280	119000	12100	0.82	75 - 4F185 - 46	135	—	—
			117000	11900	0.92				119000	12100	0.92	75 - 4F190 - 46	135	—	—
			117000	11900	1.00				119000	12100	1.00	75 - 4F195 - 46	135	—	—
27.6	17500	1780	113000	11500	0.92	33.3	14500	1480	118000	12000	0.92	75 - 4F190 - 53	135	—	—
			113000	11500	1.00				118000	12000	1.00	75 - 4F195 - 53	135	—	—
24.4	19900	2030	109000	11100	0.91	29.4	16500	1680	115000	11700	0.92	75 - 4F190 - 60	135	—	—
			109000	11100	0.91				115000	11700	1.00	75 - 4F195 - 60	135	—	—
21.6	22400	2280	85100	8670	0.80	26.0	18600	1900	111000	11300	0.88	75 - 4F195 - 67	135	—	—

Selection Table for Gearmotors: AF Motors

0.1 kW

Frequency	Hz	60Hz
Motor poles	P	4
Motor speed n_1	r/min	1750

IMPORTANT :
Please refer to page 54 for Gearmotor Selection Table notes.

Reduction ratio 1320 ► 4365

Base Frequency 60Hz									Model (refer to page 23)	Dimensional Drawing page
Output Speed n_2 [r/min]			Output Torque (at 60Hz)Tout		Allowable Radial Load of Output Shaft (at 60Hz) Pro		SF_G (At 60Hz)		Capacity Symbol - Frame Size - Suffix - Reduction Ratio	
At 6Hz	At 60Hz	Allowable Max Speed	N·m	kgf·m	N	kgf				
0.133	1.33	2.65 (120Hz)	630	64.2	24500	2500	1.62		01 - 4A10DA - AV - 1320	125
0.106	1.06	2.11 (120Hz)	791	80.6	22700	2310	1.29		01 - 4A10DA - AV - 1656	125
0.089	0.894	1.79 (120Hz)	934	95.2	20600	2100	1.09		01 - 4A10DA - AV - 1957	125
0.077	0.770	1.54 (120Hz)	1080	110	17700	1800	1.19		01 - 4A12DA - AV - 2272	125
0.077	0.770	1.54 (120Hz)	1080	110	41600	4240	1.98		01 - 4B12DA - AV - 2272	127
0.068	0.684	1.37 (120Hz)	1220	124	14000	1430	1.06		01 - 4A12DA - AV - 2559	125
0.068	0.684	1.37 (120Hz)	1220	124	40700	4150	1.75		01 - 4B12DA - AV - 2559	127
0.059	0.595	1.19 (120Hz)	1410	144	39400	4020	1.53		01 - 4B12DA - AV - 2944	127
0.050	0.499	0.997 (120Hz)	1680	171	36900	3760	1.28		01 - 4B12DA - AV - 3511	127
0.040	0.401	0.802 (120Hz)	2080	212	31800	3240	1.03		01 - 4B12DA - AV - 4365	127

0.2 kW

Frequency	Hz	60Hz
Motor poles	P	4
Motor speed n_1	r/min	1750

IMPORTANT :
Please refer to page 54 for Gearmotor Selection Table notes.

Reduction ratio 417 ► 10658

Base Frequency 60Hz									Model (refer to page 23)	Dimensional Drawing page
Output Speed n_2 [r/min]			Output Torque (at 60Hz)Tout		Allowable Radial Load of Output Shaft (at 60Hz) Pro		SF_G (At 60Hz)		Capacity Symbol - Frame Size - Suffix - Reduction Ratio	
At 6Hz	At 60Hz	Allowable Max Speed	N·m	kgf·m	N	kgf				
0.420	4.20	8.40 (120Hz)	419	42.7	26300	2680	1.05		02 - 4A100DA - AV - 417	125
0.256	2.56	5.13 (120Hz)	652	66.5	24300	2480	1.57		02 - 4A10DA - AV - 683	125
0.216	2.16	4.33 (120Hz)	772	78.7	23000	2340	1.32		02 - 4A10DA - AV - 809	125
0.183	1.83	3.66 (120Hz)	913	93.1	21000	2140	1.12		02 - 4A10DA - AV - 956	125
0.157	1.57	3.13 (120Hz)	1070	109	18100	1850	1.21		02 - 4A12DA - AV - 1117	125
0.157	1.57	3.13 (120Hz)	1070	109	41700	4250	2.01		02 - 4B12DA - AV - 1117	127
0.133	1.33	2.65 (120Hz)	1260	128	12700	1290	1.02		02 - 4A12DA - AV - 1320	125
0.133	1.33	2.65 (120Hz)	1260	128	40500	4130	1.70		02 - 4B12DA - AV - 1320	127
0.106	1.06	2.11 (120Hz)	1580	161	37800	3850	1.36		02 - 4B12DA - AV - 1656	127
0.089	0.894	1.79 (120Hz)	1870	191	34700	3540	1.15		02 - 4B12DA - AV - 1957	127
0.077	0.770	1.54 (120Hz)	2170	221	30500	3110	0.99		02 - 4B12DA - AV - 2272	127
0.068	0.684	1.37 (120Hz)	2440	249	25400	2590	1.05		02 - 4B14DA - AV - 2559	127
0.068	0.684	1.37 (120Hz)	2440	249	65600	6690	1.91		02 - 4C14DA - AV - 2559	129
0.059	0.595	1.19 (120Hz)	2810	286	63500	6470	1.43		02 - 4C14DA - AV - 2944	129
0.050	0.499	0.997 (120Hz)	3350	341	59600	6080	1.39		02 - 4C14DA - AV - 3511	129
0.040	0.401	0.802 (120Hz)	4170	425	51700	5270	1.12		02 - 4C14DA - AV - 4365	129
0.034	0.338	0.676 (120Hz)	4940	504	40800	4160	1.04		02 - 4C16DA - AV - 5177	129
0.034	0.338	0.676 (120Hz)	4940	504	84500	8610	1.41		02 - 4D16DA - AV - 5177	131
0.024	0.242	0.484 (120Hz)	6900	703	68800	7010	1.04		02 - 4D16DA - AV - 7228	131
0.016	0.164	0.328 (120Hz)	10200	1040	85600	8730	1.05		02 - 4E17DA - AV - 10658	133

0.4 kW

Frequency	Hz	60Hz
Motor poles	P	4
Motor speed n_1	r/min	1750

IMPORTANT :
Please refer to page 54 for Gearmotor Selection Table notes.

Reduction ratio 179 ► 578

Base Frequency 60Hz									Model (refer to page 23)	Dimensional Drawing page
Output Speed n_2 [r/min]			Output Torque (at 60Hz)Tout		Allowable Radial Load of Output Shaft (at 60Hz) Pro		SF_G (At 60Hz)		Capacity Symbol - Frame Size - Suffix - Reduction Ratio	
At 6Hz	At 60Hz	Allowable Max Speed	N·m	kgf·m	N	kgf				
0.980	9.80	19.6 (120Hz)	359	36.6	26600	2710	1.40		05 - 4A100 - AV - 179	125
0.847	8.47	16.9 (120Hz)	416	42.4	26300	2680	1.29		05 - 4A100 - AV - 207	125
0.704	7.04	14.1 (120Hz)	500	51.0	25800	2630	1.09		05 - 4A100 - AV - 249	125
0.704	7.04	14.1 (120Hz)	500	51.0	25800	2630	1.40		05 - 4A105 - AV - 249	125
0.575	5.75	11.5 (120Hz)	613	62.5	25000	2550	1.08		05 - 4A100 - AV - 305	125
0.575	5.75	11.5 (120Hz)	613	62.5	25000	2550	1.41		05 - 4A105 - AV - 305	125
0.481	4.81	9.62 (120Hz)	695	70.8	23900	2440	1.86		05 - 4A12DB - AV - 364	125
0.413	4.13	8.26 (120Hz)	809	82.5	22500	2290	1.59		05 - 4A12DB - AV - 424	125
0.350	3.50	6.99 (120Hz)	956	97.5	42300	4310	2.24		05 - 4B12DB - AV - 501	127
0.303	3.03	6.06 (120Hz)	1100	112	17300	1760	1.17		05 - 4A12DB - AV - 578	125
0.303	3.03	6.06 (120Hz)	1100	112	41500	4230	1.94		05 - 4B12DB - AV - 578	127

Selection Table for Gearmotors: AF Motors

0.4 kW

Frequency	Hz	60Hz
Motor poles	P	4
Motor speed n_1	r/min	1750

IMPORTANT :
Please refer to page 54 for Gearmotor Selection Table notes.

Reduction ratio 683 ► 5177

Base Frequency 60Hz									Model (refer to page 23)	Dimensional Drawing page
Output Speed n_2 [r/min]			Output Torque (at 60Hz)Tout		Allowable Radial Load of Output Shaft (at 60Hz) Pro		SF_G (At 60Hz)		Capacity Symbol - Frame Size - Suffix - Reduction Ratio	
At 6Hz	At 60Hz	Allowable Max Speed	N·m	kgf·m	N	kgf				
0.256	2.56	5.13 (120Hz)	1300	133	10900	1110	0.99		05 - 4A12DB - AV - 683	125
0.256	2.56	5.13 (120Hz)	1300	133	40100	4090	1.65		05 - 4B12DB - AV - 683	127
0.216	2.16	4.33 (120Hz)	1540	157	38200	3890	1.39		05 - 4B12DB - AV - 809	127
0.183	1.83	3.66 (120Hz)	1830	187	35200	3590	1.18		05 - 4B12DB - AV - 956	127
0.157	1.57	3.13 (120Hz)	2130	217	31100	3170	1.21		05 - 4B14DB - AV - 1117	127
0.157	1.57	3.13 (120Hz)	2130	217	67100	6840	2.19		05 - 4C14DB - AV - 1117	129
0.133	1.33	2.65 (120Hz)	2520	257	23600	2410	1.02		05 - 4B14DB - AV - 1320	127
0.133	1.33	2.65 (120Hz)	2520	257	65200	6650	1.85		05 - 4C14DB - AV - 1320	129
0.106	1.06	2.11 (120Hz)	3160	322	61100	6230	1.48		05 - 4C14DB - AV - 1656	129
0.089	0.894	1.79 (120Hz)	3740	381	56200	5730	1.25		05 - 4C14DB - AV - 1957	129
0.077	0.770	1.54 (120Hz)	4340	442	87900	8960	1.65		05 - 4D16DA - AV - 2272	131
0.077	0.770	1.54 (120Hz)	4340	442	87900	8960	1.65		05 - 4D16DA - AV - 2272	131
0.068	0.684	1.37 (120Hz)	4890	498	41800	4260	1.05		05 - 4C16DA - AV - 2559	129
0.068	0.684	1.37 (120Hz)	4890	498	84800	8640	1.46		05 - 4D16DA - AV - 2559	131
0.059	0.595	1.19 (120Hz)	5620	573	80000	8150	1.27		05 - 4D16DA - AV - 2944	131
0.050	0.499	0.997 (120Hz)	6710	684	70800	7220	1.07		05 - 4D16DA - AV - 3511	131
0.050	0.499	0.997 (120Hz)	6710	684	70800	7220	1.30		05 - 4D17DA - AV - 3511	131
0.040	0.401	0.802 (120Hz)	8340	850	49600	5060	1.05		05 - 4D17DA - AV - 4365	131
0.040	0.401	0.802 (120Hz)	8340	850	89300	9100	1.28		05 - 4E17DA - AV - 4365	133
0.034	0.338	0.676 (120Hz)	9890	1010	86200	8790	1.08		05 - 4E17DA - AV - 5177	133

0.75 kW

Frequency	Hz	60Hz
Motor poles	P	4
Motor speed n_1	r/min	1750

IMPORTANT :
Please refer to page 54 for Gearmotor Selection Table notes.

Reduction ratio 112 ► 4365

Base Frequency 60Hz									Model (refer to page 23)	Dimensional Drawing page
Output Speed n_2 [r/min]			Output Torque (at 60Hz)Tout		Allowable Radial Load of Output Shaft (at 60Hz) Pro		SF_G (At 60Hz)		Capacity Symbol - Frame Size - Suffix - Reduction Ratio	
At 6Hz	At 60Hz	Allowable Max Speed	N·m	kgf·m	N	kgf				
1.56	15.6	31.3 (120Hz)	423	43.1	26300	2680	1.30		1 - 4A100 - AV - 112	125
1.43	14.3	28.6 (120Hz)	462	47.1	26000	2650	1.30		1 - 4A100 - AV - 123	125
1.16	11.6	23.3 (120Hz)	568	57.9	25300	2580	1.04		1 - 4A100 - AV - 151	125
1.16	11.6	23.3 (120Hz)	568	57.9	25300	2580	1.44		1 - 4A105 - AV - 151	125
0.980	9.80	19.6 (120Hz)	674	68.7	24400	2490	1.03		1 - 4A105 - AV - 179	125
0.980	9.80	19.6 (120Hz)	674	68.7	24400	2490	1.26		1 - 4A110 - AV - 179	125
0.847	8.47	16.9 (120Hz)	779	79.4	23400	2390	1.15		1 - 4A110 - AV - 207	125
0.847	8.47	16.9 (120Hz)	779	79.4	23400	2390	1.35		1 - 4A115 - AV - 207	125
0.704	7.04	14.1 (120Hz)	938	95.6	21300	2170	1.01		1 - 4A115 - AV - 249	125
0.575	5.75	11.5 (120Hz)	1150	117	41600	4240	1.26		1 - 4B120 - AV - 305	127
0.481	4.81	9.62 (120Hz)	1300	133	10900	1110	0.99		1 - 4A12DB - AV - 364	125
0.481	4.81	9.62 (120Hz)	1300	133	40100	4090	1.64		1 - 4B12DB - AV - 364	127
0.413	4.13	8.26 (120Hz)	1520	155	38400	3910	1.40		1 - 4B12DB - AV - 424	127
0.350	3.50	6.99 (120Hz)	1790	182	35600	3630	1.20		1 - 4B12DB - AV - 501	127
0.303	3.03	6.06 (120Hz)	2070	211	32000	3260	1.04		1 - 4B12DB - AV - 578	127
0.256	2.56	5.13 (120Hz)	2440	249	25300	2580	1.05		1 - 4B14DB - AV - 683	127
0.256	2.56	5.13 (120Hz)	2440	249	65600	6690	1.89		1 - 4C14DB - AV - 683	129
0.216	2.16	4.33 (120Hz)	2900	296	62900	6410	1.57		1 - 4C14DB - AV - 809	129
0.183	1.83	3.66 (120Hz)	3420	349	59000	6010	1.33		1 - 4C14DB - AV - 956	129
0.157	1.57	3.13 (120Hz)	4000	408	53600	5460	1.17		1 - 4C14DB - AV - 1117	129
0.157	1.57	3.13 (120Hz)	4000	408	53600	5460	1.29		1 - 4C16DA - AV - 1117	129
0.133	1.33	2.65 (120Hz)	4730	482	44400	4530	1.09		1 - 4C16DA - AV - 1320	129
0.133	1.33	2.65 (120Hz)	4730	482	85800	8750	1.51		1 - 4D16DA - AV - 1320	131
0.106	1.06	2.11 (120Hz)	5930	604	77600	7910	1.21		1 - 4D16DA - AV - 1656	131
0.089	0.894	1.79 (120Hz)	7010	715	67700	6900	1.02		1 - 4D16DA - AV - 1957	131
0.089	0.894	1.79 (120Hz)	7010	715	67700	6900	1.24		1 - 4D17DA - AV - 1957	131
0.077	0.770	1.54 (120Hz)	8130	829	52900	5390	1.07		1 - 4D17DA - AV - 2272	131
0.077	0.770	1.54 (120Hz)	8130	829	89700	9140	1.32		1 - 4E17DA - AV - 2272	133
0.068	0.684	1.37 (120Hz)	9160	934	87600	8930	1.17		1 - 4E17DA - AV - 2559	133
0.059	0.595	1.19 (120Hz)	10500	1070	84900	8650	1.02		1 - 4E17DA - AV - 2944	133
0.050	0.499	0.997 (120Hz)	12600	1280	122000	12400	1.35		1 - 4F18DA - AV - 3511	135
0.040	0.401	0.802 (120Hz)	15600	1590	116000	11800	1.09		1 - 4F18DA - AV - 4365	135

Selection Table for Gearmotors: AF Motors

1.5 kW

Frequency	Hz	60Hz
Motor poles	P	4
Motor speed n_1	r/min	1750

IMPORTANT :
Please refer to page 54 for Gearmotor Selection Table notes.

Reduction ratio 35 ► 2272

Base Frequency 60Hz									Model (refer to page 23)							Dimensional Drawing page
Output Speed n_2 [r/min]				Output Torque (at 60Hz)Tout		Allowable Radial Load of Output Shaft (at 60Hz) Pro		SF_G (At 60Hz)	Capacity Symbol	-	Frame Size	- Suffix -		Reduction Ratio		
At 6Hz	At 60Hz	Allowable Max Speed		N·m	kgf·m	N	kgf									
4.97	49.7	99.4	(120Hz)	266	27.1	23300	2380	1.57	2	-	4A100	- AV	-	35		125
4.55	45.5	90.9	(120Hz)	291	29.7	23900	2440	1.57	2	-	4A100	- AV	-	39		125
3.85	38.5	76.9	(120Hz)	343	35.0	24900	2540	1.57	2	-	4A100	- AV	-	46		125
3.33	33.3	66.7	(120Hz)	396	40.4	25800	2630	1.57	2	-	4A100	- AV	-	53		125
2.94	29.4	58.8	(120Hz)	449	45.8	26100	2660	1.33	2	-	4A100	- AV	-	60		125
2.60	26.0	52.1	(120Hz)	507	51.7	25700	2620	1.29	2	-	4A100	- AV	-	67		125
2.38	23.8	47.6	(120Hz)	555	56.6	25400	2590	1.29	2	-	4A100	- AV	-	74		125
2.19	21.9	43.8	(120Hz)	604	61.6	25000	2550	1.11	2	-	4A105	- AV	-	80		125
2.19	21.9	43.8	(120Hz)	604	61.6	25000	2550	1.27	2	-	4A110	- AV	-	80		125
2.00	20.0	40.0	(120Hz)	660	67.3	24600	2510	1.11	2	-	4A105	- AV	-	88		125
2.00	20.0	40.0	(120Hz)	660	67.3	24600	2510	1.27	2	-	4A110	- AV	-	88		125
1.72	17.2	34.5	(120Hz)	766	78.1	23500	2400	1.06	2	-	4A105	- AV	-	102		125
1.72	17.2	34.5	(120Hz)	766	78.1	23500	2400	1.27	2	-	4A110	- AV	-	102		125
1.56	15.6	31.3	(120Hz)	845	86.1	22600	2300	1.00	2	-	4A110	- AV	-	112		125
1.56	15.6	31.3	(120Hz)	845	86.1	22600	2300	1.21	2	-	4A115	- AV	-	112		125
1.43	14.3	28.6	(120Hz)	925	94.3	21500	2190	1.16	2	-	4A115	- AV	-	123		125
1.16	11.6	23.3	(120Hz)	1140	116	41600	4240	1.27	2	-	4B120	- AV	-	151		127
0.980	9.80	19.6	(120Hz)	1350	138	40300	4110	1.15	2	-	4B120	- AV	-	179		127
0.847	8.47	16.9	(120Hz)	1560	159	38700	3940	1.08	2	-	4B125	- AV	-	207		127
0.704	7.04	14.1	(120Hz)	1880	192	35800	3650	1.14	2	-	4B140	- AV	-	249		127
0.704	7.04	14.1	(120Hz)	1880	192	68600	6990	1.62	2	-	4C140	- AV	-	249		129
0.575	5.75	11.5	(120Hz)	2300	234	66900	6820	1.32	2	-	4C140	- AV	-	305		129
0.481	4.81	9.62	(120Hz)	2610	266	21300	2170	0.99	2	-	4B14DC	- AV	-	364		127
0.481	4.81	9.62	(120Hz)	2610	266	64700	6600	1.79	2	-	4C14DC	- AV	-	364		129
0.413	4.13	8.26	(120Hz)	3030	309	62000	6320	1.45	2	-	4C14DC	- AV	-	424		129
0.350	3.50	6.99	(120Hz)	3580	365	57600	5870	1.30	2	-	4C14DC	- AV	-	501		129
0.303	3.03	6.06	(120Hz)	4140	422	52100	5310	1.12	2	-	4C14DC	- AV	-	578		129
0.303	3.03	6.06	(120Hz)	4140	422	52100	5310	1.24	2	-	4C16DB	- AV	-	578		129
0.303	3.03	6.06	(120Hz)	4140	422	88900	9060	1.73	2	-	4D16DB	- AV	-	578		131
0.256	2.56	5.13	(120Hz)	4890	498	41800	4260	1.05	2	-	4C16DB	- AV	-	683		129
0.256	2.56	5.13	(120Hz)	4890	498	84800	8640	1.46	2	-	4D16DB	- AV	-	683		131
0.216	2.16	4.33	(120Hz)	5790	590	78700	8020	1.23	2	-	4D16DB	- AV	-	809		131
0.183	1.83	3.66	(120Hz)	6840	697	69400	7070	1.27	2	-	4D17DB	- AV	-	956		131
0.183	1.83	3.66	(120Hz)	6840	697	92200	9400	1.56	2	-	4E17DB	- AV	-	956		133
0.157	1.57	3.13	(120Hz)	8000	815	55100	5620	1.09	2	-	4D17DB	- AV	-	1117		131
0.157	1.57	3.13	(120Hz)	8000	815	89900	9160	1.34	2	-	4E17DB	- AV	-	1117		133
0.133	1.33	2.65	(120Hz)	9450	963	87000	8870	1.13	2	-	4E17DB	- AV	-	1320		133
0.106	1.06	2.11	(120Hz)	11900	1210	123000	12500	1.43	2	-	4F18DA	- AV	-	1656		135
0.089	0.894	1.79	(120Hz)	14000	1430	119000	12100	1.21	2	-	4F18DA	- AV	-	1957		135
0.077	0.770	1.54	(120Hz)	16300	1660	115000	11700	1.05	2	-	4F18DA	- AV	-	2272		135

2.2 kW

Frequency	Hz	60Hz
Motor poles	P	4
Motor speed n_1	r/min	1750

IMPORTANT :
Please refer to page 54 for Gearmotor Selection Table notes.

Reduction ratio 11 ► 39

Base Frequency 60Hz									Model (refer to page 23)							Dimensional Drawing page
Output Speed n_2 [r/min]				Output Torque (at 60Hz)Tout		Allowable Radial Load of Output Shaft (at 60Hz) Pro		SF_G (At 60Hz)	Capacity Symbol	-	Frame Size	- Suffix -		Reduction Ratio		
At 6Hz	At 60Hz	Allowable Max Speed		N·m	kgf·m	N	kgf									
16.7	167	333	(120Hz)	116	11.8	16600	1690	4.36	3	-	4A120	- AV	-	11		125
13.7	137	273	(120Hz)	142	14.5	17500	1780	4.36	3	-	4A120	- AV	-	13		125
12.5	125	250	(120Hz)	155	15.8	17900	1820	4.36	3	-	4A120	- AV	-	14		125
10.9	109	219	(120Hz)	177	18.0	18600	1900	4.36	3	-	4A120	- AV	-	16		125
10.0	100	200	(120Hz)	194	19.8	19000	1940	4.36	3	-	4A120	- AV	-	18		125
8.33	83.3	167	(120Hz)	232	23.6	19900	2030	1.61	3	-	4A110	- AV	-	21		125
7.81	78.1	156	(120Hz)	248	25.3	20300	2070	2.97	3	-	4A120	- AV	-	22		125
7.14	71.4	143	(120Hz)	271	27.6	20700	2110	2.97	3	-	4A120	- AV	-	25		125
6.25	62.5	125	(120Hz)	310	31.6	21400	2180	1.61	3	-	4A110	- AV	-	28		125
4.97	49.7	99.4	(120Hz)	390	39.8	22600	2300	1.61	3	-	4A110	- AV	-	35		125
4.55	45.5	90.9	(120Hz)	426	43.4	23100	2350	1.61	3	-	4A110	- AV	-	39		125

Selection Table for Gearmotors: AF Motors

2.2 kW

Frequency	Hz	60Hz
Motor poles	P	4
Motor speed n_1	r/min	1750

IMPORTANT :
Please refer to page 54 for Gearmotor Selection Table notes.

Reduction ratio 46 ► 956

Base Frequency 60Hz									Model (refer to page 23)	Dimensional Drawing page
Output Speed n_2 [r/min]				Output Torque (at 60Hz)Tout		Allowable Radial Load of Output Shaft (at 60Hz) Pro		SF_G (At 60Hz)	Capacity Symbol - Frame Size - Suffix - Reduction Ratio	
At 6Hz	At 60Hz	Allowable Max Speed		N·m	kgf·m	N	kgf			
3.85	38.5	76.9	(120Hz)	504	51.4	24000	2450	1.61	3 - 4A110 - AV - 46	125
3.33	33.3	66.7	(120Hz)	581	59.2	24800	2530	1.61	3 - 4A110 - AV - 53	125
2.94	29.4	58.8	(120Hz)	659	67.2	24600	2510	1.45	3 - 4A110 - AV - 60	125
2.60	26.0	52.1	(120Hz)	744	75.8	23800	2430	1.24	3 - 4A110 - AV - 67	125
2.38	23.8	47.6	(120Hz)	814	83.0	23000	2340	1.24	3 - 4A110 - AV - 74	125
2.19	21.9	43.8	(120Hz)	886	90.3	22100	2250	1.01	3 - 4A115 - AV - 80	125
2.19	21.9	43.8	(120Hz)	886	90.3	38900	3970	1.40	3 - 4B120 - AV - 80	127
2.00	20.0	40.0	(120Hz)	969	98.8	20900	2130	1.01	3 - 4A115 - AV - 88	125
2.00	20.0	40.0	(120Hz)	969	98.8	39800	4060	1.40	3 - 4B120 - AV - 88	127
1.72	17.2	34.5	(120Hz)	1120	114	41100	4190	1.36	3 - 4B120 - AV - 102	127
1.56	15.6	31.3	(120Hz)	1240	126	41000	4180	1.13	3 - 4B120 - AV - 112	127
1.56	15.6	31.3	(120Hz)	1240	126	41000	4180	1.45	3 - 4B125 - AV - 112	127
1.43	14.3	28.6	(120Hz)	1360	139	40300	4110	1.13	3 - 4B120 - AV - 123	127
1.43	14.3	28.6	(120Hz)	1360	139	40300	4110	1.45	3 - 4B125 - AV - 123	127
1.16	11.6	23.3	(120Hz)	1670	170	37800	3850	1.08	3 - 4B125 - AV - 151	127
0.980	9.80	19.6	(120Hz)	1980	202	34600	3530	1.08	3 - 4B140 - AV - 179	127
0.980	9.80	19.6	(120Hz)	1980	202	67300	6860	1.56	3 - 4C140 - AV - 179	129
0.847	8.47	16.9	(120Hz)	2290	233	67000	6830	1.35	3 - 4C140 - AV - 207	129
0.704	7.04	14.1	(120Hz)	2750	280	64700	6600	1.10	3 - 4C140 - AV - 249	129
0.704	7.04	14.1	(120Hz)	2750	280	64700	6600	1.38	3 - 4C145 - AV - 249	129
0.575	5.75	11.5	(120Hz)	3370	344	60800	6200	1.13	3 - 4C145 - AV - 305	129
0.481	4.81	9.62	(120Hz)	3820	389	55400	5650	1.34	3 - 4C16DC - AV - 364	129
0.481	4.81	9.62	(120Hz)	3820	389	90300	9200	1.87	3 - 4D16DC - AV - 364	131
0.413	4.13	8.26	(120Hz)	4450	454	48300	4920	1.16	3 - 4C16DC - AV - 424	129
0.413	4.13	8.26	(120Hz)	4450	454	87300	8900	1.60	3 - 4D16DC - AV - 424	131
0.350	3.50	6.99	(120Hz)	5260	536	82500	8410	1.66	3 - 4D17DC - AV - 501	131
0.303	3.03	6.06	(120Hz)	6070	619	76500	7800	1.44	3 - 4D17DC - AV - 578	131
0.183	1.83	3.66	(120Hz)	10000	1020	85900	8760	1.16	3 - 4E18DA - AV - 956	133
0.183	1.83	3.66	(120Hz)	10000	1020	126000	12800	1.45	3 - 4F18DA - AV - 956	135
0.183	1.83	3.66	(120Hz)	10000	1020	126000	12800	1.70	3 - 4F18DB - AV - 956	135

3.7 kW

Frequency	Hz	60Hz
Motor poles	P	4
Motor speed n_1	r/min	1750

IMPORTANT :
Please refer to page 54 for Gearmotor Selection Table notes.

Reduction ratio 11 ►88

Base Frequency 60Hz									Model (refer to page 23)	Dimensional Drawing page
Output Speed n_2 [r/min]				Output Torque (at 60Hz)Tout		Allowable Radial Load of Output Shaft (at 60Hz) Pro		SF_G (At 60Hz)	Capacity Symbol - Frame Size - Suffix - Reduction Ratio	
At 6Hz	At 60Hz	Allowable Max Speed		N·m	kgf·m	N	kgf			
16.7	167	333	(120Hz)	195	19.9	16200	1650	2.59	5 - 4A120 - AV - 11	125
13.7	137	273	(120Hz)	238	24.3	17000	1730	2.59	5 - 4A120 - AV - 13	125
12.5	125	250	(120Hz)	261	26.6	17400	1770	2.59	5 - 4A120 - AV - 14	125
10.9	109	219	(120Hz)	298	30.4	17900	1820	2.59	5 - 4A120 - AV - 16	125
10.0	100	200	(120Hz)	326	33.2	18300	1870	2.59	5 - 4A120 - AV - 18	125
8.33	83.3	167	(120Hz)	391	39.9	19100	1950	1.77	5 - 4A120 - AV - 21	125
7.81	78.1	156	(120Hz)	417	42.5	19300	1970	1.77	5 - 4A120 - AV - 22	125
7.14	71.4	143	(120Hz)	456	46.5	19700	2010	1.77	5 - 4A120 - AV - 25	125
6.25	62.5	125	(120Hz)	521	53.1	20300	2070	1.77	5 - 4A120 - AV - 28	125
4.97	49.7	99.4	(120Hz)	655	66.8	21200	2160	1.37	5 - 4A120 - AV - 35	125
4.55	45.5	90.9	(120Hz)	717	73.1	21600	2200	1.37	5 - 4A120 - AV - 39	125
3.85	38.5	76.9	(120Hz)	847	86.3	22200	2260	1.26	5 - 4A120 - AV - 46	125
3.33	33.3	66.7	(120Hz)	977	100	20700	2110	1.09	5 - 4A120 - AV - 53	125
3.33	33.3	66.7	(120Hz)	977	100	33500	3410	1.37	5 - 4B120 - AV - 53	127
2.94	29.4	58.8	(120Hz)	1110	113	34400	3510	1.37	5 - 4B120 - AV - 60	127
2.60	26.0	52.1	(120Hz)	1250	127	35200	3590	1.07	5 - 4B120 - AV - 67	127
2.60	26.0	52.1	(120Hz)	1250	127	35200	3590	1.32	5 - 4B125 - AV - 67	127
2.38	23.8	47.6	(120Hz)	1370	140	35800	3650	1.07	5 - 4B120 - AV - 74	127
2.38	23.8	47.6	(120Hz)	1370	140	35800	3650	1.32	5 - 4B125 - AV - 74	127
2.19	21.9	43.8	(120Hz)	1490	152	36300	3700	1.07	5 - 4B125 - AV - 80	127
2.00	20.0	40.0	(120Hz)	1630	166	36900	3760	1.07	5 - 4B125 - AV - 88	127

Selection Table for Gearmotors: AF Motors

3.7 kW

Frequency	Hz	60Hz
Motor poles	P	4
Motor speed n_1	r/min	1750

IMPORTANT :
Please refer to page 54 for Gearmotor Selection Table notes.

Reduction ratio 102 ► 956

Base Frequency 60Hz									Model (refer to page 23)	Dimensional Drawing page
Output Speed n_2 [r/min]				Output Torque (at 60Hz)Tout		Allowable Radial Load of Output Shaft (at 60Hz) Pro		SF_G (At 60Hz)	Capacity Symbol - Frame Size - Suffix - Reduction Ratio	
At 6Hz	At 60Hz	Allowable Max Speed		N·m	kgf·m	N	kgf			
1.72	17.2	34.5	(120Hz)	1890	193	35600	3630	1.02	5 - 4B125 - AV - 102	127
1.56	15.6	31.3	(120Hz)	2090	213	33300	3390	1.02	5 - 4B140 - AV - 112	127
1.56	15.6	31.3	(120Hz)	2090	213	57100	5820	1.41	5 - 4C140 - AV - 112	129
1.43	14.3	28.6	(120Hz)	2280	232	58200	5930	1.41	5 - 4C140 - AV - 123	129
1.16	11.6	23.3	(120Hz)*	2800	285	60500	6170	1.06	5 - 4C140 - AV - 151	129
1.16	11.6	23.3	(120Hz)*	2800	285	60500	6170	1.46	5 - 4C145 - AV - 151	129
0.980	9.80	19.6	(120Hz)	3320	338	61100	6230	1.14	5 - 4C145 - AV - 179	129
0.847	8.47	16.9	(120Hz)	3840	391	57100	5820	1.11	5 - 4C160 - AV - 207	129
0.847	8.47	16.9	(120Hz)	3840	391	91100	9290	1.19	5 - 4D160 - AV - 207	131
0.704	7.04	14.1	(120Hz)*	4630	472	87600	8930	1.53	5 - 4D165 - AV - 249	131
0.575	5.75	11.5	(120Hz)	5670	578	81700	8330	1.05	5 - 4D165 - AV - 305	131
0.481	4.81	9.62	(120Hz)	6430	655	73400	7480	1.11	5 - 4D16DC - AV - 364	131
0.481	4.81	9.62	(120Hz)	6430	655	73400	7480	1.36	5 - 4D17DC - AV - 364	131
0.413	4.13	8.26	(120Hz)	7480	762	62100	6330	1.17	5 - 4D17DC - AV - 424	131
0.413	4.13	8.26	(120Hz)	7480	762	91000	9280	1.43	5 - 4E17DC - AV - 424	133
0.350	3.50	6.99	(120Hz)	8840	901	39400	4020	0.99	5 - 4D17DC - AV - 501	131
0.350	3.50	6.99	(120Hz)	8840	901	88200	8990	1.21	5 - 4E17DC - AV - 501	133
0.303	3.03	6.06	(120Hz)	10200	1040	85500	8720	1.05	5 - 4E17DC - AV - 578	133
0.256	2.56	5.13	(120Hz)	12100	1230	123000	12500	1.39	5 - 4F18DB - AV - 683	135
0.216	2.16	4.33	(120Hz)	14300	1460	119000	12100	1.19	5 - 4F18DB - AV - 809	135
0.183	1.83	3.66	(120Hz)	16900	1720	114000	11600	1.01	5 - 4F18DB - AV - 956	135

5.5 kW

Frequency	Hz	60Hz
Motor poles	P	4
Motor speed n_1	r/min	1750

IMPORTANT :
Please refer to page 54 for Gearmotor Selection Table notes.

Reduction ratio 11 ► 179

Base Frequency 60Hz									Model (refer to page 23)	Dimensional Drawing page
Output Speed n_2 [r/min]				Output Torque (at 60Hz)Tout		Allowable Radial Load of Output Shaft (at 60Hz) Pro		SF_G (At 60Hz)	Capacity Symbol - Frame Size - Suffix - Reduction Ratio	
At 6Hz	At 60Hz	Allowable Max Speed		N·m	kgf·m	N	kgf			
16.7	167	333	(120Hz)	291	29.7	15600	1590	3.45	8 - 4A140 - AV - 11	125
13.7	137	273	(120Hz)	354	36.1	16300	1660	3.02	8 - 4A140 - AV - 13	125
12.5	125	250	(120Hz)	387	39.4	16700	1700	2.76	8 - 4A140 - AV - 14	125
10.9	109	219	(120Hz)	443	45.2	17100	1740	2.41	8 - 4A140 - AV - 16	125
10.0	100	200	(120Hz)	484	49.3	17500	1780	2.21	8 - 4A140 - AV - 18	125
8.33	83.3	167	(120Hz)	581	59.2	18100	1850	1.84	8 - 4A140 - AV - 21	125
7.81	78.1	156	(120Hz)	620	63.2	18200	1860	1.72	8 - 4A140 - AV - 22	125
7.14	71.4	143	(120Hz)	678	69.1	18500	1890	1.58	8 - 4A140 - AV - 25	125
6.25	62.5	125	(120Hz)	775	79.0	18900	1930	1.38	8 - 4A140 - AV - 28	125
4.97	49.7	99.4	(120Hz)	974	99.3	19500	1990	1.10	8 - 4A140 - AV - 35	125
4.97	49.7	99.4	(120Hz)	974	99.3	29200	2980	2.19	8 - 4B140 - AV - 35	127
4.55	45.5	90.9	(120Hz)	1070	109	19200	1960	1.00	8 - 4A140 - AV - 39	125
4.55	45.5	90.9	(120Hz)	1070	109	29800	3040	2.00	8 - 4B140 - AV - 39	127
3.85	38.5	76.9	(120Hz)	1260	128	30700	3130	1.69	8 - 4B140 - AV - 46	127
3.33	33.3	66.7	(120Hz)	1450	148	31500	3210	1.47	8 - 4B140 - AV - 53	127
2.94	29.4	58.8	(120Hz)	1650	168	32100	3270	1.29	8 - 4B140 - AV - 60	127
2.60	26.0	52.1	(120Hz)	1860	190	32600	3320	1.15	8 - 4B140 - AV - 67	127
2.60	26.0	52.1	(120Hz)	1860	190	48700	4960	1.57	8 - 4C140 - AV - 67	129
2.38	23.8	47.6	(120Hz)	2030	207	33000	3360	1.05	8 - 4B140 - AV - 74	127
2.38	23.8	47.6	(120Hz)	2030	207	49600	5060	1.57	8 - 4C140 - AV - 74	129
2.19	21.9	43.8	(120Hz)	2210	225	50400	5140	1.25	8 - 4C140 - AV - 80	129
2.00	20.0	40.0	(120Hz)	2420	247	51300	5230	1.25	8 - 4C140 - AV - 88	129
1.72	17.2	34.5	(120Hz)	2810	286	52600	5360	1.08	8 - 4C140 - AV - 102	129
1.72	17.2	34.5	(120Hz)	2810	286	52600	5360	1.37	8 - 4C145 - AV - 102	129
1.56	15.6	31.3	(120Hz)*	3100	316	53300	5430	1.37	8 - 4C145 - AV - 112	129
1.43	14.3	28.6	(120Hz)	3390	346	54000	5500	1.26	8 - 4C145 - AV - 123	129
1.16	11.6	23.3	(120Hz)*	4160	424	54100	5510	1.02	8 - 4C160 - AV - 151	129
1.16	11.6	23.3	(120Hz)*	4160	424	89200	9090	1.35	8 - 4D160 - AV - 151	131
0.980	9.80	19.6	(120Hz)*	4940	504	86000	8770	1.05	8 - 4D160 - AV - 179	131
0.980	9.80	19.6	(120Hz)*	4940	504	86000	8770	1.37	8 - 4D165 - AV - 179	131

Selection Table for Gearmotors: AF Motors

5.5 kW

Frequency	Hz	60Hz
Motor poles	P	4
Motor speed n_1	r/min	1750

IMPORTANT :
Please refer to page 54 for Gearmotor Selection Table notes.

Reduction ratio 207 ► 578

Base Frequency 60Hz									Model (refer to page 23)						Dimensional Drawing page
Output Speed n_2 [r/min]				Output Torque (at 60Hz)Tout		Allowable Radial Load of Output Shaft (at 60Hz) Pro		SF_G (At 60Hz)	Capacity Symbol	-	Frame Size	- Suffix -	Reduction Ratio		
At 6Hz	At 60Hz	Allowable Max Speed		N·m	kgf·m	N	kgf								
0.847	8.47	16.9	(120Hz)*	5710	582	81400	8300	1.05	8	-	4D165	- AV -	207		131
0.847	8.47	16.9	(120Hz)*	5710	582	81400	8300	1.26	8	-	4D170	- AV -	207		131
0.704	7.04	14.1	(120Hz)*	6880	701	72500	7390	1.03	8	-	4D165	- AV -	249		131
0.704	7.04	14.1	(120Hz)*	6880	701	92200	9400	1.30	8	-	4E175	- AV -	249		133
0.575	5.75	11.5	(120Hz)*	8430	859	89100	9080	1.02	8	-	4E175	- AV -	305		133
0.350	3.50	6.99	(120Hz)	13100	1340	121000	12300	1.27	8	-	4F18DB	- AV -	501		135
0.303	3.03	6.06	(120Hz)	15200	1550	117000	11900	1.10	8	-	4F18DB	- AV -	578		135

7.5 kW

Frequency	Hz	60Hz
Motor poles	P	4
Motor speed n_1	r/min	1750

IMPORTANT :
Please refer to page 54 for Gearmotor Selection Table notes.

Reduction ratio 11 ► 424

Base Frequency 60Hz									Model (refer to page 23)						Dimensional Drawing page
Output Speed n_2 [r/min]				Output Torque (at 60Hz)Tout		Allowable Radial Load of Output Shaft (at 60Hz) Pro		SF_G (At 60Hz)	Capacity Symbol	-	Frame Size	- Suffix -	Reduction Ratio		
At 6Hz	At 60Hz	Allowable Max Speed		N·m	kgf·m	N	kgf								
16.7	167	333	(120Hz)	396	40.4	15100	1540	2.53	10	-	4A140	- AV -	11		125
13.7	137	273	(120Hz)	483	49.2	15600	1590	2.21	10	-	4A140	- AV -	13		125
12.5	125	250	(120Hz)	528	53.8	15900	1620	2.02	10	-	4A140	- AV -	14		125
10.9	109	219	(120Hz)	604	61.6	16300	1660	1.77	10	-	4A140	- AV -	16		125
10.0	100	200	(120Hz)	660	67.3	16500	1680	1.62	10	-	4A140	- AV -	18		125
8.33	83.3	167	(120Hz)	792	80.7	16900	1720	1.35	10	-	4A140	- AV -	21		125
7.81	78.1	156	(120Hz)	845	86.1	17000	1730	1.26	10	-	4A140	- AV -	22		125
7.14	71.4	143	(120Hz)	925	94.3	17200	1750	1.16	10	-	4A140	- AV -	25		125
7.14	71.4	143	(120Hz)	925	94.3	26000	2650	1.73	10	-	4B140	- AV -	25		127
6.25	62.5	125	(120Hz)	1060	108	17400	1770	1.01	10	-	4A140	- AV -	28		125
6.25	62.5	125	(120Hz)	1060	108	26700	2720	1.73	10	-	4B140	- AV -	28		127
4.97	49.7	99.4	(120Hz)	1330	136	27700	2820	1.60	10	-	4B140	- AV -	35		127
4.55	45.5	90.9	(120Hz)	1450	148	28100	2860	1.47	10	-	4B140	- AV -	39		127
3.85	38.5	76.9	(120Hz)	1720	175	28800	2940	1.24	10	-	4B140	- AV -	46		127
3.33	33.3	66.7	(120Hz)	1980	202	29200	2980	1.07	10	-	4B140	- AV -	53		127
3.33	33.3	66.7	(120Hz)	1980	202	44300	4520	1.60	10	-	4C140	- AV -	53		129
2.94	29.4	58.8	(120Hz)	2250	229	45300	4620	1.35	10	-	4C140	- AV -	60		129
2.60	26.0	52.1	(120Hz)	2540	259	46200	4710	1.15	10	-	4C140	- AV -	67		129
2.60	26.0	52.1	(120Hz)	2540	259	46200	4710	1.47	10	-	4C145	- AV -	67		129
2.38	23.8	47.6	(120Hz)	2770	282	46900	4780	1.15	10	-	4C140	- AV -	74		129
2.38	23.8	47.6	(120Hz)	2770	282	46900	4780	1.47	10	-	4C145	- AV -	74		129
2.19	21.9	43.8	(120Hz)	3020	308	47300	4820	1.05	10	-	4C145	- AV -	80		129
2.19	21.9	43.8	(120Hz)	3020	308	47300	4820	1.31	10	-	4C160	- AV -	80		129
2.00	20.0	40.0	(120Hz)	3300	336	48000	4890	1.05	10	-	4C145	- AV -	88		129
2.00	20.0	40.0	(120Hz)	3300	336	48000	4890	1.29	10	-	4C160	- AV -	88		129
1.72	17.2	34.5	(120Hz)	3830	390	48700	4960	1.00	10	-	4C145	- AV -	102		129
1.72	17.2	34.5	(120Hz)*	3830	390	78800	8030	1.40	10	-	4D160	- AV -	102		131
1.56	15.6	31.3	(120Hz)*	4230	431	49000	4990	1.00	10	-	4C145	- AV -	112		129
1.56	15.6	31.3	(120Hz)*	4230	431	80200	8180	1.29	10	-	4D160	- AV -	112		131
1.43	14.3	28.6	(120Hz)*	4620	471	81600	8320	1.29	10	-	4D160	- AV -	123		131
1.16	11.6	23.3	(120Hz)*	5680	579	81600	8320	1.05	10	-	4D165	- AV -	151		131
1.16	11.6	23.3	(120Hz)*	5680	579	81600	8320	1.27	10	-	4D170	- AV -	151		131
0.980	9.80	19.6	(120Hz)*	6740	687	73700	7510	1.00	10	-	4D165	- AV -	179		131
0.980	9.80	19.6	(120Hz)*	6740	687	73700	7510	1.07	10	-	4D170	- AV -	179		131
0.847	8.47	16.9	(120Hz)*	7790	794	63200	6440	1.12	10	-	4D180	- AV -	207		131
0.847	8.47	16.9	(120Hz)*	7790	794	90300	9200	1.11	10	-	4E175	- AV -	207		133
0.847	8.47	16.9	(120Hz)*	7790	794	90300	9200	1.30	10	-	4E180	- AV -	207		133
0.847	8.47	16.9	(120Hz)*	7790	794	130000	13300	1.30	10	-	4F180	- AV -	207		135
0.704	7.04	14.1	(120Hz)*	9380	956	87200	8890	1.17	10	-	4E180	- AV -	249		133
0.704	7.04	14.1	(120Hz)*	9380	956	87200	8890	1.24	10	-	4E185	- AV -	249		133
0.704	7.04	14.1	(120Hz)*	9380	956	127000	12900	1.17	10	-	4F180	- AV -	249		135
0.704	7.04	14.1	(120Hz)*	9380	956	127000	12900	1.31	10	-	4F185	- AV -	249		135
0.575	5.75	11.5	(120Hz)*	11500	1170	83000	8460	1.01	10	-	4E185	- AV -	305		133
0.575	5.75	11.5	(120Hz)*	11500	1170	124000	12600	1.15	10	-	4F185	- AV -	305		135
0.481	4.81	9.62	(120Hz)	13000	1330	121000	12300	1.28	10	-	4F18DB	- AV -	364		135
0.413	4.13	8.26	(120Hz)	15200	1550	117000	11900	1.08	10	-	4F18DB	- AV -	424		135

Selection Table for Gearmotors: AF Motors

11 kW

Frequency	Hz	60Hz
Motor poles	P	4
Motor speed n_1	r/min	1750

IMPORTANT :
Please refer to page 54 for Gearmotor Selection Table notes.

Reduction ratio 11 ► 305

Base Frequency 60Hz									Model (refer to page 23)								Dimensional Drawing page
Output Speed n_2 [r/min]				Output Torque (at 60Hz)Tout		Allowable Radial Load of Output Shaft (at 60Hz) Pro		SF_G (At 60Hz)	Capacity Symbol	-	Frame Size	-	Suffix	-	Reduction Ratio		
At 6Hz	At 60Hz	Allowable Max Speed		N·m	kgf·m	N	kgf										
16.7	167	333	(120Hz)	581	59.2	14100	1440	1.73	15	-	4A140	-	AV	-	11		125
13.7	137	273	(120Hz)	708	72.2	14400	1470	1.51	15	-	4A145	-	AV	-	13		125
12.5	125	250	(120Hz)	775	79.0	14600	1490	1.38	15	-	4A140	-	AV	-	14		125
10.9	109	219	(120Hz)	886	90.3	14700	1500	1.21	15	-	4A140	-	AV	-	16		125
10.9	109	219	(120Hz)	886	90.3	22600	2300	1.73	15	-	4B140	-	AV	-	16		127
10.0	100	200	(120Hz)	969	98.8	14800	1510	1.10	15	-	4A140	-	AV	-	18		125
10.0	100	200	(120Hz)	969	98.8	23000	2340	1.73	15	-	4B140	-	AV	-	18		127
8.33	83.3	167	(120Hz)	1160	118	23700	2420	1.18	15	-	4B140	-	AV	-	21		127
8.33	83.3	167	(120Hz)	1160	118	23700	2420	1.37	15	-	4B145	-	AV	-	21		127
7.81	78.1	156	(120Hz)	1240	126	23800	2430	1.18	15	-	4B140	-	AV	-	22		127
7.81	78.1	156	(120Hz)	1240	126	23800	2430	1.37	15	-	4B145	-	AV	-	22		127
7.14	71.4	143	(120Hz)	1360	139	24200	2470	1.18	15	-	4B140	-	AV	-	25		127
7.14	71.4	143	(120Hz)	1360	139	24200	2470	1.37	15	-	4B145	-	AV	-	25		127
6.25	62.5	125	(120Hz)	1550	158	24600	2510	1.18	15	-	4B140	-	AV	-	28		127
6.25	62.5	125	(120Hz)	1550	158	24600	2510	1.37	15	-	4B145	-	AV	-	28		127
4.97	49.7	99.4	(120Hz)	1950	199	25000	2550	1.09	15	-	4B140	-	AV	-	35		127
4.97	49.7	99.4	(120Hz)	1950	199	38600	3930	1.37	15	-	4C145	-	AV	-	35		129
4.55	45.5	90.9	(120Hz)	2130	217	25200	2570	1.00	15	-	4B140	-	AV	-	39		127
4.55	45.5	90.9	(120Hz)	2130	217	39200	4000	1.37	15	-	4C145	-	AV	-	39		129
3.85	38.5	76.9	(120Hz)	2520	257	40200	4100	1.18	15	-	4C140	-	AV	-	46		129
3.85	38.5	76.9	(120Hz)	2520	257	40200	4100	1.37	15	-	4C145	-	AV	-	46		129
3.33	33.3	66.7	(120Hz)	2910	297	40900	4170	1.09	15	-	4C140	-	AV	-	53		129
3.33	33.3	66.7	(120Hz)	2910	297	40900	4170	1.33	15	-	4C145	-	AV	-	53		129
2.94	29.4	58.8	(120Hz)	3290	335	41400	4220	1.09	15	-	4C145	-	AV	-	60		129
2.60	26.0	52.1	(120Hz)	3720	379	41700	4250	1.00	15	-	4C145	-	AV	-	67		129
2.60	26.0	52.1	(120Hz)	3720	379	68500	6980	1.46	15	-	4D165	-	AV	-	67		131
2.38	23.8	47.6	(120Hz)	4070	415	42000	4280	1.00	15	-	4C145	-	AV	-	74		129
2.38	23.8	47.6	(120Hz)*	4070	415	69700	7100	1.46	15	-	4D165	-	AV	-	74		131
2.19	21.9	43.8	(120Hz)*	4430	452	70600	7200	1.37	15	-	4D165	-	AV	-	80		131
2.00	20.0	40.0	(120Hz)*	4840	493	71700	7310	1.37	15	-	4D165	-	AV	-	88		131
1.72	17.2	34.5	(120Hz)*	5620	573	73200	7460	1.04	15	-	4D165	-	AV	-	102		131
1.72	17.2	34.5	(120Hz)*	5620	573	73200	7460	1.29	15	-	4D170	-	AV	-	102		131
1.56	15.6	31.3	(120Hz)*	6200	632	73900	7530	1.04	15	-	4D165	-	AV	-	112		131
1.56	15.6	31.3	(120Hz)*	6200	632	93500	9530	1.37	15	-	4E175	-	AV	-	112		133
1.43	14.3	28.6	(120Hz)*	6780	691	73300	7470	1.04	15	-	4D165	-	AV	-	123		131
1.43	14.3	28.6	(120Hz)*	6780	691	92400	9420	1.37	15	-	4E175	-	AV	-	123		133
1.16	11.6	23.3	(120Hz)*	8330	849	56400	5750	1.05	15	-	4D180	-	AV	-	151		131
1.16	11.6	23.3	(120Hz)*	8330	849	89300	9100	1.03	15	-	4E175	-	AV	-	151		133
1.16	11.6	23.3	(120Hz)*	8330	849	89300	9100	1.37	15	-	4E180	-	AV	-	151		133
1.16	11.6	23.3	(120Hz)*	8330	849	129000	13100	1.37	15	-	4F180	-	AV	-	151		135
0.980	9.80	19.6	(120Hz)*	9880	1010	86200	8790	1.09	15	-	4E180	-	AV	-	179		133
0.980	9.80	19.6	(120Hz)*	9880	1010	86200	8790	1.17	15	-	4E185	-	AV	-	179		133
0.980	9.80	19.6	(120Hz)*	9880	1010	126000	12800	1.09	15	-	4F180	-	AV	-	179		135
0.980	9.80	19.6	(120Hz)*	9880	1010	126000	12800	1.37	15	-	4F185	-	AV	-	179		135
0.847	8.47	16.9	(120Hz)*	11400	1160	83100	8470	1.01	15	-	4E185	-	AV	-	207		133
0.847	8.47	16.9	(120Hz)*	11400	1160	124000	12600	1.09	15	-	4F185	-	AV	-	207		135
0.847	8.47	16.9	(120Hz)*	11400	1160	124000	12600	1.39	15	-	4F190	-	AV	-	207		135
0.704	7.04	14.1	(120Hz)*	13800	1410	120000	12200	1.23	15	-	4F190	-	AV	-	249		135
0.575	5.75	11.5	(120Hz)*	16900	1720	114000	11600	1.07	15	-	4F190	-	AV	-	305		135

15 kW

Frequency	Hz	60Hz
Motor poles	P	4
Motor speed n_1	r/min	1750

IMPORTANT :
Please refer to page 54 for Gearmotor Selection Table notes.

Reduction ratio 11 ► 13

Base Frequency 60Hz									Model (refer to page 23)								Dimensional Drawing page
Output Speed n_2 [r/min]				Output Torque (at 60Hz)Tout		Allowable Radial Load of Output Shaft (at 60Hz) Pro		SF_G (At 60Hz)	Capacity Symbol	-	Frame Size	-	Suffix	-	Reduction Ratio		
At 6Hz	At 60Hz	Allowable Max Speed		N·m	kgf·m	N	kgf										
16.7	167	333	(120Hz)*	792	80.7	19900	2030	1.69	20	-	4B160	-	AV	-	11		127
13.7	137	273	(120Hz)*	966	98.5	20500	2090	1.69	20	-	4B160	-	AV	-	13		127

Selection Table for Gearmotors: AF Motors

15 kW

Frequency	Hz	60Hz
Motor poles	P	4
Motor speed n_1	r/min	1750

IMPORTANT :
Please refer to page 54 for Gearmotor Selection Table notes.

Reduction ratio 14 ► 207

Base Frequency 60Hz									Model (refer to page 23)	Dimensional Drawing page
Output Speed n_2 [r/min]			Output Torque (at 60Hz)Tout		Allowable Radial Load of Output Shaft (at 60Hz) Pro		SF_G (At 60Hz)		Capacity - Frame - Suffix - Reduction	
At 6Hz	At 60Hz	Allowable Max Speed	N·m	kgf·m	N	kgf			Symbol Size Ratio	
12.5	125	250 (120Hz)*	1060	108	20800	2120	1.69		20 - 4B160 - AV - 14	127
10.9	109	219 (120Hz)*	1210	123	21200	2160	1.69		20 - 4B160 - AV - 16	127
10.0	100	200 (120Hz)*	1320	135	21500	2190	1.61		20 - 4B160 - AV - 18	127
8.33	83.3	167 (120Hz)*	1580	161	21900	2230	1.34		20 - 4B160 - AV - 21	127
7.81	78.1	156 (120Hz)*	1690	172	21900	2230	1.26		20 - 4B160 - AV - 22	127
7.14	71.4	143 (120Hz)*	1850	189	22100	2250	1.15		20 - 4B160 - AV - 25	127
7.14	71.4	143 (120Hz)*	1850	189	34300	3500	1.35		20 - 4C160 - AV - 25	129
6.25	62.5	125 (120Hz)*	2110	215	22200	2260	1.01		20 - 4B160 - AV - 28	127
6.25	62.5	125 (120Hz)*	2110	215	35000	3570	1.31		20 - 4C160 - AV - 28	129
4.97	49.7	99.4 (120Hz)*	2660	271	35900	3660	1.31		20 - 4C160 - AV - 35	129
4.55	45.5	90.9 (120Hz)*	2910	297	36300	3700	1.31		20 - 4C160 - AV - 39	129
3.85	38.5	76.9 (120Hz)*	3430	350	36700	3740	1.24		20 - 4C160 - AV - 46	129
3.33	33.3	66.7 (120Hz)*	3960	404	36900	3760	1.07		20 - 4C160 - AV - 53	129
3.33	33.3	66.7 (120Hz)*	3960	404	62100	6330	1.25		20 - 4D160 - AV - 53	131
2.94	29.4	58.8 (120Hz)*	4490	458	63300	6450	1.25		20 - 4D165 - AV - 60	131
2.60	26.0	52.1 (120Hz)*	5070	517	64200	6540	1.07		20 - 4D165 - AV - 67	131
2.60	26.0	52.1 (120Hz)*	5070	517	64200	6540	1.30		20 - 4D170 - AV - 67	131
2.38	23.8	47.6 (120Hz)*	5550	566	65000	6630	1.07		20 - 4D165 - AV - 74	131
2.38	23.8	47.6 (120Hz)*	5550	566	65000	6630	1.30		20 - 4D170 - AV - 74	131
2.19	21.9	43.8 (120Hz)*	6040	616	65500	6680	1.01		20 - 4D165 - AV - 80	131
2.19	21.9	43.8 (120Hz)*	6040	616	91200	9300	1.30		20 - 4E175 - AV - 80	133
2.00	20.0	40.0 (120Hz)*	6600	673	66100	6740	1.01		20 - 4D165 - AV - 88	131
2.00	20.0	40.0 (120Hz)*	6600	673	92600	9440	1.23		20 - 4E175 - AV - 88	133
1.72	17.2	34.5 (120Hz)*	7660	781	90600	9240	1.06		20 - 4E175 - AV - 102	133
1.56	15.6	31.3 (120Hz)*	8450	861	54700	5580	1.03		20 - 4D180 - AV - 112	131
1.56	15.6	31.3 (120Hz)*	8450	861	89000	9070	1.01		20 - 4E175 - AV - 112	133
1.56	15.6	31.3 (120Hz)*	8450	861	89000	9070	1.25		20 - 4E180 - AV - 112	133
1.56	15.6	31.3 (120Hz)*	8450	861	129000	13100	1.25		20 - 4F180 - AV - 112	135
1.43	14.3	28.6 (120Hz)*	9250	943	87400	8910	1.01		20 - 4E175 - AV - 123	133
1.43	14.3	28.6 (120Hz)*	9250	943	87400	8910	1.25		20 - 4E180 - AV - 123	133
1.43	14.3	28.6 (120Hz)*	9250	943	127000	12900	1.25		20 - 4F180 - AV - 123	135
1.16	11.6	23.3 (120Hz)*	11400	1160	83200	8480	1.01		20 - 4E180 - AV - 151	133
1.16	11.6	23.3 (120Hz)*	11400	1160	83200	8480	1.02		20 - 4E185 - AV - 151	133
1.16	11.6	23.3 (120Hz)*	11400	1160	124000	12600	1.01		20 - 4F180 - AV - 151	135
1.16	11.6	23.3 (120Hz)*	11400	1160	124000	12600	1.25		20 - 4F185 - AV - 151	135
0.980	9.80	19.6 (120Hz)*	13500	1380	120000	12200	1.01		20 - 4F185 - AV - 179	135
0.980	9.80	19.6 (120Hz)*	13500	1380	120000	12200	1.21		20 - 4F190 - AV - 179	135
0.847	8.47	16.9 (120Hz)*	15600	1590	117000	11900	1.02		20 - 4F190 - AV - 207	135
0.847	8.47	16.9 (120Hz)*	15600	1590	117000	11900	1.15		20 - 4F195 - AV - 207	135

18.5 kW

Frequency	Hz	60Hz
Motor poles	P	4
Motor speed n_1	r/min	1750

IMPORTANT :
Please refer to page 54 for Gearmotor Selection Table notes.

Reduction ratio 21 ► 60

Base Frequency 60Hz									Model (refer to page 23)	Dimensional Drawing page
Output Speed n_2 [r/min]			Output Torque (at 60Hz)Tout		Allowable Radial Load of Output Shaft (at 60Hz) Pro		SF_G (At 60Hz)		Capacity - Frame - Suffix - Reduction	
At 6Hz	At 60Hz	Allowable Max Speed	N·m	kgf·m	N	kgf			Symbol Size Ratio	
8.33	83.3	167 (120Hz)*	1950	199	32000	3260	1.83		25 - 4C170 - AV - 21	129
7.81	78.1	156 (120Hz)*	2090	213	32200	3280	1.83		25 - 4C170 - AV - 22	129
7.14	71.4	143 (120Hz)*	2280	232	32600	3320	1.83		25 - 4C170 - AV - 25	129
6.25	62.5	125 (120Hz)*	2610	266	33100	3370	1.63		25 - 4C170 - AV - 28	129
4.97	49.7	99.4 (120Hz)*	3280	334	33600	3430	1.30		25 - 4C170 - AV - 35	129
4.55	45.5	90.9 (120Hz)*	3580	365	33800	3450	1.19		25 - 4C170 - AV - 39	129
4.55	45.5	90.9 (120Hz)*	3580	365	56700	5780	1.49		25 - 4D170 - AV - 39	131
3.85	38.5	76.9 (120Hz)*	4240	432	33800	3450	1.01		25 - 4C170 - AV - 46	129
3.85	38.5	76.9 (120Hz)*	4240	432	58100	5920	1.48		25 - 4D170 - AV - 46	131
3.33	33.3	66.7 (120Hz)*	4890	498	59200	6030	1.38		25 - 4D170 - AV - 53	131
2.94	29.4	58.8 (120Hz)*	5540	565	60000	6120	1.06		25 - 4D170 - AV - 60	131
2.94	29.4	58.8 (120Hz)*	5540	565	60000	6120	1.30		25 - 4D175 - AV - 60	131

Selection Table for Gearmotors: AF Motors

18.5 kW

Frequency	Hz	60Hz
Motor poles	P	4
Motor speed n_1	r/min	1750

IMPORTANT :
Please refer to page 54 for Gearmotor Selection Table notes.

Reduction ratio 67 ► 179

Base Frequency 60Hz									Model (refer to page 23)	Dimensional Drawing page
Output Speed n_2 [r/min]				Output Torque (at 60Hz)Tout		Allowable Radial Load of Output Shaft (at 60Hz) Pro		SF_G (At 60Hz)	Capacity Symbol - Frame Size - Suffix - Reduction Ratio	
At 6Hz	At 60Hz	Allowable Max Speed		N·m	kgf·m	N	kgf			
2.60	26.0	52.1	(120Hz)*	6260	638	60500	6170	1.05	25 - 4D170 - AV - 67	131
2.60	26.0	52.1	(120Hz)*	6260	638	85000	8660	1.30	25 - 4E175 - AV - 67	133
2.38	23.8	47.6	(120Hz)*	6840	697	60900	6210	1.05	25 - 4D170 - AV - 74	131
2.19	21.9	43.8	(120Hz)*	7450	759	61100	6230	1.17	25 - 4D180 - AV - 80	131
2.19	21.9	43.8	(120Hz)*	7450	759	87100	8880	1.05	25 - 4E175 - AV - 80	133
2.19	21.9	43.8	(120Hz)*	7450	759	87200	8890	1.30	25 - 4E180 - AV - 80	133
2.19	21.9	43.8	(120Hz)*	7450	759	130000	13300	1.30	25 - 4F180 - AV - 80	135
2.00	20.0	40.0	(120Hz)*	8140	830	58900	6000	1.07	25 - 4D180 - AV - 88	131
2.00	20.0	40.0	(120Hz)*	8140	830	88200	8990	1.00	25 - 4E175 - AV - 88	133
2.00	20.0	40.0	(120Hz)*	8140	830	88200	8990	1.21	25 - 4E180 - AV - 88	133
2.00	20.0	40.0	(120Hz)*	8140	830	129000	13100	1.30	25 - 4F180 - AV - 88	133
1.72	17.2	34.5	(120Hz)*	9450	963	87000	8870	1.04	25 - 4E180 - AV - 102	133
1.72	17.2	34.5	(120Hz)*	9450	963	127000	12900	1.05	25 - 4F180 - AV - 102	135
1.72	17.2	34.5	(120Hz)*	9450	963	127000	12900	1.30	25 - 4F185 - AV - 102	135
1.56	15.6	31.3	(120Hz)*	10400	1060	85100	8670	1.02	25 - 4E180 - AV - 112	133
1.56	15.6	31.3	(120Hz)*	10400	1060	85100	8670	1.11	25 - 4E185 - AV - 112	133
1.56	15.6	31.3	(120Hz)*	10400	1060	125000	12700	1.02	25 - 4F180 - AV - 112	135
1.56	15.6	31.3	(120Hz)*	10400	1060	125000	12700	1.22	25 - 4F185 - AV - 112	135
1.43	14.3	28.6	(120Hz)*	11400	1160	83100	8470	1.02	25 - 4E180 - AV - 123	133
1.43	14.3	28.6	(120Hz)*	11400	1160	124000	12600	1.02	25 - 4F180 - AV - 123	135
1.43	14.3	28.6	(120Hz)*	11400	1160	124000	12600	1.22	25 - 4F185 - AV - 123	135
1.16	11.6	23.3	(120Hz)*	14000	1430	119000	12100	1.02	25 - 4F185 - AV - 151	135
1.16	11.6	23.3	(120Hz)*	14000	1430	119000	12100	1.13	25 - 4F190 - AV - 151	135
0.980	9.80	19.6	(120Hz)*	16600	1690	115000	11700	1.08	25 - 4F195 - AV - 179	135

22 kW

Frequency	Hz	60Hz
Motor poles	P	4
Motor speed n_1	r/min	1750

IMPORTANT :
Please refer to page 54 for Gearmotor Selection Table notes.

Reduction ratio 21 ► 74

Base Frequency 60Hz									Model (refer to page 23)	Dimensional Drawing page
Output Speed n_2 [r/min]				Output Torque (at 60Hz)Tout		Allowable Radial Load of Output Shaft (at 60Hz) Pro		SF_G (At 60Hz)	Capacity Symbol - Frame Size - Suffix - Reduction Ratio	
At 6Hz	At 60Hz	Allowable Max Speed		N·m	kgf·m	N	kgf			
8.33	83.3	167	(120Hz)*	2320	236	30600	3120	1.54	30 - 4C170 - AV - 21	129
7.81	78.1	156	(120Hz)*	2480	253	30700	3130	1.54	30 - 4C170 - AV - 22	129
7.14	71.4	143	(120Hz)*	2710	276	31000	3160	1.54	30 - 4C170 - AV - 25	129
6.25	62.5	125	(120Hz)*	3100	316	31300	3190	1.37	30 - 4C170 - AV - 28	129
4.97	49.7	99.4	(120Hz)*	3900	398	31200	3180	1.09	30 - 4C170 - AV - 35	129
4.97	49.7	99.4	(120Hz)*	3900	398	53800	5480	1.25	30 - 4D170 - AV - 35	131
4.55	45.5	90.9	(120Hz)*	4260	434	31200	3180	1.00	30 - 4C170 - AV - 39	129
4.55	45.5	90.9	(120Hz)*	4260	434	54500	5560	1.25	30 - 4D170 - AV - 39	131
3.85	38.5	76.9	(120Hz)*	5040	514	55600	5670	1.24	30 - 4D170 - AV - 46	131
3.33	33.3	66.7	(120Hz)*	5810	592	56300	5740	1.16	30 - 4D170 - AV - 53	131
3.33	33.3	66.7	(120Hz)*	5810	592	79000	8050	1.37	30 - 4E175 - AV - 53	133
2.94	29.4	58.8	(120Hz)*	6590	672	56700	5780	1.10	30 - 4D175 - AV - 60	131
2.94	29.4	58.8	(120Hz)*	6590	672	56700	5780	1.32	30 - 4D180 - AV - 60	131
2.94	29.4	58.8	(120Hz)*	6590	672	80500	8210	1.39	30 - 4E180 - AV - 60	133
2.94	29.4	58.8	(120Hz)*	6590	672	132000	13500	1.39	30 - 4F180 - AV - 60	135
2.60	26.0	52.1	(120Hz)*	7440	758	56800	5790	1.17	30 - 4D180 - AV - 67	131
2.60	26.0	52.1	(120Hz)*	7440	758	81600	8320	1.10	30 - 4E175 - AV - 67	133
2.60	26.0	52.1	(120Hz)*	7440	758	81700	8330	1.32	30 - 4E180 - AV - 67	133
2.60	26.0	52.1	(120Hz)*	7440	758	130000	13300	1.36	30 - 4F180 - AV - 67	135
2.38	23.8	47.6	(120Hz)*	8140	830	56800	5790	1.07	30 - 4D180 - AV - 74	131
2.38	23.8	47.6	(120Hz)*	8140	830	82500	8410	1.00	30 - 4E175 - AV - 74	133
2.38	23.8	47.6	(120Hz)*	8140	830	82500	8410	1.21	30 - 4E180 - AV - 74	133
2.38	23.8	47.6	(120Hz)*	8140	830	129000	13100	1.36	30 - 4F180 - AV - 74	135

Selection Table for Gearmotors: AF Motors

22 kW

Frequency	Hz	60Hz
Motor poles	P	4
Motor speed n_1	r/min	1750

IMPORTANT :
Please refer to page 54 for Gearmotor Selection Table notes.

Reduction ratio 21 ► 179

Base Frequency 60Hz									Model (refer to page 23)								Dimensional Drawing page
Output Speed n_2 [r/min]				Output Torque (at 60Hz)Tout		Allowable Radial Load of Output Shaft (at 60Hz) Pro		SF_G (At 60Hz)	Capacity Symbol	-	Frame Size	-	Suffix	-	Reduction Ratio		
At 6Hz	At 60Hz	Allowable Max Speed		N·m	kgf·m	N	kgf										
2.19	21.9	43.8	(120Hz)*	8860	903	48400	4930	0.99	30	-	4D180	-	AV	-	80		131
2.19	21.9	43.8	(120Hz)*	8860	903	83100	8470	1.10	30	-	4E180	-	AV	-	80		133
2.19	21.9	43.8	(120Hz)*	8860	903	83100	8470	1.11	30	-	4E185	-	AV	-	80		133
2.19	21.9	43.8	(120Hz)*	8860	903	128000	13000	1.10	30	-	4F180	-	AV	-	80		135
2.19	21.9	43.8	(120Hz)*	8860	903	128000	13000	1.37	30	-	4F185	-	AV	-	80		135
2.00	20.0	40.0	(120Hz)*	9690	988	83700	8530	1.01	30	-	4E180	-	AV	-	88		133
2.00	20.0	40.0	(120Hz)*	9690	988	127000	12900	1.10	30	-	4F180	-	AV	-	88		135
2.00	20.0	40.0	(120Hz)*	9690	988	127000	12900	1.37	30	-	4F185	-	AV	-	88		135
1.72	17.2	34.5	(120Hz)*	11200	1140	124000	12600	1.10	30	-	4F185	-	AV	-	102		135
1.72	17.2	34.5	(120Hz)*	11200	1140	124000	12600	1.40	30	-	4F190	-	AV	-	102		135
1.56	15.6	31.3	(120Hz)*	12400	1260	122000	12400	1.03	30	-	4F185	-	AV	-	112		135
1.56	15.6	31.3	(120Hz)*	12400	1260	122000	12400	1.37	30	-	4F195	-	AV	-	112		135
1.43	14.3	28.6	(120Hz)*	13600	1390	120000	12200	1.03	30	-	4F185	-	AV	-	123		135
1.43	14.3	28.6	(120Hz)*	13600	1390	120000	12200	1.33	30	-	4F195	-	AV	-	123		135
1.16	11.6	23.3	(120Hz)*	16700	1700	115000	11700	1.08	30	-	4F195	-	AV	-	151		135

30 kW

Frequency	Hz	60Hz
Motor poles	P	4
Motor speed n_1	r/min	1750

IMPORTANT :
Please refer to page 54 for Gearmotor Selection Table notes.

Reduction ratio 35 ► 112

Base Frequency 60Hz									Model (refer to page 23)								Dimensional Drawing page
Output Speed n_2 [r/min]				Output Torque (at 60Hz)Tout		Allowable Radial Load of Output Shaft (at 60Hz) Pro		SF_G (At 60Hz)	Capacity Symbol	-	Frame Size	-	Suffix	-	Reduction Ratio		
At 6Hz	At 60Hz	Allowable Max Speed		N·m	kgf·m	N	kgf										
4.97	49.7	99.4	(120Hz)*	5310	541	49400	5040	1.38	40	-	4D180	-	AV	-	35※		131
4.97	49.7	99.4	(120Hz)*	5310	541	69600	7090	1.38	40	-	4E180	-	AV	-	35※		133
4.97	49.7	99.4	(120Hz)*	5310	541	69600	7090	1.50	40	-	4E185	-	AV	-	35※		133
4.97	49.7	99.4	(120Hz)*	5310	541	127000	12900	1.50	40	-	4F185	-	AV	-	35※		135
4.55	45.5	90.9	(120Hz)*	5810	592	49600	5060	1.38	40	-	4D180	-	AV	-	39		131
4.55	45.5	90.9	(120Hz)*	5810	592	70500	7190	1.38	40	-	4E180	-	AV	-	39		133
4.55	45.5	90.9	(120Hz)*	5810	592	70500	7190	1.50	40	-	4E185	-	AV	-	39		133
4.55	45.5	90.9	(120Hz)*	5810	592	129000	13100	1.38	40	-	4F180	-	AV	-	39		135
4.55	45.5	90.9	(120Hz)*	5810	592	129000	13100	1.50	40	-	4F185	-	AV	-	39		135
3.85	38.5	76.9	(120Hz)*	6870	700	49800	5080	1.24	40	-	4D180	-	AV	-	46		131
3.85	38.5	76.9	(120Hz)*	6870	700	72000	7340	1.38	40	-	4E180	-	AV	-	46		133
3.85	38.5	76.9	(120Hz)*	6870	700	72000	7340	1.43	40	-	4E185	-	AV	-	46		133
3.85	38.5	76.9	(120Hz)*	6870	700	131000	13400	1.38	40	-	4F180	-	AV	-	46		135
3.85	38.5	76.9	(120Hz)*	6870	700	131000	13400	1.50	40	-	4F185	-	AV	-	46		135
3.33	33.3	66.7	(120Hz)*	7920	807	49600	5060	1.08	40	-	4D180	-	AV	-	53		131
3.33	33.3	66.7	(120Hz)*	7920	807	72900	7430	1.08	40	-	4E180	-	AV	-	53		133
3.33	33.3	66.7	(120Hz)*	7920	807	72900	7430	1.24	40	-	4E185	-	AV	-	53		133
3.33	33.3	66.7	(120Hz)*	7920	807	130000	13300	1.08	40	-	4F180	-	AV	-	53		135
3.33	33.3	66.7	(120Hz)*	7920	807	130000	13300	1.30	40	-	4F185	-	AV	-	53		135
2.94	29.4	58.8	(120Hz)*	8980	915	73600	7500	1.02	40	-	4E180	-	AV	-	60		133
2.94	29.4	58.8	(120Hz)*	8980	915	73600	7500	1.09	40	-	4E185	-	AV	-	60		133
2.94	29.4	58.8	(120Hz)*	8980	915	128000	13000	1.02	40	-	4F180	-	AV	-	60		135
2.94	29.4	58.8	(120Hz)*	8980	915	128000	13000	1.30	40	-	4F185	-	AV	-	60		135
2.60	26.0	52.1	(120Hz)*	10100	1030	126000	12800	1.00	40	-	4F180	-	AV	-	67		135
2.60	26.0	52.1	(120Hz)*	10100	1030	126000	12800	1.30	40	-	4F185	-	AV	-	67		135
2.38	23.8	47.6	(120Hz)*	11100	1130	124000	12600	1.00	40	-	4F180	-	AV	-	74		135
2.38	23.8	47.6	(120Hz)*	11100	1130	124000	12600	1.30	40	-	4F185	-	AV	-	74		135
2.19	21.9	43.8	(120Hz)*	12100	1230	123000	12500	1.00	40	-	4F185	-	AV	-	80		135
2.19	21.9	43.8	(120Hz)*	12100	1230	123000	12500	1.35	40	-	4F195	-	AV	-	80		135
2.00	20.0	40.0	(120Hz)*	13200	1350	121000	12300	1.00	40	-	4F185	-	AV	-	88		135
2.00	20.0	40.0	(120Hz)*	13200	1350	121000	12300	1.35	40	-	4F195	-	AV	-	88		135
1.72	17.2	34.5	(120Hz)*	15300	1560	117000	11900	1.02	40	-	4F190	-	AV	-	102		135
1.72	17.2	34.5	(120Hz)*	15300	1560	117000	11900	1.17	40	-	4F195	-	AV	-	102		135
1.56	15.6	31.3	(120Hz)*	16900	1720	114000	11600	1.00	40	-	4F195	-	AV	-	112		135

Selection Table for Gearmotors: AF Motors

37 kW	Frequency	Hz	60Hz
	Motor poles	P	4
	Motor speed n_1	r/min	1750

IMPORTANT :
Please refer to page 54 for Gearmotor Selection Table notes.

Reduction ratio 35 ► 88

Base Frequency 60Hz									Model (refer to page 23)								Dimensional Drawing page
Output Speed n_2 [r/min]				Output Torque (at 60Hz)Tout		Allowable Radial Load of Output Shaft (at 60Hz) Pro		SF_G (At 60Hz)	Capacity Symbol	-	Frame Size	-	Suffix	-	Reduction Ratio		
At 6Hz	At 60Hz	Allowable Max Speed		N·m	kgf·m	N	kgf										
4.97	49.7	99.4	(120Hz)*	6550	668	66100	6740	1.37	50	-	4E190	-	AV	-	35※		133
4.97	49.7	99.4	(120Hz)*	6550	668	66100	6740	1.49	50	-	4E195	-	AV	-	35※		133
4.97	49.7	99.4	(120Hz)*	6550	668	123000	12500	1.37	50	-	4F190	-	AV	-	35※		135
4.97	49.7	99.4	(120Hz)*	6550	668	123000	12500	1.49	50	-	4F195	-	AV	-	35※		135
4.55	45.5	90.9	(120Hz)*	7170	731	66600	6790	1.37	50	-	4E190	-	AV	-	39		133
4.55	45.5	90.9	(120Hz)*	7170	731	126000	12800	1.37	50	-	4F190	-	AV	-	39		135
4.55	45.5	90.9	(120Hz)*	7170	731	126000	12800	1.49	50	-	4F195	-	AV	-	39		135
3.85	38.5	76.9	(120Hz)*	8470	863	67300	6860	1.16	50	-	4E190	-	AV	-	46		133
3.85	38.5	76.9	(120Hz)*	8470	863	129000	13100	1.37	50	-	4F190	-	AV	-	46		135
3.85	38.5	76.9	(120Hz)*	8470	863	129000	13100	1.49	50	-	4F195	-	AV	-	46		135
3.33	33.3	66.7	(120Hz)*	9770	996	67600	6890	1.01	50	-	4E190	-	AV	-	53		133
3.33	33.3	66.7	(120Hz)*	9770	996	126000	12800	1.37	50	-	4F190	-	AV	-	53		135
3.33	33.3	66.7	(120Hz)*	9770	996	126000	12800	1.49	50	-	4F195	-	AV	-	53		135
2.94	29.4	58.8	(120Hz)*	11100	1130	124000	12600	1.37	50	-	4F190	-	AV	-	60		135
2.94	29.4	58.8	(120Hz)*	11100	1130	124000	12600	1.49	50	-	4F195	-	AV	-	60		135
2.60	26.0	52.1	(120Hz)*	12500	1270	122000	12400	1.11	50	-	4F190	-	AV	-	67		135
2.60	26.0	52.1	(120Hz)*	12500	1270	122000	12400	1.30	50	-	4F195	-	AV	-	67		135
2.38	23.8	47.6	(120Hz)*	13700	1400	120000	12200	1.11	50	-	4F190	-	AV	-	74		135
2.38	23.8	47.6	(120Hz)*	13700	1400	120000	12200	1.30	50	-	4F195	-	AV	-	74		135
2.19	21.9	43.8	(120Hz)*	14900	1520	118000	12000	1.09	50	-	4F195	-	AV	-	80		135
2.00	20.0	40.0	(120Hz)*	16300	1660	115000	11700	1.09	50	-	4F195	-	AV	-	88		135

Dimensional Drawings for Gearmotors

Important Notes :

1. All the dimension values (except for shaft diameter and main mounting sections) on the dimensional drawings in this catalog are the maximum values determined considering the concavo-convex portions on each section. Thus, they may somewhat differ from those of the actual products.
2. Consult us for the dimensions of any portions not specified on the dimensional drawings.
3. The dimensional drawings on this catalog are subject to change without prior notice.
4. Perform the final confirmation on the dimension of product with our manufacturing specification.

Shaft Mounted Gearmotors:

Bevel + Cyclo Single Stage
Bevel + Cyclo Double Stage

Size	Page
4A	125
4B	127
4C	129
4D	131
4E	133
4F	135

Supplementary Dimensions:

	Page
Hollow Shaft with Flange Mount :	137
Solid Shaft with Flange Mount :	139
Solid Shaft with Foot Mount :	141

Dimensional Drawings

Shaft Mounted Gearmotors

Examples:

3Ph Motors : L◇YM△ - 4A10□ ~ 4A14□ - ⋮⋮ (-B) - Reduction Ratio
: L◇YM△ - 4A10DA ~ 4A12DB- ⋮⋮ (-B)- Reduction Ratio
AF Motors : L◇YM△ - 4A10□ ~ 4A14□ -AV ⋮⋮ (-B)- Reduction Ratio
: L◇YM△ - 4A10DA ~ 4A12DB -AV ⋮⋮ (-B)- Reduction Ratio
IE2 Motors : L◇YM△ - 4A10□ ~ 4A14□ - ES ⋮⋮ (-B)- Reduction Ratio
: L◇YM△ - 4A10DA ~ 4A12DB - ES ⋮⋮ (-B)- Reduction Ratio
(Refer to Notes on Page 126)

Supplementary Dimensions:

Hollow Shaft with Flange Mount : L◇YM△ - .....- F1 / G1 - Reduction Ratio -->Page 137 - 138
Solid Shaft with Flange Mount : L◇FM△ - .....- F1 / G1 - Reduction Ratio --> Page 139 - 140
Solid Shaft with Foot Mount : L◇HM△ - .....- K1 - Reduction Ratio --> Page 141 - 142

Mounting Position **Y1**

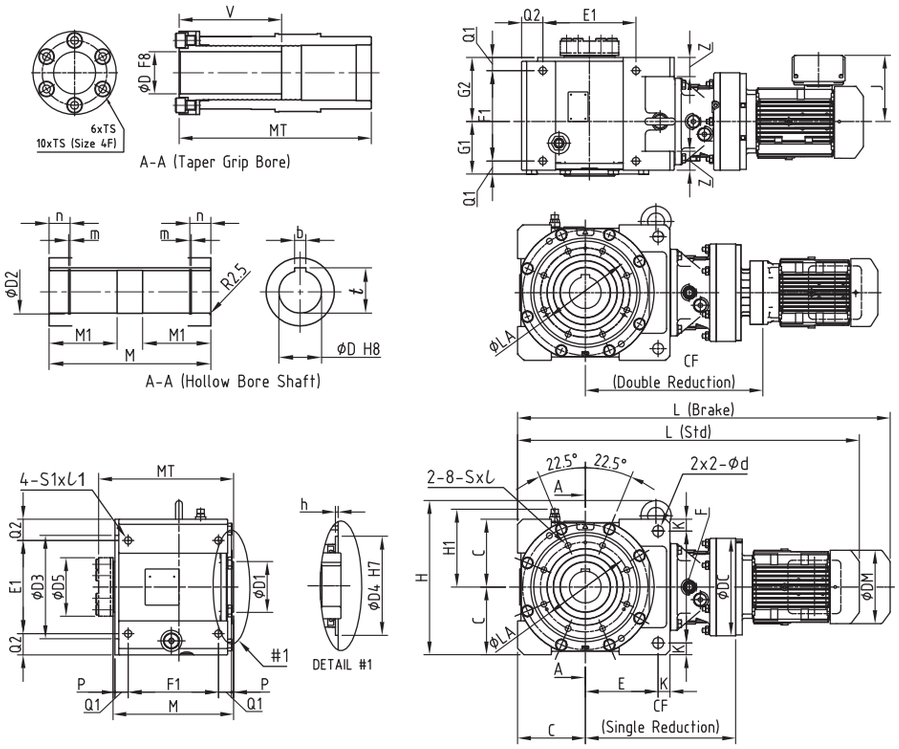

Mounting Position **Y2**

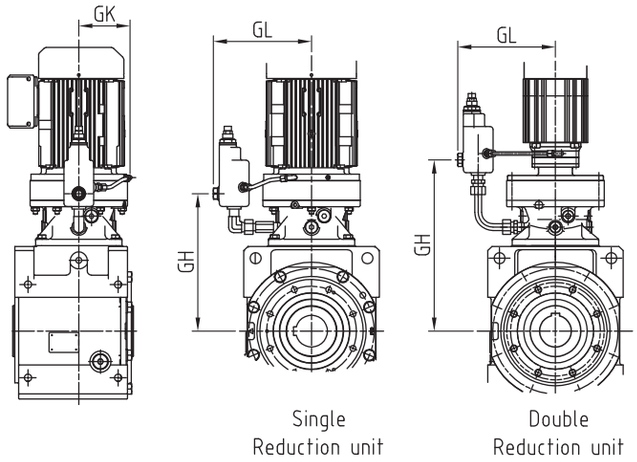

Note: Consult us for dimensions of mounting positions other than Y1 and Y2

Frame#3 Size	C E	F K	Z d	Q1 F1	Q2 E1	M MT	P	G1 G2	H H1	D b t	D1 D2 D3	M1 m n	V TS	LA	D4 h D5	S ℓ	S1 ℓ1
4A10 □																	
4A10DA																	
4A11 □	110 114	184 18	35 18	23 160	35 150	216 245	5	96 111	276 141	55 16 59.3	85 58 175	85 2.2 30	130 M12	155	130 4 104	M10 17	M12 20
4A12 □																	
4A12DA																	
4A12DB																	
4A14 □																	

Dimensional Drawings

Shaft Mounted Gearmotors

Frame#3 Size	Motor capacity kWx4P	AF Motor Capacity kWx4P	IE2 Motor Capicity kWx4P	J	DM	L (Std) L (Brake)	Weight (Std) Weight (Brake)	CF DC	GK GL GH
4A10 □	0.2			114	124	523 555	53 55	237 150	96 152 220
	0.25			114	124	523 555	53 55		
	0.4	0.2		114	124	543 575	55 56		
	0.55			143	151	584 627	58 61		
	0.75	0.4		143	151	584 627	58 61		
	1.1			148	160	617 679	62 67		
	1.5	0.75	0.75	148	160	617 679	62 67		
	2.2	1.5	1.1 1.5	155	173	637 700	66 73		
	3.0	2.2	2.2	166	212	696 768	77 86		
4A10DA	0.1			114	124	546 564	54 55	285 150	- 152 278
	0.2	0.1		114	124	571 603	55 56		
	0.25			114	124	571 603	55 56		
	0.4	0.2		114	124	591 623	56 57		
4A11 □	0.25			114	124	551 582	59 60	248 162	102 174 228
	0.4			114	124	551 582	59 60		
	0.55			143	151	591 634	60 63		
	0.75	0.4		143	151	591 634	60 63		
	1.1			148	160	624 686	64 69		
	1.5	0.75	0.75	148	160	624 686	64 69		
	2.2	1.5	1.1 1.5	155	173	644 707	68 75		
	3.0			166	212	679 751	79 88		
	3.7	2.2	2.2	166	212	679 751	79 88		
4A12 □	0.4			114	124	555 587	63 66	244 204	134 203 226
	0.55			143	151	591 634	64 67		
	0.75			143	151	591 634	64 67		
	1.1			148	160	624 686	68 73		
	1.5	0.75	0.75	148	160	624 686	68 73		
	2.2	1.5	1.5	155	173	644 707	72 79		
	3.0			166	212	667 739	84 93		
	3.7	2.2	2.2	166	212	667 739	84 93		
	5.5	3.7	3.0 3.7	166	212	711 783	91 100		
	7.5	5.5	5.5	211	251	739 814	102 120		
	11	7.5	7.5	211	251	799 874	116 134		

Frame#3 Size	Motor capacity kWx4P	AF Motor Capacity kWx4P	IE2 Motor Capicity kWx4P	J	DM	L (Std) L (Brake)	Weight (Std) Weight (Brake)	CF DC	GK GL GH
4A12DA	0.1			114	124	558 576	62 63	297 204	- 203 290
	0.2	0.1		114	124	583 615	63 64		
	0.25			114	124	583 615	63 64		
	0.4	0.2		114	124	603 635	64 65		
4A12DB	0.2			114	124	595 627	66 68	309 204	- 203 299
	0.25			114	124	595 627	66 68		
	0.4	0.2		114	124	615 647	67 69		
	0.55			143	151	656 699	70 73		
	0.75	0.4		143	151	656 699	70 73		
		0.75	0.75	148	173	689 751	73 78		
4A14 □	2.2	1.5	1.1 1.5	155	173	665 728	80 87	265 230	134 231 244
	3.0			166	212	688 760	92 101		
	3.7	2.2	2.2	166	212	688 760	92 101		
	5.5	3.7	3.0 3.7	166	212	732 804	99 108		
	7.5	5.5	5.5	211	251	755 850	112 131		
	11	7.5	7.5	211	251	815 910	126 144		
	15	11	11	262	324	905 1037	184 221		

1 Mark ◇ in model nomenclature represents output shaft direction symbol H, V or W. For details, please refer to Nomenclature page (Page 23).
2 Mark △ in model nomenclature represents motor capacity symbol.
3 Mark □ in frame size number represents "0" or "5".
4 ⁝⁝⁝

Dimensional Drawings

Shaft Mounted Gearmotors

Examples:

3Ph Motors : L◇YM△ - 4B12□ ~ 4B16□ - ⁝□⁝ (-B) - Reduction Ratio
: L◇YM△ - 4B12DA ~ 4B14DB- ⁝□⁝ (-B)- Reduction Ratio
AF Motors : L◇YM△ - 4B12□ ~ 4B16□ -AV ⁝□⁝ (-B)- Reduction Ratio
: L◇YM△ - 4B12DA ~ 4B14DC -AV ⁝□⁝ (-B)- Reduction Ratio
IE2 Motors : L◇YM△ - 4B12□ ~ 4B16□ - ES ⁝□⁝ (-B)- Reduction Ratio
: L◇YM△ - 4B12DA ~ 4B14DC - ES ⁝□⁝ (-B)- Reduction Ratio

(Refer to Notes on Page 128)

Supplementary Dimensions:

Hollow Shaft with Flange Mount : L◇YM△ - .....- F1 / G1 - Reduction Ratio -->Page 137 - 138
Solid Shaft with Flange Mount : L◇FM△ - .....- F1 / G1 - Reduction Ratio --> Page 139 - 140
Solid Shaft with Foot Mount : L◇HM△ - .....- K1 - Reduction Ratio --> Page 141 - 142

Mounting Position **Y1**

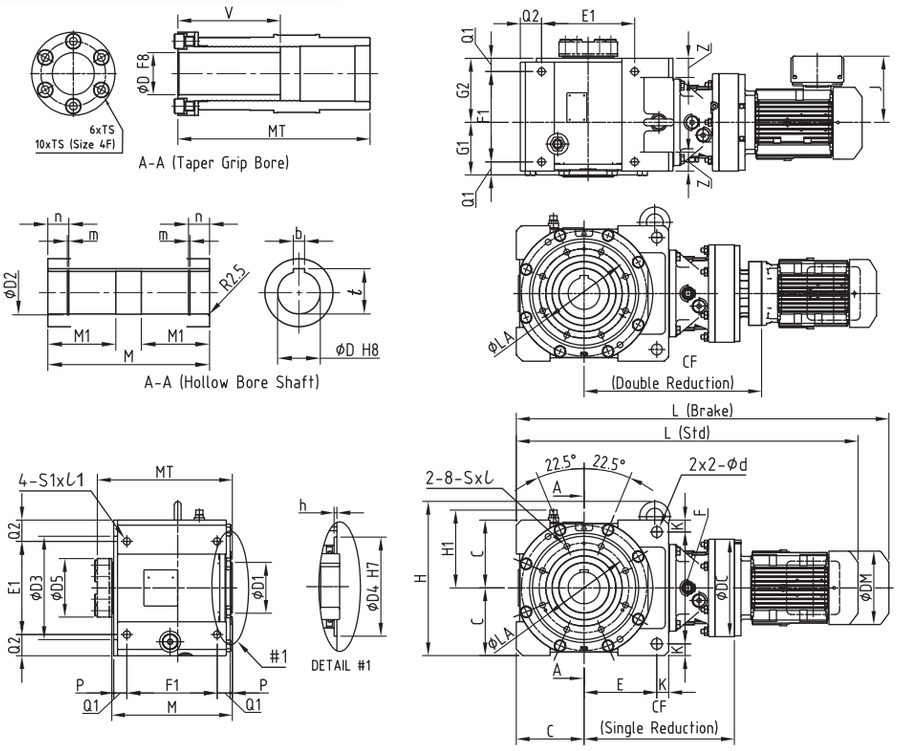

Mounting Position **Y2**

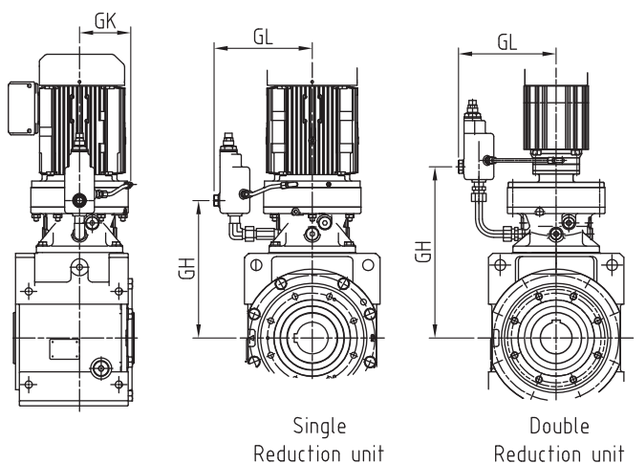

Note: Consult us for dimensions of mounting positions other than Y1 and Y2

Frame#3 Size	C E	F K	Z d	Q1 F1	Q2 E1	M MT	P	G1 G2	H H1	D b t	D1 D2 D3	M1 m n	V TS	LA	D4 h D5	S ℓ	S1 ℓ1
4B12 □																	
4B12DA																	
4B12DA																	
4B12DB	130	214	40	27	35	259	5	122	306	65	100	100	145	175	150	M12	M16
4B14 □	142	23	22	195	190	291		127	161	18	68	2.7	M12		4	20	26
4B14DA										69.4	199	30			114		
4B14DB																	
4B14DC																	
4B16 □																	

Dimensional Drawings

Shaft Mounted Gearmotors

Frame#3 Size	Motor Capacity kWx4P	AF Motor Capacity kWx4P	IE2 Motor Capicity kWx4P	J	DM	L (Std) L (Brake)	Weight (Std) Weight (Brake)	CF DC	GK GL GH
4B12□	0.4	0.2		114	124	611 643	91 92	280 204	134 203 63
	0.55			143	151	647 690	92 95		
	0.75	0.4		143	151	647 690	92 95		
	1.1			148	160	680 742	96 101		
	1.5	0.75	0.75	148	160	680 742	96 101		
	2.2	1.5	1.1 1.5	155	173	700 763	100 107		
	3.0			166	212	723 795	112 121		
	3.7	2.2	2.2	166	212	723 795	112 121		
	5.5	3.7	3.0 3.7	166	212	767 839	119 128		
4B12DA	0.1			114	124	615 633	91 92	334 204	- 203 327
	0.2	0.1		114	124	640 672	92 93		
	0.25			114	124	640 672	92 93		
	0.4	0.2		114	124	660 692	93 94		
4B12DB	0.2			114	124	652 684	95 97	346 204	- 203 336
	0.25			114	124	652 684	95 97		
	0.4	0.2		114	124	672 704	96 98		
	0.55			143	151	713 756	99 102		
	0.75	0.4		143	151	713 756	99 102		
	1.1	0.75	0.75	148	160	746 808	102 107		
4B14□	0.55			143	151	665 708	100 103	298 230	134 231 276
	0.75	0.4		143	151	665 708	100 103		
	1.1			148	160	698 760	104 109		
	1.5	0.75	0.75	148	160	702 760	104 109		
	2.2	1.5	1.1 1.5	155	173	718 781	107 114		
	3.0			166	212	741 813	119 128		
	3.7	2.2	2.2	166	212	741 813	119 128		
	5.5	3.7	3.0 3.7	166	212	785 857	126 135		
	7.5	5.5	5.5	211	251	808 903	139 158		
	11	7.5	7.5	211	251	868 963	153 171		
	15	11	11	262	324	957 1089	211 248		
4B14DA	0.1			114	124	632 650	95 96	351 230	- 231 349
	0.2	0.1		114	124	657 689	96 97		
	0.25			114	124	657 689	96 97		
	0.4	0.2		114	124	677 709	97 98		

Frame#3 Size	Motor capacity kWx4P	AF Motor Capacity kWx4P	IE2 Motor Capicity kWx4P	J	DM	L (Std) L (Brake)	Weight (Std) Weight (Brake)	CF DC	GK GL GH
4B14DB	0.2	0.1		114	124	666 698	96 97	360 230	- 231 353
	0.25			114	124	666 698	96 97		
	0.4	0.2		114	124	686 718	97 98		
	0.55			143	151	736 779	102 104		
	0.75	0.4		141	151	736 779	102 104		
		0.75	0.75	148	160	760 822	103 107		
4B14DC		1.5	1.5	148	160	795 858	110 115	375 230	- 231 359
4B16□	7.5			211	251	841 936	161 180	326 300	168 261 293
	11	7.5	7.5	211	251	901 996	175 192		
	15	11	11	262	324	986 1118	232 269		
	18.5			340	394	1081 1276	308 368		
	22	15	15	340	394	1081 1276	308 368		

1 Mark ◇ in model nomenclature represents output shaft direction symbol H, V or W.
For details, please refer to Nomenclature page (Page 23).
2 Mark △ in model nomenclature represents motor capacity symbol.
3 Mark □ in frame size number represents "0" or "5.
4 ⁞.....⁞ in model nomenclature refers to the mounting position symbol.
For details please refer to pages 24 to 33.
5 Output bore diameters (keyed bores) are manufactured to H8 tolerances according to JIS B 0401-1976
6 Keyways are manufactured according to JIS B 1301-1976 (Parallel Key, Standard Class).
7 The weight values indicated in the tables are for hollow shaft units.
8 Dimensions and weights are subject to change without prior notice.

Dimensional Drawings

Shaft Mounted Gearmotors

Examples:

3Ph Motors : L◇YM△ - 4C14□ ~ 4C17□ - ⁝⁝⁝ (-B) - Reduction Ratio
: L◇YM△ - 4C14DA ~ 4C16DB- ⁝⁝⁝ (-B)- Reduction Ratio
AF Motors : L◇YM△ - 4C14□ ~ 4C17□ -AV ⁝⁝⁝ (-B)- Reduction Ratio
: L◇YM△ - 4C14DA ~ 4C16DC -AV ⁝⁝⁝ (-B)- Reduction Ratio
IE2 Motors : L◇YM△ - 4C14□ ~ 4C17□ - ES ⁝⁝⁝ (-B)- Reduction Ratio
: L◇YM△ - 4C14DA ~ 4C16DC - ES ⁝⁝⁝ (-B)- Reduction Ratio

(Refer to Notes on Page 130)

Supplementary Dmensions:

Hollow Shaft with Flange Mount : L◇YM△ - .....- F1 / G1 - Reduction Ratio -->Page 137 - 138
Solid Shaft with Flange Mount : L◇FM△ - .....- F1 / G1 - Reduction Ratio --> Page 139 - 140
Solid Shaft with Foot Mount : L◇HM△ - .....- K1 - Reduction Ratio --> Page 141 - 142

Mounting Position **Y1**

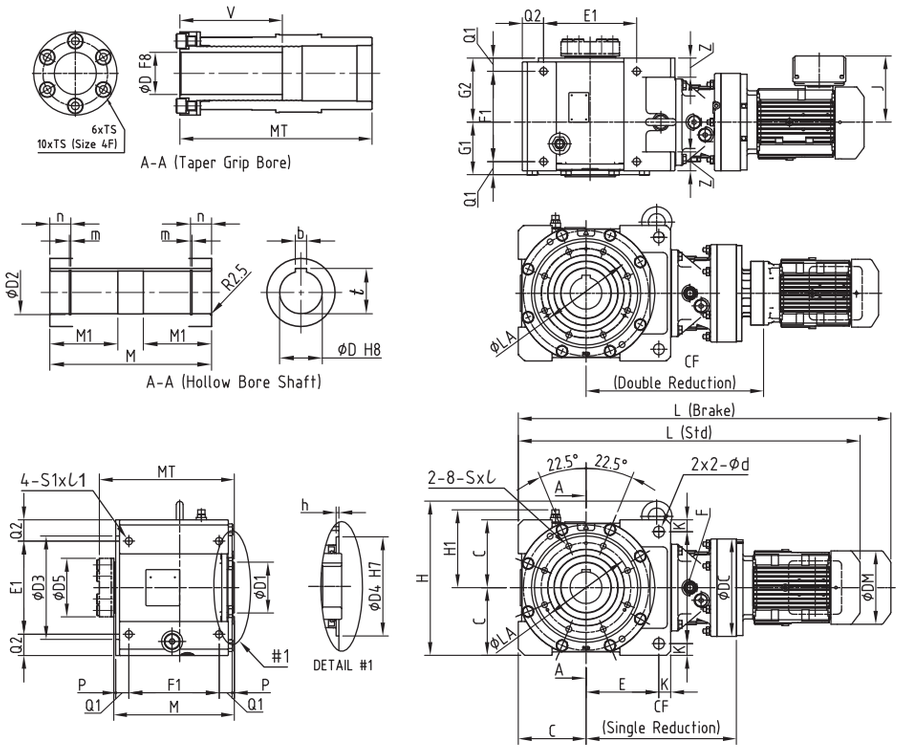

Mounting Position **Y2**

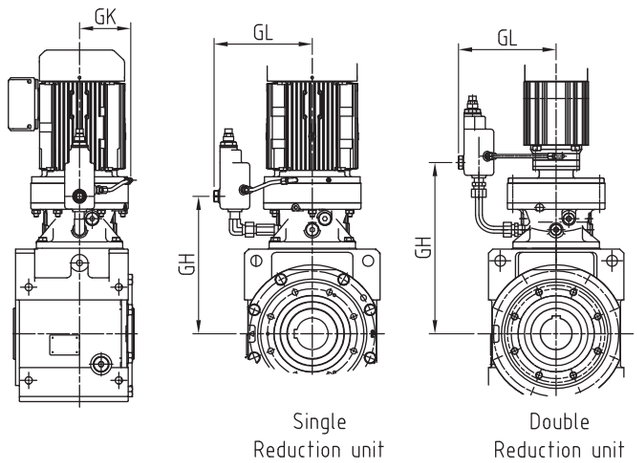

Note: Consult us for dimensions of mounting positions other than Y1 and Y2

Frame#3 Size	C E	F K	Z d	Q1 F1	Q2 E1	M MT	P	G1 G2	H H1	D b t	D1 D2 D3	M1 m n	V TS	LA	D4 h D5	S ℓ	S1 ℓ1
4C14 □																	
4C14DA																	
4C14DB																	
4C14DC																	
4C16 □	160 172	264 28	45 26	31 213	50 220	285 320	5	124 151	364 193	75 20 79.9	120 78 244	120 2.7 37	170 M16	212	180 5 138	M16 26	M20 33
4C16DA																	
4C16DB																	
4C17 □																	
4C17DC																	

Dimensional Drawings

Shaft Mounted Gearmotors

Frame#3 Size	Motor capacity kWx4P	AF Motor Capacity kWx4P	IE2 Motor Capicity kWx4P	J	DM	L (Std) L (Brake)	Weight (Std) Weight (Brake)	CF DC	GK GL GH
4C14 □	0.75	0.4		143	151	752 795	146 149	356 230	134 231 334
	1.1			148	160	785 847	150 155		
	1.5	0.75	0.75	148	160	785 847	150 155		
	2.2	1.5	1.1 1.5	155	173	806 869	154 161		
	3.0			166	212	828 900	165 174		
	3.7	2.2	2.2	166	212	829 901	166 175		
	5.5	3.7	3.0 3.7	166	212	873 945	173 182		
	7.5	5.5	5.5	211	251	896 991	186 205		
	11	7.5	7.5	211	251	956 1051	200 218		
	15	11	11	262	324	1046 1178	258 296		
4C14DA	0.1			114	124	721 739	142 143	410 230	- 231 407
	0.2	0.1		114	124	746 778	143 144		
	0.25			114	124	746 778	143 144		
	0.4	0.2		114	124	766 798	144 146		
4C14DB	0.2	0.1		114	124	755 787	145 146	419 230	- 231 411
	0.25			114	124	755 787	145 146		
	0.4	0.2		114	124	775 807	146 148		
	0.55			143	151	816 859	149 152		
	0.75	0.4		143	151	816 859	149 152		
	1.1			148	160	849 911	152 157		
	1.5	0.75	0.75	148	160	849 911	152 157		
4C14DC	0.75	0.4		143	151	830 873	151 154	433 230	- 231 418
	1.1			148	160	863 925	155 160		
	1.5	0.75	0.75	148	160	863 925	155 160		
	2.2	1.5	1.1 1.5	155	173	883 946	159 166		

1 Mark ◇ in model nomenclature represents output shaft direction symbol H, V or W.
For details, please refer to Nomenclature page (Page 23).
2 Mark △ in model nomenclature represents motor capacity symbol.
3 Mark □ in frame size number represents "0" or "5".
4 ⁝.....⁝ in model nomenclature refers to the mounting position symbol.
For details please refer to pages 24 to 33.
5 Output bore diameters (keyed bores) are manufactured to H8 tolerances according to JIS B 0401-1976
6 Keyways are manufactured according to JIS B 1301-1976
(Parallel Key, Standard Class).
7 The weight values indicated in the tables are for hollow shaft units.
8 Dimensions and weights are subject to change without prior notice.

Frame#3 Size	Motor capacity kWx4P	AF Motor Capacity kWx4P	IE2 Motor Capicity kWx4P	J	DM	L (Std) L (Brake)	Weight (Std) Weight (Brake)	CF DC	GK GL GH
4C16 □	1.1			148	160	812 874	171 176	377 300	168 260 344
	1.5	0.75	0.75	148	160	812 874	171 176		
	2.2	1.5	1.1 1.5	155	173	827 890	174 180		
	3.0			166	212	850 922	185 194		
	3.7	2.2	2.2	166	212	850 922	185 194		
	5.5	3.7	3.0 3.7	166	212	894 966	192 203		
	7.5	5.5	5.5	211	251	922 1017	206 227		
	11	7.5	7.5	211	251	982 1077	220 240		
	15	11	11	262	324	1067 1199	278 316		
	18.5			340	394	1162 1357	353 413		
	22	15	15	340	394	1162 1357	354 414		
	30	22	22	340	394	1162 1357	376 430		
4C16DA	0.1			114	124	753 771	168 170	442 300	- 261 433
	0.2	0.1		114	124	778 810	169 171		
	0.25			114	124	778 810	169 171		
	0.4	0.2		114	124	798 830	170 172		
	0.55			141	151	839 882	173 176		
	0.75	0.4		141	151	839 882	173 176		
	1.1			148	160	872 934	177 182		
	1.5	0.75	0.75	148	160	872 934	177 182		
4C16DB	0.75	0.4		143	151	853 896	175 178	456 300	- 261 440
	1.1			148	160	886 948	179 184		
	1.5	0.75	0.75	148	160	886 948	179 184		
	2.2	1.5	1.1 1.5	155	173	906 969	218 225		
4C16DC		2.2	2.2	166	212	929 1001	240 245	458 300	- 261 441
4C17 □	11	7.5	7.5	211	251	1003 1098	245 263	393 340	186 289 358
	15	11	11	262	324	1083 1215	302 339		
	18.5	15	15	340	394	1178 1373	376 436		
	22	15	15	340	394	1178 1373	376 436		
	30	18.5 22	18.5 22	340	394	1178 1373	399 453		
	37	30	30	CONSULT US FOR DIMENSIONS					
	45	37	37						
	55	45	45						

Dimensional Drawings

Shaft Mounted Gearmotors

Examples:

3Ph Motors : L◇YM△ - 4D16□ ~ 4D18□ - ⋮⋮⋮ (-B) - Reduction Ratio
: L◇YM△ - 4D16DA ~ 4D17DC- ⋮⋮⋮ (-B)- Reduction Ratio
AF Motors : L◇YM△ - 4D16□ ~ 4D18□ -AV ⋮⋮⋮ (-B)- Reduction Ratio
: L◇YM△ - 4D16DA ~ 4D17DC -AV ⋮⋮⋮ (-B)- Reduction Ratio
IE2 Motors : L◇YM△ - 4D16□ ~ 4D18□ - ES ⋮⋮⋮ (-B)- Reduction Ratio
: L◇YM△ - 4D16DA ~ 4D17DC - ES ⋮⋮⋮ (-B)- Reduction Ratio

(Refer to Notes on Page 132)

Supplementary Dimensions:

Hollow Shaft with Flange Mount : L◇YM△ - .....- F1 / G1 - Reduction Ratio -->Page 137 - 138
Solid Shaft with Flange Mount : L◇FM△ - .....- F1 / G1 - Reduction Ratio --> Page 139 - 140
Solid Shaft with Foot Mount : L◇HM△ - .....- K1 - Reduction Ratio --> Page 141 - 142

Mounting Position **Y1**

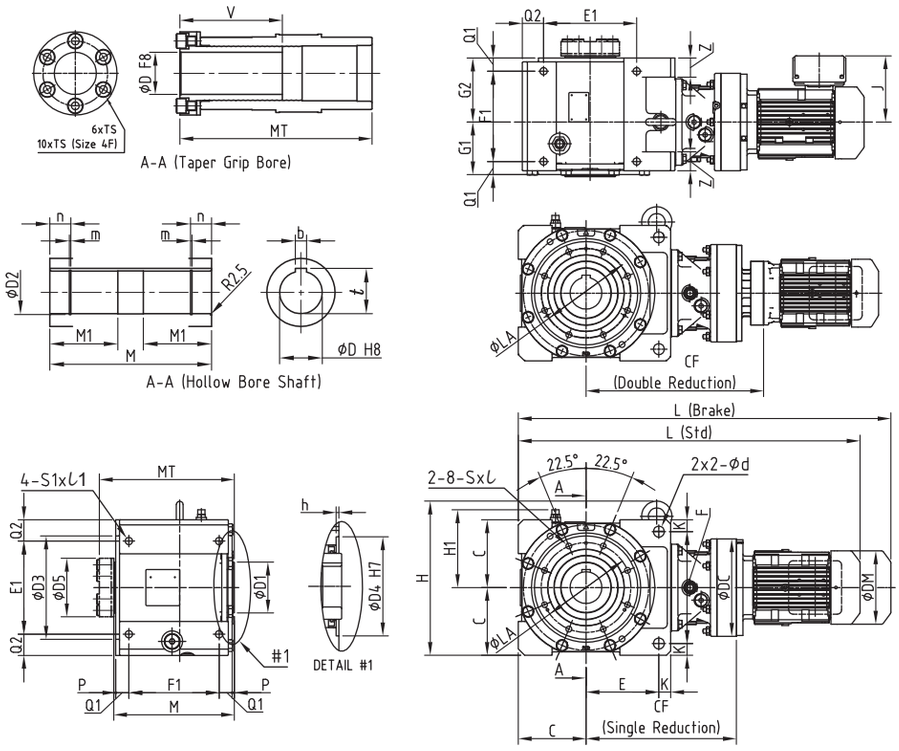

Mounting Position **Y2**

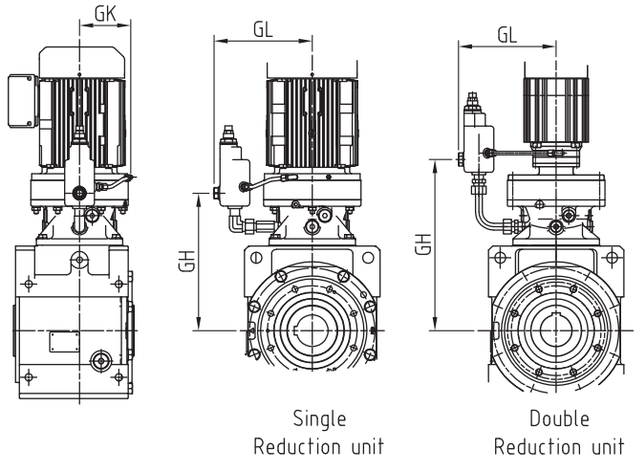

Note: Consult us for dimensions of mounting positions other than Y1 and Y2

Frame#3 Size	C E	F K	Z d	Q1 F1	Q2 E1	M MT	P	G1 G2	H H1	D b t	D1 D2 D3	M1 m n	V TS	LA	D4 h D5	S ℓ	S1 ℓ1
4D16 □																	
4D16DA																	
4D16DB																	
4D16DC																	
4D17 □	190 193	310 35	55 33	36 254	65 250	340 380	7	148 178	424 223	85 22 90.4	140 88.5 295	145 3.2 37	199 M16	255	210 5 152	M20 33	M24 40
4D17DA																	
4D17DB																	
4D17DC																	
4D18 □																	
4D18DA																	
4D18DB																	

Dimensional Drawings

Shaft Mounted Gearmotors

Frame#3 Size	Motor capacity kWx4P	AF Motor Capacity kWx4P	IE2 Motor Capicity kWx4P	J	DM	L (Std) L (Brake)	Weight (Std) Weight (Brake)	CF DC	GK GL GH
4D16 □	1.5	0.75	0.75	148	160	915 977	236 241	450 300	168 261 416
	2.2	1.5	1.5	155	173	930 993	239 245		
	3.0			166	212	953 1025	250 259		
	3.7	2.2	2.2	166	212	953 1025	250 259		
	5.5	3.7	3.0 3.7	166	212	997 1069	260 269		
	7.5	5.5	5.5	211	251	1025 1120	274 293		
	11	7.5	7.5	211	251	1085 1180	288 305		
	15	11	11	262	324	1170 1301	345 383		
	18.5			340	394	1265 1459	418 478		
	22	15	15	340	394	1265 1459	421 481		
4D16DA	0.1			114	124	855 873	235 237	514 300	- 261 505
	0.2	0.1		114	124	880 912	236 238		
	0.25			114	124	880 912	236 238		
	0.4	0.2		114	124	900 932	237 239		
	0.55			143	151	941 984	240 243		
	0.75	0.4		143	151	941 984	240 243		
	1.1			148	160	974 1036	244 249		
	1.5	0.75	0.75	148	160	974 1036	244 249		
4D16DB	0.75	0.4		143	151	955 988	243 246	528 300	- 261 512
	1.1			148	160	988 1050	246 251		
	1.5	0.75	0.75	148	160	988 1050	246 251		
	2.2	1.5	1.1 1.5	155	173	1008 1071	250 256		
4D16DC	1.5	0.75	0.75	148	160	990 1052	252 257	530 300	- 261 514
	3.0			166	212	1033 1105	266 276		
	3.7	2.2	2.2	166	212	1033 1105	266 276		
		3.7	3.0 3.7	166	212	1075 1147	361 371		
4D17 □	3.0			166	212	961 1033	270 279	443 340	186 289 408
	3.7	2.2	2.2	166	212	961 1033	270 279		
	5.5	3.7	3.0 3.7	166	212	1005 1077	277 286		
	7.5	5.5	5.5	211	251	1023 1118	293 313		
	11	7.5	7.5	211	251	1083 1178	307 325		
	15	11	11	262	324	1163 1295	364 402		
	18.5			340	394	1258 1453	436 496		
	22	15	15	340	394	1258 1453	438 498		
	30	18.5 22	18.5 22	340	394	1258 1453	461 515		
	37	30	30	CONSULT US FOR DIMENSIONS					
	45	37	37						
	55	45	45						
4D17DA	0.1			114	124	850 868	248 250	509 340	- 289 496
	0.2	0.1		114	124	875 907	244 251		
	0.25			114	124	875 907	244 251		
	0.4	0.2		114	124	895 927	250 252		
	0.55			143	151	936 979	253 256		
	0.75	0.4		143	151	936 979	253 256		
	1.1			148	160	969 1031	256 261		
	1.5	0.75	0.75	148	160	969 1031	256 261		

Frame#3 Size	Motor capacity kWx4P	AF Motor Capacity kWx4P	IE2 Motor Capicity kWx4P	J	DM	L (Std) L (Brake)	Weight (Std) Weight (Brake)	CF DC	GK GL GH
4D17DB	0.55			143	151	950 993	250 257	523 340	- 289 503
	0.75	0.4		143	151	950 993	250 257		
	1.1			148	160	983 1045	259 264		
	1.5	0.75	0.75	148	160	983 1045	259 264		
	2.2	1.5	1.1 1.5	155	173	1003 1066	263 269		
4D17DC	1.5			148	160	987 1049	264 270	527 340	- 289 508
	2.2	1.5	1.5	155	173	1007 1070	268 275		
	3.0			166	212	1030 1102	280 290		
	3.7	2.2	2.2	166	212	1030 1102	280 290		
		3.7	3.0 3.7	166	212	1074 1146	374 384		
4D18 □	3.0			166	212	964 1036	304 314	446 370	203 314 411
	3.7	2.2	2.2	166	212	964 1036	304 314		
	5.5	3.7	3.0 3.7	166	212	1008 1080	310 321		
	7.5	5.5	5.5	211	251	1026 1121	327 345		
	11	7.5	7.5	211	251	1086 1181	341 359		
	15	11	11	262	324	1166 1271	394 435		
	18.5			340	394	1261 1426	474 531		
	22	15	15	340	394	1261 1426	474 531		
	30	18.5 22	18.5 22	340	394	1261 1426	486 547		
	37	30#7	30#7	340	394	1376 1591	542 600		
	45	37#7	37#7	340	394	1376 1591	542 611		
	55	45	45	CONSULT US FOR DIMENSIONS					

1 Mark ◇ in model nomenclature represents output shaft direction symbol H, V or W.
For details, please refer to Nomenclature page (Page 23).
2 Mark △ in model nomenclature represents motor capacity symbol.
3 Mark □ in frame size number represents "0" or "5".
4 ⁝⁝⁝⁝⁝ in model nomenclature refers to the mounting position symbol.
For details please refer to pages 24 to 33.
5 Output bore diameters (keyed bores) are manufactured to H8 tolerances according to JIS B 0401-1976
6 Keyways are manufactured according to JIS B 1301-1976 (Parallel Key, Standard Class).
7 For dimensions of AF and IE 2 motors, please consult factory. The values in the table do not apply to these motors.
8 The weight values indicated in the tables are for hollow shaft units.
9 Dimensions and weights are subject to change without prior notice.

Dimensional Drawings

Shaft Mounted Gearmotors

Examples:

3Ph Motors : L◇YM△ - 4E17□ ~ 4E19□ - ⁝⁝⁝ (-B) - Reduction Ratio
: L◇YM△ - 4E17DA ~ 4E18DB- ⁝⁝⁝ (-B)- Reduction Ratio
AF Motors : L◇YM△ - 4E17□ ~ 4E19□ -AV ⁝⁝⁝ (-B)- Reduction Ratio
: L◇YM△ - 4E17DA ~ 4E18DB -AV ⁝⁝⁝ (-B)- Reduction Ratio
IE2 Motors : L◇YM△ - 4E17□ ~ 4E19□ - ES ⁝⁝⁝ (-B)- Reduction Ratio
: L◇YM△ - 4E17DA ~ 4E18DB - ES ⁝⁝⁝ (-B)- Reduction Ratio

(Refer to Notes on Page 134)

Supplementary Dimensions:

Hollow Shaft with Flange Mount : L◇YM△ - .....- F1 / G1 - Reduction Ratio -->Page 137 - 138
Solid Shaft with Flange Mount : L◇FM△ - .....- F1 / G1 - Reduction Ratio --> Page 139 - 140
Solid Shaft with Foot Mount : L◇HM△ - .....- K1 - Reduction Ratio --> Page 141 - 142

Mounting Position **Y1**

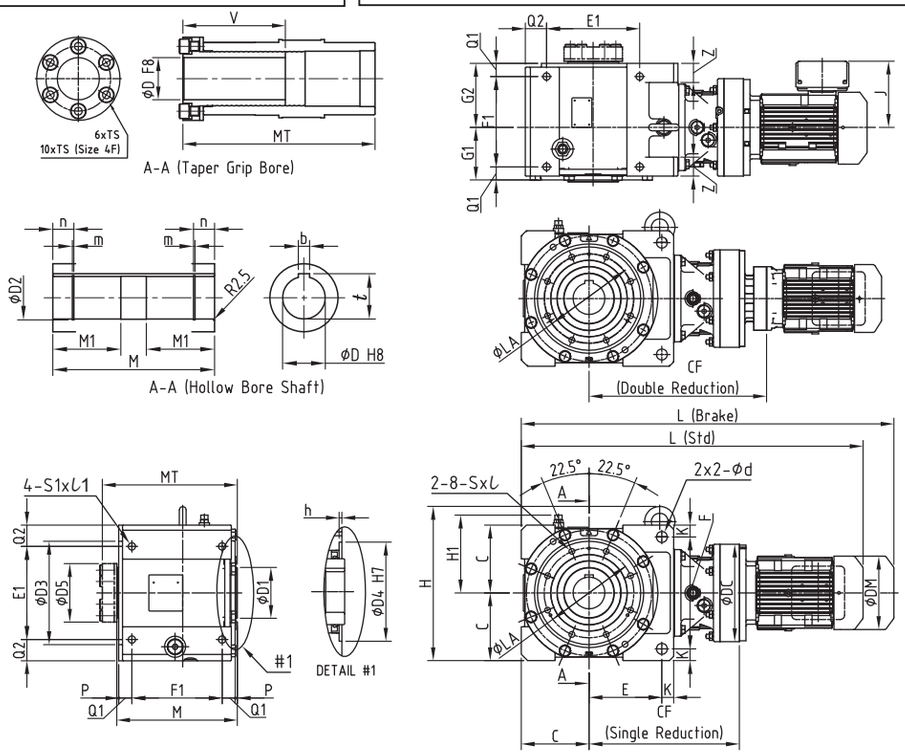

Mounting Position **Y2**

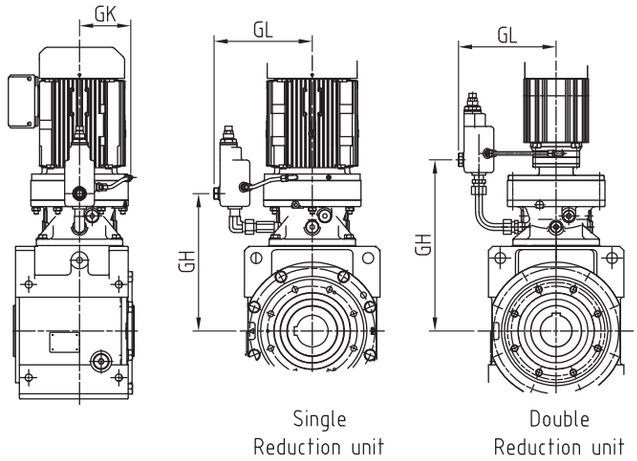

Note: Consult us for dimensions of mounting positions other than Y1 and Y2

Frame#3 Size	C E	F K	Z d	Q1 F1	Q2 E1	M MT	P	G1 G2	H H1	D b t	D1 D2 D3	M1 m n	V TS	LA	D4 h D5	S ℓ	S1 ℓ1
4E17 □	215 230	360 35	55 33	38 283	65 300	373 415	7	156 203	498 248	100 28 106.4	160 103.5 320	165 3.2 37	200 M16	280	240 5 170	M20 35	M24 40
4E17DA																	
4E17DB																	
4E17DC																	
4E18 □																	
4E18DA																	
4E18DB																	
4E19 □																	

Dimensional Drawings

Shaft Mounted Gearmotors

Frame#3 Size	Motor capacity kWx4P	AF Motor Capacity kWx4P	IE2 Motor Capicity kWx4P	J	DM	L (Std) L (Brake)	Weight (Std) Weight (Brake)	CF DC	GK GL GH
4E17 □	3.0			166	212	1011 1083	343 352	468 340	186 289 433
	3.7	2.2	2.2	166	212	1011 1083	343 352		
	5.5	3.7	3.7	166	212	1055 1127	350 359		
	7.5	5.5	5.5	211	251	1073 1168	368 385		
	11	7.5	7.5	211	251	1133 1228	382 399		
	15	11	11	262	324	1213 1345	436 472		
	18.5			340	394	1308 1503	509 569		
	22	15	15	340	394	1308 1503	509 569		
	30	18.5 22	18.5 22	340	394	1308 1503	532 586		
4E17DA	0.1			114	124	900 918	322 324	534 340	- 289 521
	0.2	0.1		114	124	925 957	323 325		
	0.25			114	124	925 957	323 325		
	0.4	0.2		114	124	945 977	324 326		
	0.55			143	151	986 1029	327 330		
	0.75	0.4		143	151	986 1029	327 330		
	1.1			148	160	1019 1081	330 335		
	1.5	0.75	0.75	148	160	1019 1081	330 335		
		1.5	1.1 1.5	155	173	1053 1116	334 340		
4E17DB	0.75	0.4		143	151	1000 1043	324 331	548 340	- 289 528
	1.1			148	160	1033 1095	333 338		
	1.5	0.75	0.75	148	160	1033 1095	333 338		
	2.2	1.5	1.5	155	173	1053 1116	337 343		
4E17DC	1.5	0.75	0.75	148	160	1037 1099	338 343	552 340	- 289 533
	2.2	1.5	1.5	155	173	1057 1120	342 349		
	3.0			166	212	1080 1152	354 364		
	3.7	2.2	2.2	166	212	1080 1152	354 364		
	5.5	3.7	3.7	166	212	1124 1196	361 371		
4E18 □	3.0			166	212	1014 1086	387 397	471 370	203 314 436
	3.7	2.2	2.2	166	212	1014 1086	387 397		
	5.5	3.7	3.0 3.7	166	212	1058 1130	393 404		
	7.5	5.5	5.5	211	251	1076 1171	410 428		
	11	7.5	7.5	211	251	1136 1231	424 442		
	15	11	11	262	324	1216 1321	477 518		
	18.5			340	394	1311 1476	557 614		
	22	15	15	340	394	1311 1476	557 614		
	30	18.5 22	18.5 22	340	394	1311 1476	569 630		
	37	30#7	30#7	340	394	1426 1641	625 683		
	45	37#7	37#7	340	394	1426 1641	625 694		
	55	45#7	45#7	CONSULT US FOR DIMENSIONS					

Frame#3 Size	Motor capacity kWx4P	AF Motor Capacity kWx4P	IE2 Motor Capicity kWx4P	J	DM	L (Std) L (Brake)	Weight (Std) Weight (Brake)	CF DC	GK GL GH
4E18DA	0.2	0.1		114	124	947 979	368 370	556 370	- 314 536
	0.25			114	124	947 979	368 370		
	0.4	0.2	0.2	114	124	967 999	369 371		
	0.55			143	151	1008 1051	373 376		
	0.75	0.4	0.4	143	151	1008 1051	373 376		
	1.1			148	160	1041 1103	377 382		
	1.5	0.75	0.75	148	160	1041 1103	377 382		
	2.2	1.5	1.1 1.5	155	173	1061 1124	381 387		
	3.0	2.2	2.2	166	212	1120 1192	393 404		
4E18DB	1.1			148	160	1063 1125	391 396	556 370	- 314 522
	1.5	0.75	0.75	148	160	1063 1125	391 396		
	2.2	1.5	1.1 1.5	155	173	1083 1146	395 402		
	3.0			166	212	1106 1178	405 414		
	3.7	2.2	2.2	166	212	1106 1178	405 414		
	5.5	3.7	3.0 3.7	166	212	1150 1222	411 422		
		5.5	5.5	211	251	1173 1268	427 446		
4E19 □	7.5	5.5	5.5	211	251	1110 1205	451 470	490 430	233 355 450
	11	7.5	7.5	211	251	1170 1265	465 484		
	15	11	11	262	324	1235 1340	518 558		
	18.5			340	394	1330 1495	601 655		
	22	15	15	340	394	1330 1495	601 655		
	30	18.5 22	18.5 22	340	394	1330 1495	612 666		
	37	30#7	30#7	340	394	1445 1660	667 725		
	45	37#7	37#7	340	394	1445 1660	667 736		
	55	45#7	45#7	390	484	1500 1695	762 850		

1 Mark ◇ in model nomenclature represents output shaft direction symbol H, V or W.
For details, please refer to Nomenclature page (Page 23).
2 Mark △ in model nomenclature represents motor capacity symbol.
3 Mark □ in frame size number represents "0" or "5".
4 ⁝⁝⁝⁝ in model nomenclature refers to the mounting position symbol.
For details please refer to pages 24 to 33.
7 For dimensions of AF and IE 2 motors, please consult factory. The values in the table do not apply to these motors.
8 The weight values indicated in the tables are for hollow shaft units.
9 Dimensions and weights are subject to change without prior notice.

Dimensional Drawings

Shaft Mounted Gearmotors

Examples:

3Ph Motors : L◇YM△ - 4F18□ ~ 4F19□ - ⁝⁝⁝ (-B) - Reduction Ratio
: L◇YM△ - 4F18DA ~ 4F19DB- ⁝⁝⁝ (-B)- Reduction Ratio
AF Motors : L◇YM△ - 4F18□ ~ 4F19□ -AV ⁝⁝⁝ (-B)- Reduction Ratio
: L◇YM△ - 4F18DA ~ 4F19DB -AV ⁝⁝⁝ (-B)- Reduction Ratio
IE2 Motors : L◇YM△ - 4F18□ ~ 4F19□ - ES ⁝⁝⁝ (-B)- Reduction Ratio
: L◇YM△ - 4F18DA ~ 4F19DB - ES ⁝⁝⁝ (-B)- Reduction Ratio

(Refer to Notes on Page 136)

Supplementary Dimensions:

Hollow Shaft with Flange Mount : L◇YM△ - .....- F1 / G1 - Reduction Ratio -->Page 137 - 138
Solid Shaft with Flange Mount : L◇FM△ - .....- F1 / G1 - Reduction Ratio --> Page 139 - 140
Solid Shaft with Foot Mount : L◇HM△ - .....- K1 - Reduction Ratio --> Page 141 - 142

Mounting Position **Y1**

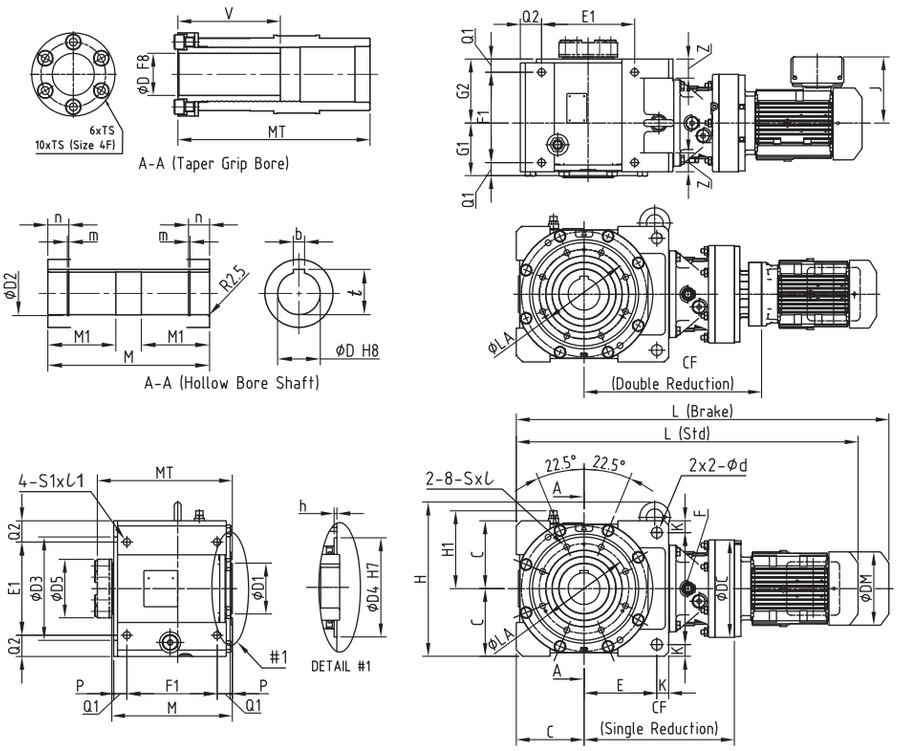

Mounting Position **Y2**

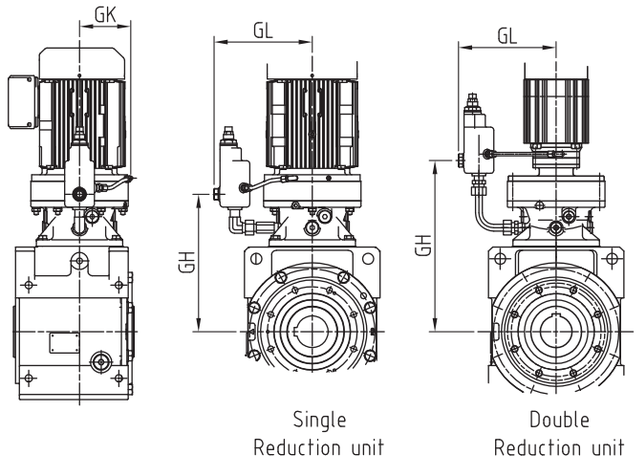

Note: Consult us for dimensions of mounting positions other than Y1 and Y2

Frame#3 Size	C E	F K	Z d	Q1 F1	Q2 E1	M MT	P	G1 G2	H H1	D b t	D1 D2 D3	M1 m n	V TS	LA	D4 h D5	S ℓ	S1 ℓ1
4F18 □	240	252	70 39	50.5 320	70 340	435 *1	7	238 183	590 273	120 32 127.4	180 124 370	194 4.2 49	*1	320	260 5 *1	M24 50	M30 50
4F18DA																	
4F18DB																	
4F19 □																	
4F19DA																	
4F19DB																	

*1: Consult Sumitomo

Dimensional Drawings

Shaft Mounted Gearmotors

Frame#3 Size	Motor capacity kWx4P	AF Motor Capacity kWx4P	IE2 Motor Capicity kWx4P	J	DM	L (Std) L (Brake)	Weight (Std) Weight (Brake)	CF DC	GK GL GH
4F18 □	3.0			166	212	1103 1175	584 594	535 370	203 314 499
	3.7			166	212	1103 1175	584 594		
	5.5			166	212	1147 1219	590 601		
	7.5	5.5	5.5	211	251	1165 1260	607 625		
	11	7.5	7.5	211	251	1225 1320	621 639		
	15	11	11	262	324	1305 1410	674 715		
	18.5			340	394	1400 1565	754 811		
	22	15	15	340	394	1400 1565	754 811		
	30	18.5 22	18.5 22	340	394	1400 1565	766 827		
	37	30#7	30#7	340	394	1515 1730	822 880		
	45	37#7	37#7	340	394	1515 1730	822 891		
	55	45#7	45#7	CONSULT US FOR DIMENSIONS					
4F18DA	0.2			114	124	1035 1067	544 545	619 370	- 314 599
	0.25			114	124	1035 1067	544 545		
	0.4	0.2		114	124	1055 1087	545 547		
	0.55			143	151	1096 1139	549 552		
	0.75	0.4		143	151	1096 1139	549 552		
	1.1			148	160	1129 1191	553 558		
	1.5	0.75	0.75	148	160	1129 1191	553 558		
	2.2	1.5	1.1 1.5	155	173	1149 1212	557 563		
	3.0			166	212	1208 1280	569 580		
	3.7	2.2	2.2	166	212	1208 1280	569 580		
4F18DB	1.1			148	160	1151 1213	566 571	641 370	- 314 615
	1.5	0.75	0.75	148	160	1151 1213	566 571		
	2.2	1.5	1.1 1.5	155	173	1171 1234	570 577		
	3.0			166	212	1194 1266	721 730		
	3.7	2.2	2.2	166	212	1194 1266	580 589		
	5.5	3.7	3.0 3.7	166	212	1238 1310	586 597		
	7.5	5.5	5.5	211	251	1261 1356	602 621		
		7.5	7.5	211	251	1321 1416	655 695		
4F19 □	3.7			CONSULT US FOR DIMENSIONS				552 430	233 355 512
	5.5	3.7	3.7	166	212	1184 1256	631 642		
	7.5	5.5	5.5	211	251	1197 1292	645 664		
	11	7.5	7.5	211	251	1257 1352	659 678		
	15	11	11	262	324	1322 1427	712 752		
	18.5			340	394	1417 1582	795 849		
	22	15	15	340	394	1417 1582	795 849		
	30	18.5 22	18.5 22	340	394	1417 1582	806 860		
	37	30#7	30#7	340	394	1532 1747	861 919		
	45	37#7	37#7	340	394	1532 1747	861 930		
	55	45#7	45#7	390	484	1587 1782	956 1044		

Frame#3 Size	Motor capacity kWx4P	AF Motor Capacity kWx4P	IE2 Motor Capicity kWx4P	J	DM	L (Std) L (Brake)	Weight (Std) Weight (Brake)	CF DC	GK GL GH
4F19DA	0.25	1.5	1.5	114	124	1064 1096	593 594	643 430	- 355 624
	0.4	0.2		114	124	1084 1116	594 596		
	0.55			141	151	1120 1163	597 600		
	0.75	0.4		141	151	1120 1163	597 600		
	1.1			148	160	1153 1215	600 605		
	1.5	0.75	0.75	148	160	1153 1215	600 605		
	2.2	1.5	1.1 1.5	155	173	1173 1236	604 611		
	3.0			166	212	1196 1268	615 624		
	3.7	2.2	2.2	166	212	1196 1268	615 624		
	5.5	3.0 3.7	3.0 3.7	166	212	1240 1312	621 631		
		5.5	5.5	211	251	1268 1363	636 655		
4F19DB	2.2	1.5	1.5	155	173	1189 1252	609 616	659 430	- 355 633
	3.0			166	212	1212 1284	619 628		
	3.7	2.2	2.2	166	212	1212 1284	619 628		
	5.5	3.7	3.0 3.7	166	212	1256 1328	625 636		
	7.5	5.5	5.5	211	251	1279 1374	641 660		
		7.5	7.5	211	251	1339 1434	655 674		

1 Mark ◇ in model nomenclature represents output shaft direction symbol H, V or W.
For details, please refer to Nomenclature page (Page 23).
2 Mark △ in model nomenclature represents motor capacity symbol.
3 Mark □ in frame size number represents "0" or "5" .
4 ⁝.....⁝ in model nomenclature refers to the mounting position symbol.
For details please refer to pages 24 to 33.
5 Output bore diameters (keyed bores) are manufactured to H8 tolerances according to J IS B 0401-1976
6 Keyways are manufactured according to JIS B 1301-1976 (Parallel Key, Standard Class).
7 For dimensions of AF and IE 2 motors, please consult factory. The values in the table do not apply to these motors.
8 The weight values indicated in the tables are for hollow shaft units.
9 Dimensions and weights are subject to change without prior notice.

Dimensional Drawings

Supplementary Dimensions - Hollow Shaft with Flange Mount

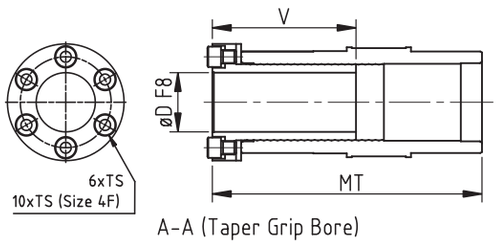

A-A (Taper Grip Bore)

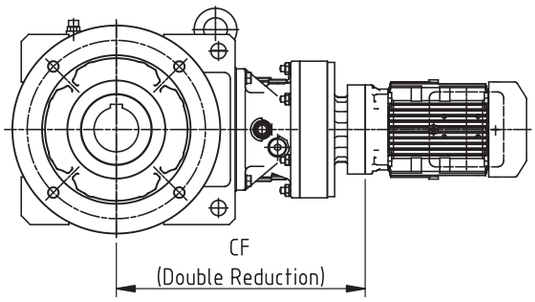

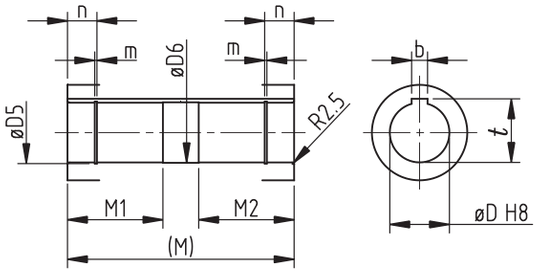

A-A (Hollow Bore Shaft)

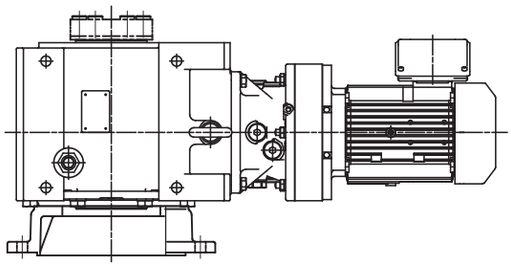

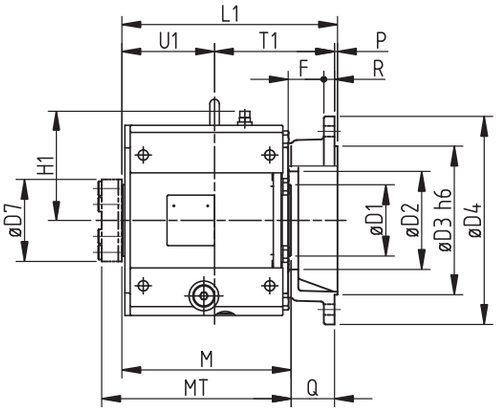

LHYM...□...F1

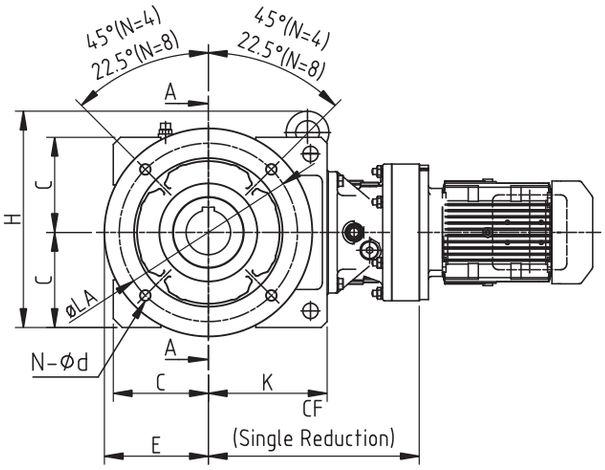

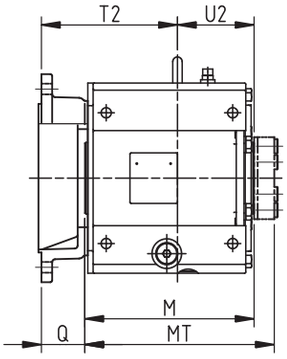

LHYM...□...G1

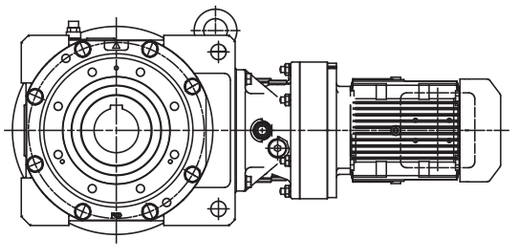

Dimensional Drawings

Supplementary Dimensions - Hollow Shaft and Flange Mount

Frame#3 Size	C E	K	N d	M MT Q	L1	F R	U1 T1 P	U2 T2	H H1	D1 D2 D3	D4 D5 D6	D7 V TS	D b t	M1 M2	m n	LA
4A10 □ 4A10DA 4A11 □ 4A12 □ 4A12DA 4A12DB 4A14 □	110 125	132	4 14	216 245 60	280	50 15	115.5 160.5 4	100.5 176	276 141	85 120 180	250 58 56	104 130 M12	55 16 59.3	85 85	30 2.2	215
4B12 □ 4B12DA 4B12DB 4B14 □ 4B14DA 4B14DB 4B16 □	130 150	165	4 14	259 291 61	324	50 16	132 168 4	127 193	306 161	100 140 230	300 68 66	114 145 M12	65 18 69.4	100 100	30 2.7	265
4C14 □ 4C14DA 4C14DB 4C14DC 4C16 □ 4C16DA 4C16DB 4C17 □	160 175	200	4 18	285 320 73	363	60 18	156 202 5	129 229	364 193	120 165 250	350 78 76	138 170 M16	75 20 79.9	120 120	37 2.7	300
4D16 □ 4D16DA 4D16DB 4D16DC 4D17 □ 4D17DA 4D17DB 4D17DC 4D18 □ 4D18DA 4D18DB	190 225	228	8 18	340 380 80	425	65 22	185 235 5	155 265	424 223	140 195 350	450 88.5 86	152 199 M16	85 22 90.4	145 145	37 3.2	400
4E17 □ 4E17DA 4E17DB 4E17DC 4E18 □ 4E18DA 4E18DB 4E19 □	215 225	265	8 18	373 415 80	458	65 22	210 243 5	170 290	498 248	160 220 350	450 103.5 101	170 200 M16	100 28 106.4	165 165	37 3.2	400
4F18 □ 4F18DA 4F18DB 4F19 □ 4F19DA 4F19DB	240 330	297	8 24	435 486 65	505	48 24	245 255 5	190 310	590 273	180 240 550	660 124 121	186 248 M16	120 32 127.4	194 189	49 4.2	600

Add below weigth values to the weights shown on dimension tables on page 125 to 136 for Hollow Shaft with Flange Mount models.

Size	Additional Weight (Kg)
4A·····	8
4B·····	12
4C·····	17
4D·····	27
4E·····	29
4F·····	75

1 The dimensions in the above tables should be taken together with dimensions on pages 125 to 136.
2 The weight values indicated in the above tables are additional weights for hollow shaft with flange mount types; and must be added to the weights of the units indicated in pages 125 to 135.
3 Mark □ in frame size number represents "0" or "5".
4 For correct nomenclature, please refer to Page 23.
5 Dimensions and weights are subject to change without prior notice.

Dimensional Drawings

Supplementary Dimensions - Solid Shaft with Flange Mount

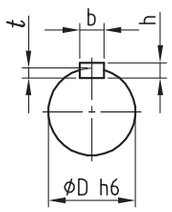

A-A
(Solid Shaft)

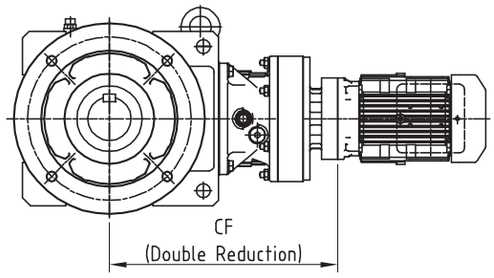

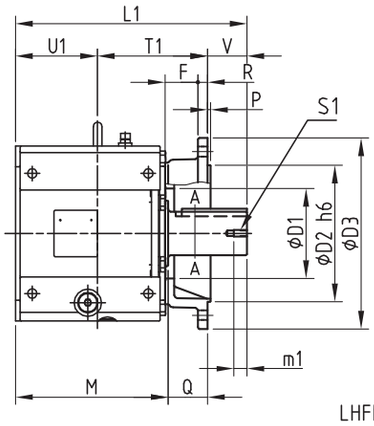

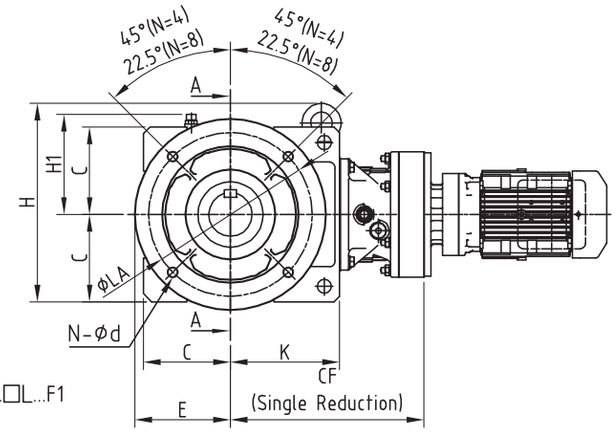

LHFM...□L...F1

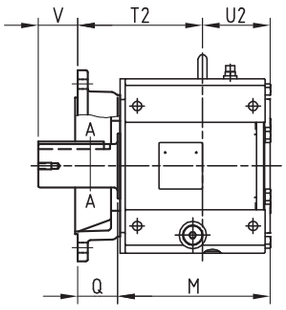

LHFM...□R...G1

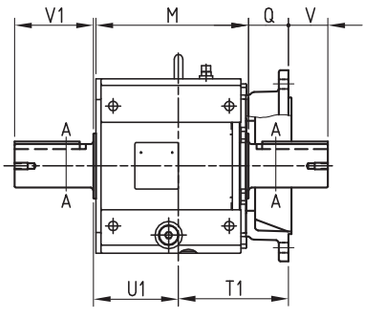

LHFM...□T...F1

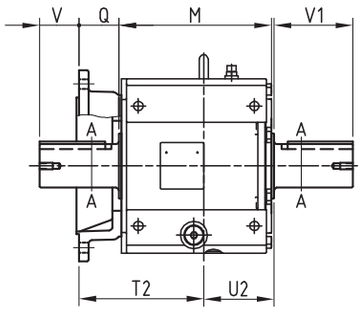

LHFM...□T...G1

Supplementary Dimensions - Solid Shaft with Flange Mount

Frame#3 Size	C E	K	N d	M Q	L1	F R P	U1 T1	U2 T2	H H1	D1 D2 D3	D	b h t	V V1	LA
4A10 □ 4A10DA 4A11 □ 4A12 □ 4A12DA 4A12DB 4A14 □	110 125	132	4 14	216 60	306	50 15 4	115.5 160.5	100.5 176	276 141	120 180 250	50	14 9 5.5	30 90	215
4B12 □ 4B12DA 4B12DB 4B14 □ 4B14DA 4B14DB 4B16 □	130 150	165	4 14	245 61	369	50 16 4	127 188	122 193	306 161	140 230 300	65	18 11 7	54 115	265
4C14 □ 4C14DA 4C14DB 4C14DC 4C16 □ 4C16DA 4C16DB 4C17 □	160 175	200	4 18	285 73	425	60 18 5	151 202	129 229	364 193	165 250 350	80	22 14 9	72 145	300
4D16 □ 4D16DA 4D16DB 4D16DC 4D17 □ 4D17DA 4D17DB 4D17DC 4D18 □ 4D18DA 4D18DB	190 225	228	8 18	333 80	503	65 22 5	178 235	155 265	424 223	195 350 450	95	25 14 9	90 170	400
4E17 □ 4E17DA 4E17DB 4E17DC 4E18 □ 4E18DA 4E18DB 4E19 □	215 225	265	8 18	373 80	566	65 22 5	203 243	170 290	498 248	220 350 450	110	28 16 10	120 200	400
4F18 □ 4F18DA 4F18DB 4F19 □ 4F19DA 4F19DB	240 330	297	8 24	428 65	638	48 24 5	238 255	190 310	590 273	240 550 660	130	32 18 11	145 210	600

Add below weigth values to the weights shown on dimension tables on page 125 to 136 for Solid Shaft with Flange Mount Units.

Size	Additional Weight Output Shaft One side (L,R) (kg)	Additional Weight Output Shaft Both side (T) (kg)
4A·····	12	15
4B·····	20	27
4C·····	29	39
4D·····	46	60
4E·····	59	82
4F·····	125	157

1 The dimensions in the above tables should be taken together with dimensions on pages 125 to 136.
2 The weight values indicated in the above tables are additional weights for solid shaft with flange mount types; and must be added to the weights of the units indicated in pages 125 to 135.
3 Mark □ in frame size number represents "0" or "5".
4 For correct nomenclature, please refer to Page 23.
5 Output shaft diameters are manufactured to h6 tolerances according to JIS B 0401-1976.
6 Keyways are manufactured according to JIS B 1301-1976 (Parallel Key, Standard Class).
7 Dimensions and weights are subject to change without prior notice.

Dimensional Drawings

Supplementary Dimensions - Solid Shaft with Foot Mount

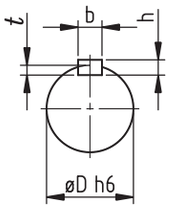

A-A
(Solid Shaft)

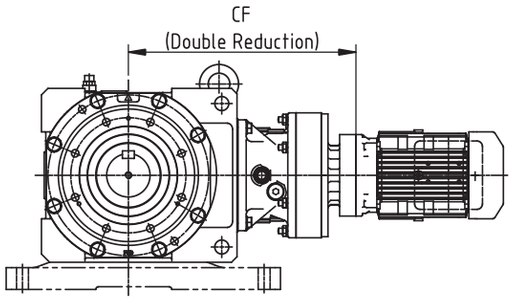

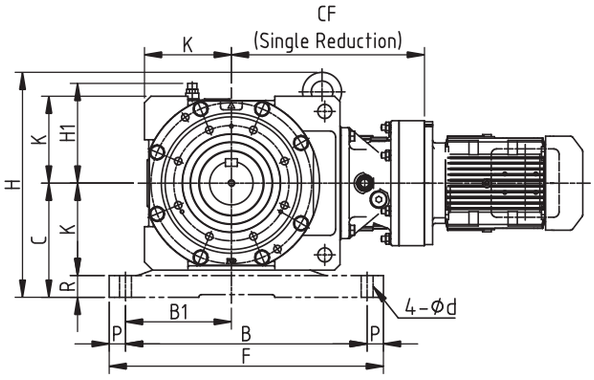

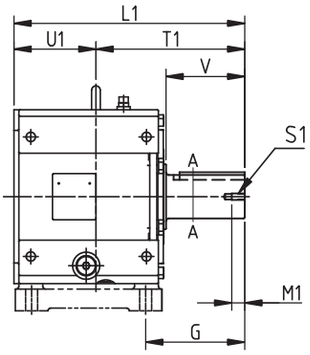

LHHM...□L...K1

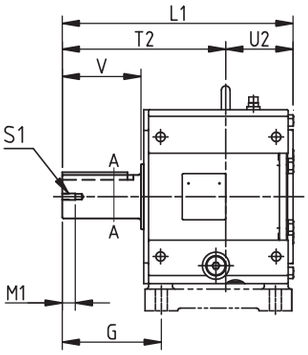

LHHM...□R...K1

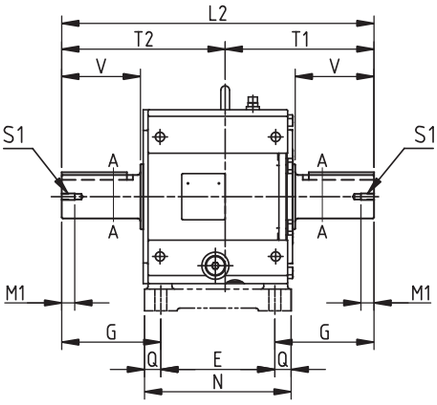

LHHM...□T...K1

Supplementary Dimensions - Solid Shaft with Foot Mount

Frame#3 Size	C K	B1 p	F B	d	N E	G Q	S1 M1	U1 T1	U2 T2	H H1	D	b h t	V	ℓ1 ℓ2
4A10 □ 4A10DA 4A11 □ 4A12 □ 4A12DA 4A12DB 4A14 □	140 110	135 20	320 280	14	202 160	118 21	M10 20	110.5 190.5	95 206	306 141	50	14 9 5.5	90	301 396.5
4B12 □ 4B12DA 4B12DB 4B14 □ 4B14DA 4B14DB 4B16 □	170 130	160 20	385 345	18	245 195	147 25	M12 24	127 242	122 247	346 161	65	18 11 7	115	369 489
4C14 □ 4C14DA 4C14DB 4C14DC 4C16 □ 4C16DA 4C16DB 4C17 □	210 160	195 30	505 445	22	270 210	182.5 30	M12 24	151 274	124 301	414 193	80	22 14 9	145	425 575
4D16 □ 4D16DA 4D16DB 4D16DC 4D17 □ 4D17DA 4D17DB 4D17DC 4D18 □ 4D18DA 4D18DB	245 190	235 30	560 500	26	320 260	210 30	M20 40	178 325	148 355	479 223	95	25 14 9	170	503 680
4E17 □ 4E17DA 4E17DB 4E17DC 4E18 □ 4E18DA 4E18DB 4E19 □	275 215	270 35	650 580	33	355 280	247 37.5	M20 40	203 363	156 410	558 248	110	28 16 10	200	566 773
4F18 □ 4F18DA 4F18DB 4F19 □ 4F19DA 4F19DB	320 240	300 35	740 670	33	400 320	268 40	M20 45	238 400	183 455	670 273	130	32 18 11	210	638 855

Add below weigth values to the weights shown on dimension tables on page 125 to 136 for Solid Shaft with Foot Mount Units.

Size	Additional Weight Output Shaft One side (L,R) (kg)	Additional Weight Output Shaft Both side (T) (kg)
4A·····	14	17
4B·····	27	34
4C·····	43	53
4D·····	65	79
4E·····	91	114
4F·····	155	187

1 The dimensions in the above tables should be taken together with dimensions on pages 125 to 136.
2 The weight values indicated in the above tables are additional weights for solid shaft with flange mount types; and must be added to the weights of the units indicated in pages 125 to 135.
3 Mark □ in frame size number represents "0" or "5".
4 For correct nomenclature, please refer to Page 23.
5 Output shaft diameters are manufactured to h6 tolerances according to JIS B 0401-1976.
6 Keyways are manufactured according to JIS B 1301-1976 (Parallel Key, Standard Class).
7 Dimensions and weights are subject to change without prior notice.

Selection Tables for Reducers

Important Notes :

Following notes must be considered when using selection tables from page 145 to 197.

1. For the nomenclature of models listed on the selection table, refer to page 23.
2. Consult us if the mounting position is Y4, F4, G4, K4 or W4 (motor is faced down), because these selection tables are not applicable.
3. Allowable duty cycle of models with ※ mark in the model column is 75% ED (10 min. cycle) in case of mounting positions Y2, F2, G2, K2, V2 or W2.
4. For the allowable radial load of the input shaft, refer to pages 44 and 45.
5. In "Allowable Radial Load of Output Shaft (Pro)" column the values for hollow shaft type are those at 20mm from the shaft end face, and the values for solid shaft type are those at the midpoint of the output shaft. If the load position is other than these, or for the allowable thrust load, refer to pages 37 to 45.
6. The lubrication method depends on the model. For details, refer to "Lubrication" on pages 226 to 228.
7. The output shaft speeds (n_2) are based on input speed (n_1).
8. The reduction ratios are nominal. The output speed values (n_2) are calculated based on the actual reduction ratios. (The output speeds in case of reduction ratios 11 to 18 are calculated based on the nominal reduction ratios because the actual ratio of 11 to 18 depends on the frame size). For the actual reduction ratios, refer to page 9.
9. Calculate the gearbox rating for speed not listed in the selection tables by interpolation method
10. Consult us for the combinations and reduction ratios not listed in the selection tables.
11. The contents of the tables are subject to change without prior notice.

Selection Tables for 60Hz Input

1750 rpm - 4 poles
1165 rpm - 6 poles
870 rpm - 8 poles
580 rpm - 12 poles

Size	Page
4A □	145
4B □	149
4C □	153
4D □	156
4E □	159
4F □	162

Selection Tables for 50Hz Input

1450 rpm - 4 poles
980 rpm - 6 poles
720 rpm - 8 poles
50 rpm - Low Input Speed

Size	Page
4A □	166
4B □	170
4C □	174
4D □	177
4E □	181
4F □	184

Selection Tables for Low Speed Reducers

(Ratio from 364 to 10658)

1450 rpm - 4P - 50 Hz
1750 rpm - 4P - 60 Hz

Size	Page
4A □	188
4B □	189
4C □	190
4D □	191
4E □	194
4F □	196

Selection Tables for Reducers (60Hz Input)

■ **IMPORTANT**: Please refer to page 144 for Reducer Selection Table notes.

Refer to Page 166-187 for 50 Hz Input

Size	n1	1750				1165				870				580			
	Ratio i	n2 [rpm]	P1 [kW]	Tout [Nm]	Pro [N]	n2 [rpm]	P1 [kW]	Tout [Nm]	Pro [N]	n2 [rpm]	P1 [kW]	Tout [Nm]	Pro [N]	n2 [rpm]	P1 [kW]	Tout [Nm]	Pro [N]
4A100 [Dimension Drawings from page 198]	11	159.1	2.4	124	16500	106.0	2.4	186	18400	79.1	2.4	250	19900	52.8	1.9	290	22400
	13	134.7	2.4	151	17500	89.7	2.4	227	19400	67.0	2.4	304	20900	44.7	1.9	353	23500
	14	125.0	2.4	165	17900	83.3	2.4	249	19900	62.2	2.4	333	21400	41.5	1.9	386	24100
	16	109.4	2.4	189	18500	72.9	2.4	284	20500	54.4	2.4	381	22000	36.3	1.9	442	24800
	18	97.3	2.4	207	19000	64.8	2.4	311	21000	48.4	2.4	416	22500	32.3	1.9	483	25300
	19	92.2	2.0	227	19400	61.4	2.0	341	21500	45.8	2.0	457	23000	30.6	2.0	530	25600
	21	83.4	2.4	248	19900	55.5	2.4	373	21900	41.5	2.4	499	23400	27.7	1.9	580	25200
	26	67.4	2.4	303	20900	44.9	2.4	455	23000	33.5	2.4	609	24500	22.4	1.9	723	24000
	28	62.5	2.4	331	21300	41.7	2.4	497	23400	31.1	2.4	666	24500	20.8	1.9	793	23200
	35	50.0	2.4	416	22500	33.3	2.4	625	24600	24.9	2.2	776	23400	16.6	1.5	776	23400
	39	44.9	2.4	455	23000	29.9	2.4	684	24400	22.4	2.2	849	22500	14.9	1.5	849	22500
	42	41.7	2.4	492	23400	27.8	2.4	739	23800	20.8	1.9	775	23400	13.9	1.2	777	23400
	46	38.1	2.4	537	23800	25.4	2.4	808	23100	19.0	1.9	849	22500	12.7	1.3	849	22500
	48	36.5	2.4	568	24100	24.3	2.1	776	23400	18.2	1.6	777	23400	12.1	1.1	780	23400
	53	33.1	2.4	620	24600	22.0	2.2	849	22500	16.5	1.6	849	22500	11.0	1.1	849	22500
	54	32.5	2.0	545	25300	21.6	1.9	777	23400	16.2	1.4	776	23400	10.8	0.9	776	23400
	60	29.2	2.0	594	25100	19.5	1.9	849	22500	14.5	1.5	849	22500	9.7	1.0	849	22500
	67	26.2	2.0	651	24600	17.4	1.6	776	23400	13.0	1.2	776	23400	8.7	0.8	776	23400
	74	23.7	2.0	712	24100	15.8	1.6	849	22500	11.8	1.2	849	22500	7.9	0.8	849	22500
	80	21.9	1.3	511	25700	14.6	1.3	768	23500	10.9	1.0	776	23400	7.3	0.7	776	23400
	88	19.9	1.3	559	25400	13.3	1.3	840	22700	9.9	1.0	849	22500	6.6	0.7	849	22500
	93	18.9	1.2	565	25300	12.6	1.1	779	23400	9.4	0.8	777	23400	6.3	0.6	776	23400
	102	17.2	1.3	618	24900	11.5	1.2	849	22500	8.6	0.9	849	22500	5.7	0.6	849	22500
	112	15.7	1.0	549	25500	10.4	1.0	776	23400	7.8	0.7	776	23400	5.2	0.5	776	23400
	123	14.3	1.0	601	25100	9.5	1.0	849	22500	7.1	0.7	849	22500	4.8	0.5	849	22500
	138	12.7	0.8	540	25500	8.5	0.8	777	23400	6.3	0.6	777	23400	4.2	0.4	777	23400
	151	11.6	0.8	591	25100	7.8	0.8	849	22500	5.8	0.6	849	22500	3.9	0.4	849	22500
	163	10.8	0.6	460	26000	7.2	0.6	691	24300	5.4	0.5	776	23400	3.6	0.4	775	23400
	179	9.8	0.6	503	25800	6.6	0.6	756	23600	4.9	0.5	849	22500	3.3	0.4	849	22500
	189	9.3	0.5	490	25900	6.2	0.5	736	23800	4.6	0.4	776	23400	3.1	0.4	777	23400
	207	8.5	0.6	536	25600	5.7	0.6	805	23100	4.2	0.5	849	22500	2.8	0.3	849	22500
	227	7.8	0.4	498	25800	5.2	0.4	749	23700	3.9	0.3	777	23400	2.6	0.2	776	23400
	249	7.1	0.5	545	25500	4.7	0.5	819	22900	3.5	0.4	849	22500	2.4	0.3	849	22500
	278	6.3	0.4	607	25000	4.2	0.4	776	23400	3.2	0.3	778	23400	2.1	0.2	778	23400
	305	5.8	0.5	664	24500	3.9	0.4	849	22500	2.9	0.3	849	22500	1.9	0.2	849	22500
4A105 [Dimension Drawings from page 198]	11	159.1	3.2	168	16300	106.0	3.2	252	18100	79.1	2.8	290	19700	52.8	1.9	290	22400
	13	134.7	3.2	205	17200	89.7	3.2	308	19000	67.0	2.8	353	20600	44.7	1.9	353	23500
	14	125.0	3.2	224	17600	83.3	3.2	336	19400	62.2	2.8	386	21100	41.5	1.9	386	24100
	16	109.4	3.2	256	18100	72.9	3.2	385	20000	54.4	2.8	442	21700	36.3	1.9	442	24800
	18	97.3	3.2	280	18600	64.8	3.2	421	20400	48.4	2.8	483	22100	32.3	1.9	483	25300
	19	92.2	3.2	307	19000	61.4	3.2	461	20800	45.8	2.7	530	22600	30.6	1.8	530	25600
	21	83.4	3.2	336	19400	55.5	3.2	505	21200	41.5	2.8	580	23000	27.7	1.9	580	25200
	26	67.4	3.2	410	20300	44.9	3.2	615	22100	33.5	2.5	658	24200	22.4	1.9	723	24000
	28	62.5	3.2	448	20700	41.7	3.2	673	22500	31.1	2.6	720	24000	20.8	1.9	793	23200
	35	50.0	3.2	563	21700	33.3	3.2	846	22600	24.9	2.7	930	21400	16.6	1.8	955	21100
	39	44.9	3.2	616	22100	29.9	3.2	925	21500	22.4	2.7	1020	20100	14.9	1.8	1050	19600
	42	41.7	3.2	666	22400	27.8	3.0	931	21400	20.8	2.2	930	21400	13.9	1.5	935	21400
	46	38.1	3.2	728	22800	25.4	3.0	1020	20100	19.0	2.3	1020	20100	12.7	1.5	1020	20100
	48	36.5	3.2	768	23000	24.3	2.6	932	21400	18.2	2.0	933	21400	12.1	1.3	933	21400
	53	33.1	3.2	840	22700	22.0	2.6	1020	20100	16.5	2.0	1020	20100	11.0	1.3	1020	20100
	54	32.5	2.5	673	24500	21.6	2.3	933	21400	16.2	1.7	930	21400	10.8	1.1	933	21400
	60	29.2	2.5	735	23800	19.5	2.3	1020	20100	14.5	1.7	1020	20100	9.7	1.2	1020	20100
	67	26.2	2.4	790	23300	17.4	1.9	932	21400	13.0	1.4	932	21400	8.7	1.0	932	21400
	74	23.7	2.4	864	22400	15.8	1.9	1020	20100	11.8	1.4	1020	20100	7.9	1.0	1020	20100
	80	21.9	1.7	673	24400	14.6	1.6	932	21400	10.9	1.2	932	21400	7.3	0.8	932	21400
	88	19.9	1.7	736	23800	13.3	1.6	1020	20100	9.9	1.2	1020	20100	6.6	0.8	1020	20100
	93	18.9	1.6	742	23800	12.6	1.3	933	21400	9.4	1.0	932	21400	6.3	0.7	931	21400

Selection Tables for Reducers (60Hz Input)

■ **IMPORTANT**: Please refer to page 144 for Reducer Selection Table notes.

Refer to Page 166-187 for 50 Hz Input

Size	n1	1750				1165				870				580			
	Ratio i	n2 [rpm]	P1 [kW]	Tout [Nm]	Pro [N]	n2 [rpm]	P1 [kW]	Tout [Nm]	Pro [N]	n2 [rpm]	P1 [kW]	Tout [Nm]	Pro [N]	n2 [rpm]	P1 [kW]	Tout [Nm]	Pro [N]
4A105 [Dimension Drawings from page 198]	102	17.2	1.6	812	23000	11.5	1.4	1020	20100	8.6	1.0	1020	20100	5.7	0.7	1020	20100
	112	15.7	1.2	675	24400	10.4	1.1	932	21400	7.8	0.9	932	21400	5.2	0.6	932	21400
	123	14.3	1.2	738	23800	9.5	1.1	1020	20100	7.1	0.9	1020	20100	4.8	0.6	1020	20100
	138	12.7	1.1	748	23700	8.5	0.9	932	21400	6.3	0.7	932	21400	4.2	0.5	932	21400
	151	11.6	1.1	822	22900	7.8	0.9	1020	20100	5.8	0.7	1020	20100	3.9	0.5	1020	20100
	163	10.8	0.8	637	24800	7.2	0.7	862	22400	5.4	0.6	922	21600	3.6	0.4	922	21600
	179	9.8	0.8	697	24200	6.6	0.7	943	21300	4.9	0.6	1010	20200	3.3	0.4	1010	20200
	189	9.3	0.7	673	24400	6.2	0.6	860	22400	4.6	0.5	919	21600	3.1	0.3	920	21600
	207	8.5	0.8	736	23800	5.7	0.7	941	21300	4.2	0.5	1010	20300	2.8	0.4	1010	20300
	227	7.8	0.6	641	24700	5.2	0.5	769	23500	3.9	0.4	821	22900	2.6	0.2	821	22900
	249	7.1	0.6	702	24200	4.7	0.5	841	22600	3.5	0.4	897	21900	2.4	0.3	897	21900
	278	6.3	0.6	791	23200	4.2	0.4	894	21900	3.2	0.3	933	21400	2.1	0.2	930	21400
	305	5.8	0.6	866	22300	3.9	0.5	979	20700	2.9	0.4	1020	20100	1.9	0.3	1020	20100
4A110 [Dimension Drawings from page 198]	19	92.2	3.6	343	18800	61.4	3.6	515	20500	45.8	3.1	600	22200	30.6	2.1	600	25100
	21	83.4	3.6	375	19200	55.5	3.6	563	20900	41.5	3.1	657	22600	27.7	2.1	657	24600
	26	67.4	4.0	457	20000	44.9	4.0	687	21700	33.5	4.0	920	21600	22.4	3.0	1010	20200
	28	62.5	3.6	500	20400	41.7	3.6	751	22100	31.1	3.6	1010	20300	20.8	2.9	1220	15800
	35	50.0	3.6	629	21300	33.3	3.6	944	21200	24.9	3.2	1120	18200	16.6	2.1	1120	18200
	39	44.9	3.6	688	21700	29.9	3.6	1030	19800	22.4	3.2	1220	15800	14.9	2.1	1220	15800
	42	41.7	4.0	743	22000	27.8	4.0	1120	18300	20.8	3.0	1120	18200	13.9	2.0	1120	18200
	46	38.1	3.6	813	22300	25.4	3.6	1220	15900	19.0	2.7	1220	15800	12.7	1.8	1220	15800
	48	36.5	3.6	857	22400	24.3	3.1	1120	18200	18.2	2.3	1120	18200	12.1	1.5	1110	18200
	53	33.1	3.6	938	21300	22.0	3.1	1220	15800	16.5	2.3	1220	15800	11.0	1.6	1220	15800
	54	32.5	3.2	870	22300	21.6	2.7	1120	18200	16.2	2.0	1120	18200	10.8	1.4	1110	18200
	60	29.2	3.2	951	21100	19.5	2.8	1220	15800	14.5	2.1	1220	15800	9.7	1.4	1220	15800
	67	26.2	2.8	921	21600	17.4	2.2	1120	18200	13.0	1.7	1120	18200	8.7	1.1	1120	18200
	74	23.7	2.8	1010	20300	15.8	2.2	1220	15800	11.8	1.7	1220	15800	7.9	1.1	1220	15800
	80	21.9	2.0	770	23500	14.6	1.9	1120	18200	10.9	1.4	1120	18200	7.3	1.0	1120	18200
	88	19.9	2.0	842	22600	13.3	1.9	1220	15800	9.9	1.4	1220	15800	6.6	1.0	1220	15800
	93	18.9	1.9	887	22000	12.6	1.6	1120	18200	9.4	1.2	1120	18200	6.3	0.8	1120	18200
	102	17.2	1.9	972	20800	11.5	1.6	1220	15800	8.6	1.2	1220	15800	5.7	0.8	1220	15800
	112	15.7	1.5	847	22600	10.4	1.4	1120	18200	7.8	1.0	1120	18200	5.2	0.7	1120	18200
	123	14.3	1.5	926	21500	9.5	1.4	1220	15800	7.1	1.0	1220	15800	4.8	0.7	1220	15800
	138	12.7	1.3	900	21900	8.5	1.1	1120	18200	6.3	0.8	1120	18200	4.2	0.5	1120	18200
	151	11.6	1.3	984	20600	7.8	1.1	1220	15800	5.8	0.9	1220	15800	3.9	0.6	1220	15800
	163	10.8	0.9	775	23400	7.2	0.9	1120	18200	5.4	0.7	1120	18200	3.6	0.5	1120	18200
	179	9.8	1.0	847	22600	6.6	1.0	1220	15800	4.9	0.7	1220	15800	3.3	0.5	1220	15800
	189	9.3	0.9	816	22900	6.2	0.8	1120	18200	4.6	0.6	1120	18200	3.1	0.4	1120	18200
	207	8.5	0.9	893	22000	5.7	0.8	1220	15800	4.2	0.6	1220	15800	2.8	0.4	1220	15800
	227	7.8	0.7	765	23500	5.2	0.7	1120	18200	3.9	0.5	1120	18200	2.6	0.3	1120	18200
	249	7.1	0.7	836	22700	4.7	0.7	1220	15800	3.5	0.5	1220	15800	2.4	0.4	1220	15800
	278	6.3	0.7	926	21500	4.2	0.5	1120	18200	3.2	0.4	1120	18200	2.1	0.3	1120	18200
	305	5.8	0.7	1010	20200	3.9	0.6	1220	15800	2.9	0.4	1220	15800	1.9	0.3	1220	15800
4A115 [Dimension Drawings from page 198]	19	92.2	3.9	379	18600	61.4	3.9	569	20200	45.8	3.1	600	22200	30.6	2.1	600	25100
	21	83.4	4.0	414	19000	55.5	4.0	622	20600	41.5	3.1	657	22600	27.7	2.1	657	24600
	26	67.4	3.9	505	19800	44.9	3.9	758	21300	33.5	3.9	1010	20200	22.4	2.6	1010	20200
	28	62.5	4.0	552	20100	41.7	4.0	830	21600	31.1	4.0	1110	18400	20.8	3.1	1290	13900
	35	50.0	4.0	694	21000	33.3	4.0	1040	19600	24.9	3.7	1290	13900	16.6	2.5	1290	13900
	39	44.9	4.0	759	21300	29.9	4.0	1140	17700	22.4	3.4	1290	13900	14.9	2.3	1290	13900
	42	41.7	3.9	816	21600	27.8	3.9	1230	15700	20.8	3.1	1290	13900	13.9	2.0	1290	13900
	46	38.1	3.9	893	21900	25.4	3.8	1290	13900	19.0	2.8	1290	13900	12.7	1.9	1290	13900
	48	36.5	3.9	942	21300	24.3	3.6	1290	13900	18.2	2.7	1290	13900	12.1	1.8	1290	13900
	53	33.1	3.9	1030	19900	22.0	3.3	1290	13900	16.5	2.5	1290	13900	11.0	1.7	1290	13900
	54	32.5	3.9	1070	19200	21.6	3.2	1290	13900	16.2	2.3	1290	13900	10.8	1.6	1290	13900
	60	29.2	3.6	1070	19200	19.5	2.9	1290	13900	14.5	2.2	1290	13900	9.7	1.5	1290	13900
	67	26.2	3.2	1050	19500	17.4	2.6	1290	13900	13.0	1.9	1290	13900	8.7	1.3	1290	13900
	74	23.7	2.9	1070	19200	15.8	2.4	1290	13900	11.8	1.8	1290	13900	7.9	1.2	1290	13900
	80	21.9	2.3	894	22000	14.6	2.2	1290	13900	10.9	1.6	1290	13900	7.3	1.1	1290	13900
	88	19.9	2.3	978	20700	13.3	2.0	1290	13900	9.9	1.5	1290	13900	6.6	1.0	1290	13900
	93	18.9	2.2	1040	19700	12.6	1.8	1290	13900	9.4	1.4	1290	13900	6.3	0.9	1290	13900
	102	17.2	2.1	1070	19200	11.5	1.7	1290	13900	8.6	1.3	1290	13900	5.7	0.9	1290	13900
	112	15.7	1.9	1020	20100	10.4	1.6	1290	13900	7.8	1.2	1290	13900	5.2	0.8	1290	13900

Selection Tables for Reducers (60Hz Input)

■ **IMPORTANT**: Please refer to page 144 for Reducer Selection Table notes.

Refer to Page 166-187 for 50 Hz Input

Size	n1	1750				1165				870				580			
	Ratio i	n2 [rpm]	P1 [kW]	Tout [Nm]	Pro [N]	n2 [rpm]	P1 [kW]	Tout [Nm]	Pro [N]	n2 [rpm]	P1 [kW]	Tout [Nm]	Pro [N]	n2 [rpm]	P1 [kW]	Tout [Nm]	Pro [N]
4A115 [Dimension Drawings from page 198]	123	14.3	1.8	1070	19200	9.5	1.4	1290	13900	7.1	1.1	1290	13900	4.8	0.7	1290	13900
	138	12.7	1.5	1050	19500	8.5	1.2	1290	13900	6.3	0.9	1290	13900	4.2	0.6	1290	13900
	151	11.6	1.5	1070	19200	7.8	1.2	1290	13900	5.8	0.9	1290	13900	3.9	0.6	1290	13900
	163	10.8	1.1	911	21700	7.2	1.0	1290	13900	5.4	0.8	1290	13900	3.6	0.5	1290	13900
	179	9.8	1.2	998	20400	6.6	1.0	1290	13900	4.9	0.8	1290	13900	3.3	0.5	1290	13900
	189	9.3	1.0	959	21000	6.2	0.9	1290	13900	4.6	0.7	1290	13900	3.1	0.4	1290	13900
	207	8.5	1.1	1050	19500	5.7	0.9	1290	13900	4.2	0.7	1290	13900	2.8	0.5	1290	13900
	227	7.8	0.8	867	22300	5.2	0.8	1290	13900	3.9	0.6	1290	13900	2.6	0.3	1290	13900
	249	7.1	0.8	947	21200	4.7	0.7	1290	13900	3.5	0.6	1290	13900	2.4	0.4	1290	13900
	278	6.3	0.8	1060	19300	4.2	0.6	1290	13900	3.2	0.5	1290	13900	2.1	0.3	1290	13900
	305	5.8	0.7	1070	19200	3.9	0.6	1290	13900	2.9	0.5	1290	13900	1.9	0.3	1290	13900
4A120 [Dimension Drawings from page 198]	11	159.1	9.6	507	14500	106.0	9.6	762	15300	79.1	8.8	934	16200	52.8	5.9	934	18900
	13	134.7	9.6	618	14900	89.7	9.6	929	15600	67.0	8.3	1060	16700	44.7	5.9	1140	17800
	14	125.0	9.6	676	15100	83.3	9.6	1020	15700	62.2	8.3	1160	16900	41.5	5.9	1250	15200
	16	109.4	9.6	773	15300	72.9	9.6	1150	15800	54.4	7.8	1260	14800	36.3	5.4	1290	13900
	18	97.3	9.6	845	15500	64.8	9.6	1260	14700	48.4	7.3	1290	13900	32.3	4.9	1290	13900
	19	92.2	6.5	632	17200	61.4	6.5	949	18200	45.8	5.8	1130	17900	30.6	3.9	1140	17800
	21	83.4	6.6	691	17500	55.5	6.6	1040	18300	41.5	5.9	1240	15300	27.7	3.9	1240	15200
	22	79.6	6.6	737	17600	53.0	6.6	1110	18400	39.6	5.5	1230	15600	26.4	3.8	1290	13900
	25	70.0	6.6	806	17800	46.6	6.6	1210	16100	34.8	5.2	1290	13900	23.2	3.5	1290	13900
	26	67.4	7.0	842	17900	44.9	7.0	1270	14600	33.5	5.0	1290	13900	22.4	3.0	1290	13900
	28	62.5	6.6	921	18100	41.7	6.1	1290	13900	31.1	4.6	1290	13900	20.8	3.1	1290	13900
	35	50.0	5.1	898	19900	33.3	4.9	1290	13900	24.9	3.7	1290	13900	16.6	2.5	1290	13900
	39	44.9	5.1	982	20100	29.9	4.5	1290	13900	22.4	3.4	1290	13900	14.9	2.3	1290	13900
	42	41.7	5.1	1060	19300	27.8	4.1	1290	13900	20.8	3.1	1290	13900	13.9	2.0	1290	13900
	46	38.1	4.7	1070	19200	25.4	3.8	1290	13900	19.0	2.8	1290	13900	12.7	1.9	1290	13900
	48	36.5	4.4	1070	19200	24.3	3.6	1290	13900	18.2	2.7	1290	13900	12.1	1.8	1290	13900
	53	33.1	4.1	1070	19200	22.0	3.3	1290	13900	16.5	2.5	1290	13900	11.0	1.7	1290	13900
	54	32.5	3.9	1070	19200	21.6	3.1	1290	13900	16.2	2.3	1290	13900	10.8	1.6	1290	13900
	60	29.2	3.6	1070	19200	19.5	2.9	1290	13900	14.5	2.2	1290	13900	9.7	1.5	1290	13900
	67	26.2	3.2	1070	19200	17.4	2.6	1290	13900	13.0	1.9	1290	13900	8.7	1.3	1290	13900
	74	23.7	2.9	1070	19200	15.8	2.4	1290	13900	11.8	1.8	1290	13900	7.9	1.2	1290	13900
	80	21.9	2.7	1070	19200	14.6	2.2	1290	13900	10.9	1.6	1290	13900	7.3	1.1	1290	13900
	88	19.9	2.5	1070	19200	13.3	2.0	1290	13900	9.9	1.5	1290	13900	6.6	1.0	1290	13900
	93	18.9	2.3	1070	19200	12.6	1.8	1290	13900	9.4	1.4	1290	13900	6.3	0.9	1290	13900
	102	17.2	2.1	1070	19200	11.5	1.7	1290	13900	8.6	1.3	1290	13900	5.7	0.9	1290	13900
	112	15.7	1.9	1070	19200	10.4	1.6	1290	13900	7.8	1.2	1290	13900	5.2	0.8	1290	13900
	123	14.3	1.8	1070	19200	9.5	1.4	1290	13900	7.1	1.1	1290	13900	4.8	0.7	1290	13900
	138	12.7	1.5	1070	19200	8.5	1.2	1290	13900	6.3	0.9	1290	13900	4.2	0.6	1290	13900
	151	11.6	1.5	1070	19200	7.8	1.2	1290	13900	5.8	0.9	1290	13900	3.9	0.6	1290	13900
	163	10.8	1.3	1070	19200	7.2	1.0	1290	13900	5.4	0.8	1290	13900	3.6	0.5	1290	13900
	179	9.8	1.2	1070	19200	6.6	1.0	1290	13900	4.9	0.8	1290	13900	3.3	0.5	1290	13900
	189	9.3	1.1	1070	19200	6.2	0.9	1290	13900	4.6	0.7	1290	13900	3.1	0.5	1290	13900
	207	8.5	1.1	1070	19200	5.7	0.9	1290	13900	4.2	0.7	1290	13900	2.8	0.5	1290	13900
	227	7.8	0.9	1070	19200	5.2	0.8	1290	13900	3.9	0.6	1290	13900	2.6	0.4	1290	13900
	249	7.1	0.9	1070	19200	4.7	0.7	1290	13900	3.5	0.6	1290	13900	2.4	0.4	1290	13900
	278	6.3	0.8	1070	19200	4.2	0.6	1290	13900	3.2	0.5	1290	13900	2.1	0.3	1290	13900
	305	5.8	0.7	1070	19200	3.9	0.6	1290	13900	2.9	0.5	1290	13900	1.9	0.3	1290	13900
4A125 [Dimension Drawings from page 198]	11	159.1	11.0	581	14100	106.0	11.0	873	14700	79.1	8.8	934	16200	52.8	5.9	934	18900
	13	134.7	11.0	708	14400	89.7	10.1	975	15300	67.0	8.3	1060	16700	44.7	5.9	1140	17800
	14	125.0	11.0	775	14600	83.3	10.1	1070	15400	62.2	8.3	1160	16900	41.5	5.9	1250	15200
	16	109.4	11.0	886	14700	72.9	9.6	1150	15800	54.4	7.8	1260	14800	36.3	5.4	1290	13900
	18	97.3	11.0	969	14800	64.8	9.6	1260	14700	48.4	7.3	1290	13900	32.3	4.9	1290	13900
	19	92.2	7.5	725	16700	61.4	7.3	1060	17600	45.8	5.8	1130	17900	30.6	3.9	1140	17800
	21	83.4	7.6	793	16900	55.5	7.3	1160	17300	41.5	5.9	1240	15300	27.7	3.9	1240	15200
	22	79.6	7.6	846	17000	53.0	6.8	1150	17500	39.6	5.5	1230	15600	26.4	3.8	1290	13900
	25	70.0	7.6	925	17200	46.6	6.8	1260	14900	34.8	5.2	1290	13900	23.2	3.5	1290	13900
	26	67.4	8.0	967	17300	44.9	7.0	1290	13900	33.5	5.0	1290	13900	22.4	3.0	1290	13900
	28	62.5	7.6	1060	17400	41.7	6.1	1290	13900	31.1	4.6	1290	13900	20.8	3.1	1290	13900
	35	50.0	6.0	1050	19000	33.3	4.9	1290	13900	24.9	3.7	1290	13900	16.6	2.5	1290	13900
	39	44.9	5.6	1070	19200	29.9	4.5	1290	13900	22.4	3.4	1290	13900	14.9	2.3	1290	13900
	42	41.7	5.1	1070	19200	27.8	4.1	1290	13900	20.8	3.1	1290	13900	13.9	2.0	1290	13900

Selection Tables for Reducers (60Hz Input)

■ **IMPORTANT**: Please refer to page 144 for Reducer Selection Table notes.

Refer to Page 166-187 for 50 Hz Input

Size	n1	1750				1165				870				580			
	Ratio i	n2 [rpm]	P1 [kW]	Tout [Nm]	Pro [N]	n2 [rpm]	P1 [kW]	Tout [Nm]	Pro [N]	n2 [rpm]	P1 [kW]	Tout [Nm]	Pro [N]	n2 [rpm]	P1 [kW]	Tout [Nm]	Pro [N]
4A125 [Dimension Drawings from page 198]	46	38.1	4.7	1070	19200	25.4	3.8	1290	13900	19.0	2.8	1290	13900	12.7	1.9	1290	13900
	48	36.5	4.0	1070	19200	24.3	4.0	1290	13900	18.2	3.0	1290	13900	12.1	2.0	1290	13900
	53	33.1	4.1	1070	19200	22.0	3.3	1290	13900	16.5	2.5	1290	13900	11.0	1.7	1290	13900
	54	32.5	3.9	1070	19200	21.6	3.4	1290	13900	16.2	2.3	1290	13900	10.8	1.6	1290	13900
	60	29.2	3.6	1070	19200	19.5	2.9	1290	13900	14.5	2.2	1290	13900	9.7	1.5	1290	13900
	67	26.2	3.2	1070	19200	17.4	2.6	1290	13900	13.0	1.9	1290	13900	8.7	1.3	1290	13900
	74	23.7	2.9	1070	19200	15.8	2.4	1290	13900	11.8	1.8	1290	13900	7.9	1.2	1290	13900
	80	21.9	2.7	1070	19200	14.6	2.2	1290	13900	10.9	1.6	1290	13900	7.3	1.1	1290	13900
	88	19.9	2.5	1070	19200	13.3	2.0	1290	13900	9.9	1.5	1290	13900	6.6	1.0	1290	13900
	93	18.9	2.3	1070	19200	12.6	1.8	1290	13900	9.4	1.4	1290	13900	6.3	0.9	1290	13900
	102	17.2	2.1	1070	19200	11.5	1.7	1290	13900	8.6	1.3	1290	13900	5.7	0.9	1290	13900
	112	15.7	1.9	1070	19200	10.4	1.6	1290	13900	7.8	1.2	1290	13900	5.2	0.8	1290	13900
	123	14.3	1.8	1070	19200	9.5	1.4	1290	13900	7.1	1.1	1290	13900	4.8	0.7	1290	13900
	138	12.7	1.5	1070	19200	8.5	1.2	1290	13900	6.3	0.9	1290	13900	4.2	0.6	1290	13900
	151	11.6	1.5	1070	19200	7.8	1.2	1290	13900	5.8	0.9	1290	13900	3.9	0.6	1290	13900
	163	10.8	1.3	1070	19200	7.2	1.1	1290	13900	5.4	0.8	1290	13900	3.6	0.5	1290	13900
	179	9.8	1.2	1070	19200	6.6	1.0	1290	13900	4.9	0.8	1290	13900	3.3	0.5	1290	13900
	189	9.3	1.1	1070	19200	6.2	0.9	1290	13900	4.6	0.7	1290	13900	3.1	0.5	1290	13900
	207	8.5	1.1	1070	19200	5.7	0.9	1290	13900	4.2	0.7	1290	13900	2.8	0.5	1290	13900
	227	7.8	0.9	1070	19200	5.2	0.8	1290	13900	3.9	0.6	1290	13900	2.6	0.4	1290	13900
	249	7.1	0.9	1070	19200	4.7	0.7	1290	13900	3.5	0.6	1290	13900	2.4	0.4	1290	13900
	278	6.3	0.8	1070	19200	4.2	0.6	1290	13900	3.2	0.5	1290	13900	2.1	0.3	1290	13900
	305	5.8	0.7	1070	19200	3.9	0.6	1290	13900	2.9	0.5	1290	13900	1.9	0.3	1290	13900
4A140 [Dimension Drawings from page 198]	11	159.1	19.0	1000	11800	106.0	15.7	1250	12700	79.1	12.1	1290	13900	52.8	8.1	1290	13900
	13	134.7	16.6	1070	12500	89.7	13.3	1290	13600	67.0	10.0	1290	13900	44.7	6.7	1290	13900
	14	125.0	15.2	1070	13000	83.3	12.2	1290	13900	62.2	9.1	1290	13900	41.5	6.1	1290	13900
	16	109.4	13.3	1070	13700	72.9	10.7	1290	13900	54.4	8.0	1290	13900	36.3	5.4	1290	13900
	18	97.3	12.1	1070	14300	64.8	9.8	1290	13900	48.4	7.3	1290	13900	32.3	4.9	1290	13900
	19	92.2	11.1	1070	14900	61.4	8.9	1290	13900	45.8	6.7	1290	13900	30.6	4.4	1290	13900
	21	83.4	10.1	1070	15400	55.5	8.2	1290	13900	41.5	6.1	1290	13900	27.7	4.1	1290	13900
	22	79.6	9.5	1070	15800	53.0	7.7	1290	13900	39.6	5.7	1290	13900	26.4	3.8	1290	13900
	25	70.0	8.7	1070	16400	46.6	7.0	1290	13900	34.8	5.2	1290	13900	23.2	3.5	1290	13900
	26	67.4	8.3	1070	16700	44.9	6.7	1290	13900	33.5	5.0	1290	13900	22.4	3.3	1290	13900
	28	62.5	7.6	1070	17300	41.7	6.1	1290	13900	31.1	4.6	1290	13900	20.8	3.1	1290	13900
	35	50.0	6.1	1070	18900	33.3	4.9	1290	13900	24.9	3.7	1290	13900	16.6	2.5	1290	13900
	39	44.9	5.6	1070	19200	29.9	4.5	1290	13900	22.4	3.4	1290	13900	14.9	2.3	1290	13900
	42	41.7	5.1	1070	19200	27.8	4.1	1290	13900	20.8	3.1	1290	13900	13.9	2.0	1290	13900
	46	38.1	4.7	1070	19200	25.4	3.8	1290	13900	19.0	2.8	1290	13900	12.7	1.9	1290	13900
	48	36.5	4.4	1070	19200	24.3	3.6	1290	13900	18.2	2.7	1290	13900	12.1	1.8	1290	13900
	53	33.1	4.1	1070	19200	22.0	3.3	1290	13900	16.5	2.5	1290	13900	11.0	1.7	1290	13900
	54	32.5	3.9	1070	19200	21.6	3.1	1290	13900	16.2	2.3	1290	13900	10.8	1.6	1290	13900
	60	29.2	3.6	1070	19200	19.5	2.9	1290	13900	14.5	2.2	1290	13900	9.7	1.5	1290	13900
	67	26.2	3.2	1070	19200	17.4	2.6	1290	13900	13.0	1.9	1290	13900	8.7	1.3	1290	13900
	74	23.7	2.9	1070	19200	15.8	2.4	1290	13900	11.8	1.8	1290	13900	7.9	1.2	1290	13900
	80	21.9	2.7	1070	19200	14.6	2.2	1290	13900	10.9	1.6	1290	13900	7.3	1.1	1290	13900
	88	19.9	2.5	1070	19200	13.3	2.0	1290	13900	9.9	1.5	1290	13900	6.6	1.0	1290	13900
	93	18.9	2.3	1070	19200	12.6	1.8	1290	13900	9.4	1.4	1290	13900	6.3	0.9	1290	13900
	102	17.2	2.1	1070	19200	11.5	1.7	1290	13900	8.6	1.3	1290	13900	5.7	0.9	1290	13900
	112	15.7	1.9	1070	19200	10.4	1.6	1290	13900	7.8	1.2	1290	13900	5.2	0.8	1290	13900
	123	14.3	1.8	1070	19200	9.5	1.4	1290	13900	7.1	1.1	1290	13900	4.8	0.7	1290	13900
	138	12.7	1.5	1070	19200	8.5	1.24	1290	13900	6.3	0.9	1290	13900	4.2	0.6	1290	13900
	151	11.6	1.5	1070	19200	7.8	1.2	1290	13900	5.8	0.9	1290	13900	3.9	0.6	1290	13900
	163	10.8	1.3	1070	19200	7.2	1.1	1290	13900	5.4	0.8	1290	13900	3.6	0.5	1290	13900
	179	9.8	1.2	1070	19200	6.6	1.0	1290	13900	4.9	0.8	1290	13900	3.3	0.5	1290	13900
	189	9.3	1.1	1070	19200	6.2	0.9	1290	13900	4.6	0.8	1290	13900	3.1	0.5	1290	13900
	207	8.5	1.1	1070	19200	5.7	0.9	1290	13900	4.2	0.7	1290	13900	2.8	0.5	1290	13900
	227	7.8	0.9	1070	19200	5.2	0.8	1290	13900	3.9	0.6	1290	13900	2.6	0.4	1290	13900
	249	7.1	0.9	1070	19200	4.7	0.7	1290	13900	3.5	0.6	1290	13900	2.4	0.4	1290	13900
	278	6.3	0.8	1070	19200	4.2	0.6	1290	13900	3.2	0.5	1290	13900	2.1	0.3	1290	13900
	305	5.8	0.7	1070	19200	3.9	0.6	1290	13900	2.9	0.5	1290	13900	1.9	0.3	1290	13900
4A145	11	159.1	20.2	1070	11400	106.0	15.7	1250	12700	79.1	12.1	1290	13900	52.8	8.1	1290	13900
	13	134.7	16.6	1070	12500	89.7	13.3	1290	13600	67.0	10.0	1290	13900	44.7	6.7	1290	13900

Selection Tables for Reducers (60Hz Input)

■**IMPORTANT**: Please refer to page 144 for Reducer Selection Table notes.

Refer to Page 166-187 for 50 Hz Input

Size	n1	1750				1165				870				580			
	Ratio i	n2 [rpm]	P1 [kW]	Tout [Nm]	Pro [N]	n2 [rpm]	P1 [kW]	Tout [Nm]	Pro [N]	n2 [rpm]	P1 [kW]	Tout [Nm]	Pro [N]	n2 [rpm]	P1 [kW]	Tout [Nm]	Pro [N]
4A145 [Dimension Drawings from page 198]	14	125.0	15.2	1070	13000	83.3	12.2	1290	13900	62.2	9.1	1290	13900	41.5	6.1	1290	13900
	16	109.4	13.3	1070	13700	72.9	10.7	1290	13900	54.4	8.0	1290	13900	36.3	5.4	1290	13900
	18	97.3	12.1	1070	14300	64.8	9.8	1290	13900	48.4	7.3	1290	13900	32.3	4.9	1290	13900
	19	92.2	11.1	1070	14900	61.4	8.9	1290	13900	45.8	6.6	1290	13900	30.6	4.4	1290	13900
	21	83.4	10.1	1070	15400	55.5	8.2	1290	13900	41.5	6.1	1290	13900	27.7	4.1	1290	13900
	22	79.6	9.5	1070	15800	53.0	7.7	1290	13900	39.6	5.7	1290	13900	26.4	3.8	1290	13900
	25	70.0	8.7	1070	16400	46.6	7.0	1290	13900	34.8	5.2	1290	13900	23.2	3.5	1290	13900
	26	67.4	8.3	1070	16700	44.9	6.7	1290	13900	33.5	5.0	1290	13900	22.4	3.3	1290	13900
	28	62.5	7.6	1070	17300	41.7	6.1	1290	13900	31.1	4.6	1290	13900	20.8	3.1	1290	13900
	35	50.0	6.1	1070	18900	33.3	4.9	1290	13900	24.9	3.7	1290	13900	16.6	2.5	1290	13900
	39	44.9	5.6	1070	19200	29.9	4.5	1290	13900	22.4	3.4	1290	13900	14.9	2.3	1290	13900
	42	41.7	5.1	1070	19200	27.8	4.1	1290	13900	20.8	3.1	1290	13900	13.9	2.0	1290	13900
	46	38.1	4.7	1070	19200	25.4	3.8	1290	13900	19.0	2.8	1290	13900	12.7	1.9	1290	13900
	48	36.5	4.4	1070	19200	24.3	3.6	1290	13900	18.2	2.7	1290	13900	12.1	1.8	1290	13900
	53	33.1	4.1	1070	19200	22.0	3.3	1290	13900	16.5	2.5	1290	13900	11.0	1.7	1290	13900
	54	32.5	3.9	1070	19200	21.6	3.1	1290	13900	16.2	2.3	1290	13900	10.8	1.6	1290	13900
	60	29.2	3.6	1070	19200	19.5	2.9	1290	13900	14.5	2.2	1290	13900	9.7	1.5	1290	13900
	67	26.2	3.2	1070	19200	17.4	2.6	1290	13900	13.0	1.9	1290	13900	8.7	1.3	1290	13900
	74	23.7	2.9	1070	19200	15.8	2.3	1290	13900	11.8	1.7	1290	13900	7.9	1.2	1290	13900
	80	21.9	2.7	1070	19200	14.6	2.2	1290	13900	10.9	1.6	1290	13900	7.3	1.1	1290	13900
	88	19.9	2.5	1070	19200	13.3	2.0	1290	13900	9.9	1.5	1290	13900	6.6	1.0	1290	13900
	93	18.9	2.3	1070	19200	12.6	1.8	1290	13900	9.4	1.4	1290	13900	6.3	0.9	1290	13900
	102	17.2	2.1	1070	19200	11.5	1.7	1290	13900	8.6	1.3	1290	13900	5.7	0.9	1290	13900
	112	15.7	1.9	1070	19200	10.4	1.6	1290	13900	7.8	1.2	1290	13900	5.2	0.8	1290	13900
	123	14.3	1.8	1070	19200	9.5	1.4	1290	13900	7.1	1.1	1290	13900	4.8	0.7	1290	13900
	138	12.7	1.5	1070	19200	8.5	1.2	1290	13900	6.3	0.9	1290	13900	4.2	0.6	1290	13900
	151	11.6	1.5	1070	19200	7.8	1.2	1290	13900	5.8	0.9	1290	13900	3.9	0.6	1290	13900
	163	10.8	1.3	1070	19200	7.2	1.0	1290	13900	5.4	0.8	1290	13900	3.6	0.5	1290	13900
	179	9.8	1.2	1070	19200	6.6	1.0	1290	13900	4.9	0.8	1290	13900	3.3	0.5	1290	13900
	189	9.3	1.1	1070	19200	6.2	0.9	1290	13900	4.6	0.7	1290	13900	3.1	0.5	1290	13900
	207	8.5	1.1	1070	19200	5.7	0.9	1290	13900	4.2	0.7	1290	13900	2.8	0.5	1290	13900
	227	7.8	0.9	1070	19200	5.2	0.8	1290	13900	3.9	0.6	1290	13900	2.6	0.4	1290	13900
	249	7.1	0.9	1070	19200	4.7	0.7	1290	13900	3.5	0.6	1290	13900	2.4	0.4	1290	13900
	278	6.3	0.8	1070	19200	4.2	0.6	1290	13900	3.2	0.5	1290	13900	2.1	0.3	1290	13900
	305	5.8	0.7	1070	19200	3.9	0.6	1290	13900	2.9	0.5	1290	13900	1.9	0.3	1290	13900
4B120 [Dimension Drawings from page 198]	11	159.1	9.6	507	21100	106.0	9.6	762	23000	79.1	8.8	934	24700	52.8	5.9	934	28400
	13	134.7	9.6	618	22000	89.7	9.6	929	23900	67.0	8.3	1060	25800	44.7	5.9	1140	29400
	14	125.0	9.6	676	22400	83.3	9.6	1020	24300	62.2	8.3	1160	26300	41.5	5.9	1250	30000
	16	109.4	9.6	773	23000	72.9	9.6	1150	24800	54.4	7.8	1260	27100	36.3	5.9	1420	30600
	18	97.3	9.6	845	23500	64.8	9.6	1260	25200	48.4	7.8	1380	27500	32.3	5.9	1560	31100
	19	92.2	6.5	632	25100	61.4	6.5	949	27400	45.8	5.8	1130	29500	30.6	3.9	1140	33900
	21	83.4	6.6	691	25700	55.5	6.6	1040	27900	41.5	5.9	1240	30000	27.7	3.9	1240	34500
	22	79.6	6.6	737	26000	53.0	6.6	1110	28200	39.6	5.5	1230	30700	26.4	4.0	1360	34800
	25	70.0	6.6	806	26500	46.6	6.6	1210	28700	34.8	5.5	1350	31200	23.2	4.0	1480	35400
	26	67.4	6.5	842	26800	44.9	6.5	1270	28900	33.5	5.5	1410	31400	22.4	4.0	1550	35600
	28	62.5	6.6	921	27300	41.7	6.6	1380	29300	31.1	5.5	1550	31900	20.8	4.0	1700	36200
	35	50.0	5.1	898	29500	33.3	5.1	1350	31900	24.9	4.6	1630	34200	16.6	3.1	1630	38100
	39	44.9	5.1	982	30100	29.9	5.1	1480	32500	22.4	4.6	1780	34700	14.9	3.1	1780	36700
	42	41.7	5.1	1060	30600	27.8	5.1	1590	32900	20.8	3.9	1630	36300	13.9	2.6	1630	38100
	46	38.1	5.1	1160	31100	25.4	5.1	1740	33300	19.0	3.9	1780	36700	12.7	2.6	1780	36700
	48	36.5	5.1	1220	31400	24.3	4.5	1630	34500	18.2	3.4	1630	38100	12.1	2.2	1630	38100
	53	33.1	5.1	1340	31900	22.0	4.5	1780	34900	16.5	3.4	1780	36700	11.0	2.3	1780	36700
	54	32.5	5.1	1390	32100	21.6	3.9	1620	36100	16.2	2.9	1610	38300	10.8	2.0	1620	38300
	60	29.2	5.1	1520	32600	19.5	4.0	1770	36600	14.5	3.0	1770	36900	9.7	2.0	1770	36900
	67	26.2	4.0	1340	34800	17.4	3.2	1620	38200	13.0	2.4	1620	38200	8.7	1.6	1620	38200
	74	23.7	4.0	1460	35400	15.8	3.2	1770	36800	11.8	2.4	1770	36800	7.9	1.6	1770	36800
	80	21.9	3.1	1240	37400	14.6	2.7	1630	38100	10.9	2.1	1630	38100	7.3	1.4	1630	38100
	88	19.9	3.1	1360	38100	13.3	2.7	1780	36700	9.9	2.1	1780	36700	6.6	1.4	1780	36700
	93	18.9	3.0	1400	38700	12.6	2.3	1610	38300	9.4	1.7	1620	38300	6.3	1.2	1620	38300
	102	17.2	3.0	1530	39000	11.5	2.3	1770	36900	8.6	1.8	1770	36900	5.7	1.2	1770	36900
	112	15.7	2.5	1410	39900	10.4	2.0	1630	38100	7.8	1.5	1630	38100	5.2	1.0	1630	38100
	123	14.3	2.5	1540	38900	9.5	2.0	1780	36700	7.1	1.5	1780	36700	4.8	1.0	1780	36700

Selection Tables for Reducers (60Hz Input)

■ **IMPORTANT**: Please refer to page 144 for Reducer Selection Table notes.

Refer to Page 166-187 for 50 Hz Input

Size	n1	1750				1165				870				580			
	Ratio i	n2 [rpm]	P1 [kW]	Tout [Nm]	Pro [N]	n2 [rpm]	P1 [kW]	Tout [Nm]	Pro [N]	n2 [rpm]	P1 [kW]	Tout [Nm]	Pro [N]	n2 [rpm]	P1 [kW]	Tout [Nm]	Pro [N]
4B120 [Dimension Drawings from page 198]	138	12.7	1.9	1320	40500	8.5	1.6	1630	38100	6.3	1.2	1630	38100	4.2	0.8	1630	38100
	151	11.6	2.0	1450	39600	7.8	1.6	1780	36700	5.8	1.2	1780	36700	3.9	0.8	1780	36700
	163	10.8	1.72	1410	39900	7.2	1.3	1630	38100	5.4	1.0	1630	38100	3.6	0.7	1630	38100
	179	9.8	1.8	1540	38900	6.6	1.4	1780	36700	4.9	1.0	1780	36700	3.3	0.7	1780	36700
	189	9.3	1.3	1230	41000	6.2	1.1	1630	38100	4.6	0.9	1630	38100	3.1	0.6	1630	38100
	207	8.5	1.3	1360	40300	5.7	1.2	1780	36700	4.2	0.9	1780	36700	2.8	0.6	1780	36700
	227	7.8	2.0	1090	41900	5.2	1.0	1630	38100	3.9	0.7	1630	38100	2.6	0.5	1630	38100
	249	7.1	1.0	1200	41300	4.7	1.0	1780	36700	3.5	0.8	1780	36700	2.4	0.5	1780	36700
	278	6.3	0.9	1320	40500	4.2	0.8	1630	38100	3.2	0.6	1630	38100	2.1	0.4	1630	38100
	305	5.8	1.0	1450	39600	3.9	0.8	1780	36700	2.9	0.6	1780	36700	1.9	0.4	1780	36700
4B125 [Dimension Drawings from page 198]	11	159.1	11.0	581	20800	106.0	11.0	873	22500	79.1	8.8	934	24700	52.8	5.9	934	28400
	13	134.7	11.0	708	21600	89.7	10.1	975	23700	67.0	8.3	1060	25800	44.7	5.9	1140	29400
	14	125.0	11.0	775	22000	83.3	10.1	1070	24100	62.2	8.3	1160	26300	41.5	5.9	1250	30000
	16	109.4	11.0	886	22600	72.9	9.6	1150	24800	54.4	7.8	1260	27100	36.3	5.9	1420	30600
	18	97.3	11.0	969	23000	64.8	9.6	1260	25200	48.4	7.8	1380	27500	32.3	5.9	1560	31100
	19	92.2	7.5	725	24700	61.4	7.3	1060	26900	45.8	5.8	1130	29500	30.6	3.9	1140	33900
	21	83.4	7.6	793	25200	55.5	7.3	1160	27400	41.5	5.9	1240	30000	27.7	3.9	1240	34500
	22	79.6	7.6	846	25500	53.0	6.8	1150	28000	39.6	5.5	1230	30700	26.4	4.0	1360	34800
	25	70.0	7.6	925	26000	46.6	6.8	1260	28500	34.8	5.5	1350	31200	23.2	4.0	1480	35400
	26	67.4	7.5	967	26200	44.9	6.8	1320	28700	33.5	5.5	1410	31400	22.4	4.0	1550	35600
	28	62.5	7.6	1060	26700	41.7	6.9	1440	29100	31.1	5.5	1550	31900	20.8	4.0	1700	36200
	35	50.0	6.0	1050	28900	33.3	6.0	1570	31000	24.9	4.8	1680	34000	16.6	3.5	1850	36000
	39	44.9	6.0	1150	29400	29.9	6.0	1720	31400	22.4	4.8	1840	34500	14.9	3.5	2030	34000
	42	41.7	5.9	1240	29800	27.8	5.3	1680	32500	20.8	4.3	1800	35600	13.9	3.1	1960	34900
	46	38.1	6.0	1360	30300	25.4	5.4	1840	32900	19.0	4.3	1970	34700	12.7	3.1	2140	32600
	48	36.5	5.9	1430	30600	24.3	5.4	1960	33100	18.2	4.0	1960	34900	12.1	2.7	1960	34900
	53	33.1	6.0	1560	31000	22.0	5.4	2140	32600	16.5	4.1	2140	32600	11.0	2.7	2140	32600
	54	32.5	5.7	1550	31500	21.6	4.8	1960	34700	16.2	3.6	1950	34900	10.8	2.4	1960	34900
	60	29.2	5.7	1690	31900	19.5	4.8	2140	32600	14.5	3.6	2140	32600	9.7	2.4	2140	32600
	67	26.2	4.9	1650	33500	17.4	3.9	1960	34900	13.0	2.9	1960	34900	8.7	2.0	1960	34900
	74	23.7	4.9	1810	34000	15.8	3.9	2140	32600	11.8	2.9	2140	32600	7.9	2.0	2140	32600
	80	21.9	4.0	1590	35900	14.6	3.3	1960	34900	10.9	2.5	1960	34900	7.3	1.7	1960	34900
	88	19.9	4.0	1740	36500	13.3	3.3	2140	32600	9.9	2.5	2140	32600	6.6	1.7	2140	32600
	93	18.9	3.8	1760	36900	12.6	2.8	1960	34900	9.4	2.1	1950	34900	6.3	1.4	1960	34900
	102	17.2	3.8	1920	35200	11.5	2.8	2140	32600	8.6	2.1	2140	32600	5.7	1.4	2140	32600
	112	15.7	3.2	1790	36600	10.4	2.4	1960	34900	7.8	1.8	1960	34900	5.2	1.2	1960	34900
	123	14.3	3.2	1960	34800	9.5	2.4	2140	32600	7.1	1.8	2140	32600	4.8	1.2	2140	32600
	138	12.7	2.4	1650	38000	8.5	1.9	1960	34900	6.3	1.4	1950	34900	4.2	0.9	1960	34900
	151	11.6	2.4	1800	36500	7.8	1.9	2140	32600	5.8	1.4	2140	32600	3.9	1.0	2140	32600
	163	10.8	2.3	1870	35800	7.2	1.6	1960	34900	5.4	1.2	1950	34900	3.6	0.8	1960	34900
	179	9.8	2.3	2050	33800	6.6	1.6	2140	32600	4.9	1.2	2140	32600	3.3	0.8	2140	32600
	189	9.3	1.6	1540	38900	6.2	1.4	1950	34900	4.6	1.0	1950	34900	3.1	0.7	1960	34900
	207	8.5	1.7	1680	37700	5.7	1.4	2140	32600	4.2	1.1	2140	32600	2.8	0.7	2140	32600
	227	7.8	1.2	1370	40200	5.2	1.0	1650	37900	3.9	0.8	1770	36800	2.6	0.5	1840	36200
	249	7.1	1.2	1500	39200	4.7	1.0	1810	36500	3.5	0.8	1940	35100	2.4	0.6	2010	34200
	278	6.3	1.1	1580	38500	4.2	0.9	1830	36300	3.2	0.7	1960	34900	2.1	0.5	1960	34900
	305	5.8	1.2	1730	37200	3.9	0.9	2000	34400	2.9	0.7	2140	32600	1.9	0.5	2140	32600
4B140 [Dimension Drawings from page 198]	11	159.1	19.0	1000	19000	106.0	18.4	1460	20000	79.1	13.8	1460	22400	52.8	9.2	1460	26100
	13	134.7	19.0	1220	19400	89.7	18.4	1780	20200	67.0	13.8	1780	22800	44.7	9.2	1780	26700
	14	125.0	19.0	1340	19600	83.3	18.4	1950	20300	62.2	13.8	1950	22900	41.5	9.2	1950	27000
	16	109.4	19.0	1530	19800	72.9	18.4	2230	20200	54.4	13.8	2230	23000	36.3	9.2	2230	27200
	18	97.3	19.0	1670	20000	64.8	18.4	2440	20200	48.4	13.8	2440	23000	32.3	9.2	2440	27400
	19	92.2	13.0	1260	22500	61.4	13.0	1890	23400	45.8	11.2	2180	25100	30.6	7.6	2230	29300
	21	83.4	13.0	1380	22700	55.5	13.0	2060	23500	41.5	11.2	2370	25200	27.7	7.7	2440	28000
	22	79.6	13.0	1470	22900	53.0	13.0	2200	23500	39.6	11.3	2570	25000	26.4	7.6	2570	25400
	25	70.0	13.0	1610	23100	46.6	13.0	2410	23600	34.8	10.4	2570	25400	23.2	7.0	2570	25400
	26	67.4	13.0	1670	23200	44.9	13.0	2520	23600	33.5	9.9	2570	25400	22.4	6.6	2570	25400
	28	62.5	13.0	1830	23400	41.7	12.1	2570	24300	31.1	9.1	2570	25400	20.8	6.1	2570	25400
	35	50.0	12.0	2130	24300	33.3	9.7	2570	25400	24.9	7.3	2570	25400	16.6	4.9	2570	25400
	39	44.9	11.0	2130	25200	29.9	8.9	2570	25400	22.4	6.6	2570	25400	14.9	4.4	2570	25400
	42	41.7	10.2	2130	26000	27.8	8.2	2570	25400	20.8	6.1	2570	25400	13.9	4.1	2570	25400
	46	38.1	9.3	2130	27000	25.4	7.5	2570	25400	19.0	5.6	2570	25400	12.7	3.8	2570	25400

Selection Tables for Reducers (60Hz Input)

■ **IMPORTANT**: Please refer to page 144 for Reducer Selection Table notes.

Refer to Page 166-187 for 50 Hz Input

Size	n1	1750				1165				870				580			
	Ratio i	n2 [rpm]	P1 [kW]	Tout [Nm]	Pro [N]	n2 [rpm]	P1 [kW]	Tout [Nm]	Pro [N]	n2 [rpm]	P1 [kW]	Tout [Nm]	Pro [N]	n2 [rpm]	P1 [kW]	Tout [Nm]	Pro [N]
4B140 [Dimension Drawings from page 198]	48	36.5	8.8	2130	27600	24.3	7.1	2570	25400	18.2	5.3	2570	25400	12.1	3.5	2570	25400
	53	33.1	8.1	2130	28600	22.0	6.5	2570	25400	16.5	4.9	2570	25400	11.0	3.3	2570	25400
	54	32.5	7.8	2130	29000	21.6	6.3	2570	25400	16.2	4.7	2570	25400	10.8	3.1	2570	25400
	60	29.2	7.2	2130	30000	19.5	5.8	2570	25400	14.5	4.3	2570	25400	9.7	2.9	2570	25400
	67	26.2	6.3	2130	31400	17.4	5.1	2570	25400	13.0	3.8	2570	25400	8.7	2.6	2570	25400
	74	23.7	5.8	2130	32600	15.8	4.7	2570	25400	11.8	3.5	2570	25400	7.9	2.3	2570	25400
	80	21.9	5.3	2130	32700	14.6	4.3	2570	25400	10.9	3.2	2570	25400	7.3	2.2	2570	25400
	88	19.9	4.9	2130	32700	13.3	3.9	2570	25400	9.9	2.9	2570	25400	6.6	2.0	2570	25400
	93	18.9	4.6	2130	32700	12.6	3.7	2570	25400	9.4	2.7	2570	25400	6.3	1.8	2570	25400
	102	17.2	4.2	2130	32700	11.5	3.4	2570	25400	8.6	2.5	2570	25400	5.7	1.7	2570	25400
	112	15.7	3.8	2130	32700	10.4	3.1	2570	25400	7.8	2.3	2570	25400	5.2	1.6	2570	25400
	123	14.3	3.5	2130	32700	9.5	2.8	2570	25400	7.1	2.1	2570	25400	4.8	1.4	2570	25400
	138	12.7	3.1	2130	32700	8.5	2.5	2570	25400	6.3	1.9	2570	25400	4.2	1.2	2570	25400
	151	11.6	2.9	2130	32700	7.8	2.3	2570	25400	5.8	1.7	2570	25400	3.9	1.2	2570	25400
	163	10.8	2.6	2130	32700	7.2	2.1	2570	25400	5.4	1.6	2570	25400	3.6	1.0	2570	25400
	179	9.8	2.4	2130	32700	6.6	1.9	2570	25400	4.9	1.5	2570	25400	3.3	1.0	2570	25400
	189	9.3	2.2	2130	32700	6.2	1.8	2570	25400	4.6	1.3	2570	25400	3.1	0.9	2570	25400
	207	8.5	2.1	2130	32700	5.7	1.7	2570	25400	4.2	1.3	2570	25400	2.8	0.9	2570	25400
	227	7.8	1.9	2130	32700	5.2	1.5	2570	25400	3.9	1.1	2570	25400	2.6	0.8	2570	25400
	249	7.1	1.7	2130	32700	4.7	1.4	2570	25400	3.5	1.1	2570	25400	2.4	0.7	2570	25400
	278	6.3	1.5	2130	32700	4.2	1.2	2570	25400	3.2	0.9	2570	25400	2.1	0.6	2570	25400
	305	5.8	1.4	2130	32700	3.9	1.2	2570	25400	2.9	0.9	2570	25400	1.9	0.6	2570	25400
4B145 [Dimension Drawings from page 198]	11	159.1	22.0	1160	18300	106.0	18.4	1460	20000	79.1	13.8	1460	22400	52.8	9.2	1460	26100
	13	134.7	22.0	1420	18600	89.7	18.4	1780	20200	67.0	13.8	1780	22800	44.7	9.2	1780	26700
	14	125.0	22.0	1550	18700	83.3	18.4	1950	20300	62.2	13.8	1950	22900	41.5	9.2	1950	27000
	16	109.4	22.0	1770	18800	72.9	18.4	2230	20200	54.4	13.8	2230	23000	36.3	9.2	2230	27200
	18	97.3	22.0	1940	18800	64.8	18.4	2440	20200	48.4	13.8	2440	23000	32.3	9.2	2440	27400
	19	92.2	15.1	1460	21600	61.4	13.9	2020	22800	45.8	11.2	2180	25100	30.6	7.6	2230	29300
	21	83.4	15.1	1600	21800	55.5	13.9	2210	22900	41.5	11.2	2370	25200	27.7	7.7	2440	28000
	22	79.6	15.1	1710	21800	53.0	15.1	2560	22000	39.6	11.3	2570	25000	26.4	7.6	2570	25400
	25	70.0	15.1	1870	22000	46.6	13.9	2570	22900	34.8	10.4	2570	25400	23.2	7.0	2570	25400
	26	67.4	15.1	1940	22000	44.9	13.3	2570	23400	33.5	9.9	2570	25400	22.4	6.6	2570	25400
	28	62.5	15.1	2130	22100	41.7	12.1	2570	24300	31.1	9.1	2570	25400	20.8	6.1	2570	25400
	35	50.0	12.0	2130	24300	33.3	9.7	2570	25400	24.9	7.3	2570	25400	16.6	4.9	2570	25400
	39	44.9	11.0	2130	25200	29.9	8.9	2570	25400	22.4	6.6	2570	25400	14.9	4.4	2570	25400
	42	41.7	10	2130	26000	27.8	8.0	2570	25400	20.8	6.0	2570	25400	13.9	4.0	2570	25400
	46	38.1	9.3	2130	27000	25.4	7.5	2570	25400	19.0	5.6	2570	25400	12.7	3.8	2570	25400
	48	36.5	8.8	2130	27600	24.3	7.1	2570	25400	18.2	5.3	2570	25400	12.1	3.5	2570	25400
	53	33.1	8.1	2130	28600	22.0	6.5	2570	25400	16.5	4.9	2570	25400	11.0	3.3	2570	25400
	54	32.5	7.8	2130	29000	21.6	6.3	2570	25400	16.2	4.7	2570	25400	10.8	3.1	2570	25400
	60	29.2	7.2	2130	30000	19.5	5.8	2570	25400	14.5	4.3	2570	25400	9.7	2.9	2570	25400
	67	26.2	6.3	2130	31400	17.4	5.1	2570	25400	13.0	3.8	2570	25400	8.7	2.6	2570	25400
	74	23.7	5.8	2130	32600	15.8	4.7	2570	25400	11.8	3.5	2570	25400	7.9	2.3	2570	25400
	80	21.9	5.3	2130	32700	14.6	4.3	2570	25400	10.9	3.2	2570	25400	7.3	2.2	2570	25400
	88	19.9	4.9	2130	32700	13.3	3.9	2570	25400	9.9	2.9	2570	25400	6.6	2.0	2570	25400
	93	18.9	4.6	2130	32700	12.6	3.7	2570	25400	9.4	2.7	2570	25400	6.3	1.8	2570	25400
	102	17.2	4.2	2130	32700	11.5	3.4	2570	25400	8.6	2.5	2570	25400	5.7	1.7	2570	25400
	112	15.7	3.8	2130	32700	10.4	3.1	2570	25400	7.8	2.3	2570	25400	5.2	1.6	2570	25400
	123	14.3	3.5	2130	32700	9.5	2.8	2570	25400	7.1	2.1	2570	25400	4.8	1.4	2570	25400
	138	12.7	3.1	2130	32700	8.5	2.5	2570	25400	6.3	1.9	2570	25400	4.2	1.2	2570	25400
	151	11.6	2.9	2130	32700	7.8	2.3	2570	25400	5.8	1.7	2570	25400	3.9	1.2	2570	25400
	163	10.8	2.6	2130	32700	7.2	2.1	2570	25400	5.4	1.6	2570	25400	3.6	1.0	2570	25400
	179	9.8	2.4	2130	32700	6.6	1.9	2570	25400	4.9	1.5	2570	25400	3.3	1.0	2570	25400
	189	9.3	2.2	2130	32700	6.2	1.8	2570	25400	4.6	1.3	2570	25400	3.1	0.9	2570	25400
	207	8.5	2.1	2130	32700	5.7	1.7	2570	25400	4.2	1.3	2570	25400	2.8	0.9	2570	25400
	227	7.8	1.9	2130	32700	5.2	1.5	2570	25400	3.9	1.1	2570	25400	2.6	0.8	2570	25400
	249	7.1	1.7	2130	32700	4.7	1.4	2570	25400	3.5	1.1	2570	25400	2.4	0.7	2570	25400
	278	6.3	1.5	2130	32700	4.2	1.2	2570	25400	3.2	0.9	2570	25400	2.1	0.6	2570	25400
	305	5.8	1.4	2130	32700	3.9	1.2	2570	25400	2.9	0.9	2570	25400	1.9	0.6	2570	25400
4B160	11	159.1	25.3	1340	17500	106.0	23.3	1850	18400	79.1	17.4	1850	20800	52.8	11.6	1850	24500
	13	134.7	25.3	1630	17700	89.7	23.3	2250	18200	67.0	17.4	2250	20700	44.7	11.6	2250	24700
	14	125.0	25.3	1780	17700	83.3	23.3	2470	18100	62.2	17.4	2470	20800	41.5	11.6	2470	24800

Selection Tables for Reducers (60Hz Input)

■ **IMPORTANT**: Please refer to page 144 for Reducer Selection Table notes.

Refer to Page 166-187 for 50 Hz Input

Size	n1	1750				1165				870				580			
	Ratio i	n2 [rpm]	P1 [kW]	Tout [Nm]	Pro [N]	n2 [rpm]	P1 [kW]	Tout [Nm]	Pro [N]	n2 [rpm]	P1 [kW]	Tout [Nm]	Pro [N]	n2 [rpm]	P1 [kW]	Tout [Nm]	Pro [N]
4B160 [Dimension Drawings from page 198]	16	109.4	25.3	2040	17600	72.9	21.3	2570	18800	54.4	15.9	2570	21500	36.3	10.6	2570	25400
	18	97.3	24.2	2130	18000	64.8	19.4	2570	19700	48.4	14.5	2570	22500	32.3	9.7	2570	25400
	19	92.2	22.0	2130	18800	61.4	17.7	2570	20500	45.8	13.2	2570	23400	30.6	8.8	2570	25400
	21	83.4	20.2	2130	19500	55.5	16.2	2570	21400	41.5	12.1	2570	24300	27.7	8.1	2570	25400
	22	79.6	18.9	2130	20000	53.0	15.2	2570	21900	39.6	11.3	2570	25000	26.4	7.6	2570	25400
	25	70.0	17.3	2130	20900	46.6	13.9	2570	22900	34.8	10.4	2570	25400	23.2	7.0	2570	25400
	26	67.4	16.5	2130	21300	44.9	13.3	2570	23400	33.5	9.9	2570	25400	22.4	6.6	2570	25400
	28	62.5	15.1	2130	22100	41.7	12.1	2570	24300	31.1	9.1	2570	25400	20.8	6.1	2570	25400
	35	50.0	12.0	2130	24300	33.3	9.7	2570	25400	24.9	7.3	2570	25400	16.6	4.9	2570	25400
	39	44.9	11.0	2130	25200	29.9	8.9	2570	25400	22.4	6.6	2570	25400	14.9	4.4	2570	25400
	42	41.7	10.2	2130	26000	27.8	8.1	2570	25400	20.8	6.1	2570	25400	13.9	4.1	2570	25400
	46	38.1	9.3	2130	27000	25.4	7.5	2570	25400	19.0	5.6	2570	25400	12.7	3.8	2570	25400
	48	36.5	8.8	2130	27600	24.3	7.1	2570	25400	18.2	5.3	2570	25400	12.1	3.5	2570	25400
	53	33.1	8.1	2130	28600	22.0	6.5	2570	25400	16.5	4.9	2570	25400	11.0	3.3	2570	25400
	54	32.5	7.8	2130	29000	21.6	6.3	2570	25400	16.2	4.7	2570	25400	10.8	3.1	2570	25400
	60	29.2	7.2	2130	30000	19.5	5.8	2570	25400	14.5	4.3	2570	25400	9.7	2.9	2570	25400
	67	26.2	6.3	2130	31400	17.4	5.1	2570	25400	13.0	3.8	2570	25400	8.7	2.6	2570	25400
	74	23.7	5.8	2130	32600	15.8	4.7	2570	25400	11.8	3.5	2570	25400	7.9	2.3	2570	25400
	80	21.9	5.3	2130	32700	14.6	4.3	2570	25400	10.9	3.2	2570	25400	7.3	2.2	2570	25400
	88	19.9	4.9	2130	32700	13.3	3.9	2570	25400	9.9	2.9	2570	25400	6.6	2.0	2570	25400
	93	18.9	4.6	2130	32700	12.6	3.7	2570	25400	9.4	2.7	2570	25400	6.3	1.8	2570	25400
	102	17.2	4.2	2130	32700	11.5	3.4	2570	25400	8.6	2.5	2570	25400	5.7	1.7	2570	25400
	112	15.7	3.8	2130	32700	10.4	3.1	2570	25400	7.8	2.3	2570	25400	5.2	1.6	2570	25400
	123	14.3	3.5	2130	32700	9.5	2.8	2570	25400	7.1	2.1	2570	25400	4.8	1.4	2570	25400
	138	12.7	3.1	2130	32700	8.5	2.5	2570	25400	6.3	1.9	2570	25400	4.2	1.2	2570	25400
	151	11.6	2.9	2130	32700	7.8	2.3	2570	25400	5.8	1.7	2570	25400	3.9	1.2	2570	25400
	163	10.8	2.6	2130	32700	7.2	2.1	2570	25400	5.4	1.6	2570	25400	3.6	1.0	2570	25400
	179	9.8	2.4	2130	32700	6.6	1.9	2570	25400	4.9	1.5	2570	25400	3.3	1.0	2570	25400
	189	9.3	2.2	2130	32700	6.2	1.8	2570	25400	4.6	1.3	2570	25400	3.1	0.9	2570	25400
	207	8.5	2.1	2130	32700	5.7	1.7	2570	25400	4.2	1.3	2570	25400	2.8	0.9	2570	25400
	227	7.8	1.9	2130	32700	5.2	1.5	2570	25400	3.9	1.1	2570	25400	2.6	0.8	2570	25400
	249	7.1	1.7	2130	32700	4.7	1.4	2570	25400	3.5	1.1	2570	25400	2.4	0.7	2570	25400
	278	6.3	1.5	2130	32700	4.2	1.2	2570	25400	3.2	0.9	2570	25400	2.1	0.6	2570	25400
	305	5.8	1.4	2130	32700	3.9	1.2	2570	25400	2.9	0.9	2570	25400	1.9	0.6	2570	25400
4B165 [Dimension Drawings from page 198]	11	159.1	29.0	1530	16700	106.0	23.3	1850	18400	79.1	17.4	1850	20800	52.8	11.6	1850	24500
	13	134.7	29.0	1870	16700	89.7	23.3	2250	18200	67.0	17.4	2250	20700	44.7	11.6	2250	24700
	14	125.0	29.0	2040	16600	83.3	23.3	2470	18100	62.2	17.4	2470	20800	41.5	11.6	2470	24800
	16	109.4	26.5	2130	17200	72.9	21.3	2570	18800	54.4	15.9	2570	21500	36.3	10.6	2570	25400
	18	97.3	24.2	2130	18000	64.8	19.4	2570	19700	48.4	14.5	2570	22500	32.3	9.7	2570	25400
	19	92.2	22	2130	18800	61.4	17.7	2570	20500	45.8	13.2	2570	23400	30.6	8.8	2570	25400
	21	83.4	20.2	2130	19500	55.5	16.2	2570	21400	41.5	12.1	2570	24300	27.7	8.1	2570	25400
	22	79.6	18.9	2130	20000	53.0	15.2	2570	21900	39.6	11.3	2570	25000	26.4	7.6	2570	25400
	25	70.0	17.3	2130	20900	46.6	13.9	2570	22900	34.8	10.4	2570	25400	23.2	7.0	2570	25400
	26	67.4	16.5	2130	21300	44.9	13.3	2570	23400	33.5	9.9	2570	25400	22.4	6.6	2570	25400
	28	62.5	15.1	2130	22100	41.7	12.1	2570	24300	31.1	9.1	2570	25400	20.8	6.1	2570	25400
	35	50.0	12.0	2130	24300	33.3	9.7	2570	25400	24.9	7.3	2570	25400	16.6	4.9	2570	25400
	39	44.9	11.0	2130	25200	29.9	8.9	2570	25400	22.4	6.6	2570	25400	14.9	4.4	2570	25400
	42	41.7	10.2	2130	26000	27.8	8.2	2570	25400	20.8	6.1	2570	25400	13.9	4.1	2570	25400
	46	38.1	9.3	2130	27600	25.4	7.5	2570	25400	19.0	5.6	2570	25400	12.7	3.8	2570	25400
	48	36.5	8.8	2130	26000	24.3	7.1	2570	25400	18.2	5.3	2570	25400	12.1	3.5	2570	25400
	53	33.1	8.1	2130	28600	22.0	6.5	2570	25400	16.5	4.9	2570	25400	11.0	3.3	2570	25400
	54	32.5	7.8	2130	29000	21.6	6.3	2570	25400	16.2	4.7	2570	25400	10.8	3.1	2570	25400
	60	29.2	7.2	2130	30000	19.5	5.8	2570	25400	14.5	4.3	2570	25400	9.7	2.9	2570	25400
	67	26.2	6.3	2130	31400	17.4	5.1	2570	25400	13.0	3.8	2570	25400	8.7	2.6	2570	25400
	74	23.7	5.8	2130	32600	15.8	4.7	2570	25400	11.8	3.5	2570	25400	7.9	2.3	2570	25400
	80	21.9	5.3	2130	32700	14.6	4.3	2570	25400	10.9	3.2	2570	25400	7.3	2.2	2570	25400
	88	19.9	4.9	2130	32700	13.3	3.9	2570	25400	9.9	2.9	2570	25400	6.6	2.0	2570	25400
	93	18.9	4.6	2130	32700	12.6	3.7	2570	25400	9.4	2.7	2570	25400	6.3	1.8	2570	25400
	102	17.2	4.2	2130	32700	11.5	3.4	2570	25400	8.6	2.5	2570	25400	5.7	1.7	2570	25400
	112	15.7	3.8	2130	32700	10.4	3.1	2570	25400	7.8	2.3	2570	25400	5.2	1.6	2570	25400
	123	14.3	3.5	2130	32700	9.5	2.8	2570	25400	7.1	2.1	2570	25400	4.8	1.4	2570	25400
	138	12.7	3.1	2130	32700	8.5	2.5	2570	25400	6.3	1.9	2570	25400	4.2	1.2	2570	25400

Selection Tables for Reducers (60Hz Input)

■ **IMPORTANT**: Please refer to page 144 for Reducer Selection Table notes.

Refer to Page 166-187 for 50 Hz Input

Size	n1	1750				1165				870				580			
	Ratio i	n2 [rpm]	P1 [kW]	Tout [Nm]	Pro [N]	n2 [rpm]	P1 [kW]	Tout [Nm]	Pro [N]	n2 [rpm]	P1 [kW]	Tout [Nm]	Pro [N]	n2 [rpm]	P1 [kW]	Tout [Nm]	Pro [N]
4B165 [Dimension Drawings from page 198]	151	11.6	2.9	2130	32700	7.8	2.3	2570	25400	5.8	1.7	2570	25400	3.9	1.2	2570	25400
	163	10.8	2.6	2130	32700	7.2	2.1	2570	25400	5.4	1.6	2570	25400	3.6	1.0	2570	25400
	179	9.8	2.4	2130	32700	6.6	1.9	2570	25400	4.9	1.5	2570	25400	3.3	1.0	2570	25400
	189	9.3	2.2	2130	32700	6.2	1.8	2570	25400	4.6	1.3	2570	25400	3.1	0.9	2570	25400
	207	8.5	2.1	2130	32700	5.7	1.7	2570	25400	4.2	1.3	2570	25400	2.8	0.9	2570	25400
	227	7.8	1.9	2130	32700	5.2	1.5	2570	25400	3.9	1.1	2570	25400	2.6	0.8	2570	25400
	249	7.1	1.7	2130	32700	4.7	1.4	2570	25400	3.5	1.1	2570	25400	2.4	0.7	2570	25400
	278	6.3	1.5	2130	32700	4.2	1.2	2570	25400	3.2	0.9	2570	25400	2.1	0.6	2570	25400
	305	5.8	1.4	2130	32700	3.9	1.2	2570	25400	2.9	0.9	2570	25400	1.9	0.6	2570	25400
4C140 [Dimension Drawings from page 198]	11	159.1	19.0	1000	28200	106.0	18.4	1460	30600	79.1	13.8	1460	33900	52.8	9.2	1460	39000
	13	134.7	19.0	1220	29300	89.7	18.4	1780	31600	67.0	13.8	1780	35100	44.7	9.2	1780	40500
	14	125.0	19.0	1340	29800	83.3	18.4	1950	32000	62.2	13.8	1950	35600	41.5	9.2	1950	41200
	16	109.4	19.0	1530	30500	72.9	18.4	2230	32500	54.4	13.8	2230	36300	36.3	9.2	2230	42100
	18	97.3	19.0	1670	31000	64.8	18.4	2440	32900	48.4	13.8	2440	36800	32.3	9.2	2440	42700
	19	92.2	13.0	1260	33600	61.4	13.0	1890	36200	45.8	11.2	2180	39100	30.6	7.6	2230	45000
	21	83.4	13.0	1380	34200	55.5	13.0	2060	36700	41.5	11.2	2370	39600	27.7	7.7	2440	45600
	22	79.6	13.0	1470	34500	53.0	13.0	2200	37000	39.6	12.3	2780	38900	26.4	9.0	3060	44300
	25	70.0	13.0	1610	35200	46.6	13.0	2410	37500	34.8	12.3	3040	39400	23.2	9.0	3350	44800
	26	67.4	13.0	1670	35400	44.9	13.0	2520	37700	33.5	10.6	2750	41100	22.4	7.8	3030	46800
	28	62.5	13.0	1830	36000	41.7	13.0	2750	38100	31.1	10.6	3010	41600	20.8	7.8	3320	47300
	35	50.0	13.0	2310	37200	33.3	13.0	3460	38800	24.9	10.7	3800	42300	16.6	7.2	3800	49600
	39	44.9	13.0	2520	37700	29.9	13.0	3780	39100	22.4	10.7	4160	42600	14.9	7.2	4160	50100
	42	41.7	13.0	2720	38100	27.8	12.1	3800	40300	20.8	9.04	3810	45300	13.9	6.0	3800	53000
	46	38.1	13.0	2980	38400	25.4	12.1	4160	40500	19.0	9.1	4160	45600	12.7	6.1	4160	53500
	48	36.5	12.0	2900	39500	24.3	10.5	3810	42700	18.2	7.8	3800	47900	12.1	5.2	3800	55900
	53	33.1	12.0	3170	39900	22.0	10.5	4160	42900	16.5	7.9	4160	48300	11.0	5.3	4160	54100
	54	32.5	10.1	2760	42000	21.6	9.3	3800	44900	16.2	6.9	3800	50300	10.8	4.6	3810	57400
	60	29.2	10.1	3010	42500	19.5	9.3	4160	45200	14.5	7.0	4160	50700	9.7	4.7	4160	54100
	67	26.2	8.7	2930	44700	17.4	7.5	3800	48600	13.0	5.6	3800	54400	8.7	3.8	3800	57400
	74	23.7	8.7	3200	45300	15.8	7.5	4160	49100	11.8	5.6	4160	54100	7.9	3.8	4160	54100
	80	21.9	6.9	2770	48300	14.6	6.3	3800	52000	10.9	4.7	3800	57400	7.3	3.2	3800	57400
	88	19.9	6.9	3030	49000	13.3	6.3	4160	52600	9.9	4.7	4160	54100	6.6	3.2	4160	54100
	93	18.9	6.0	2780	51000	12.6	5.4	3800	55100	9.4	4.1	3800	57400	6.3	2.7	3800	57400
	102	17.2	6.0	3040	51700	11.5	5.5	4160	54100	8.6	4.1	4160	54100	5.7	2.7	4160	54100
	112	15.7	5.3	2930	53900	10.4	4.5	3800	57400	7.8	3.4	3800	57400	5.2	2.3	3800	57400
	123	14.3	5.3	3210	54700	9.5	4.5	4160	54100	7.1	3.4	4160	54100	4.8	2.3	4160	54100
	138	12.7	3.9	2730	58900	8.5	3.7	3810	57400	6.3	2.7	3800	57400	4.2	1.8	3800	57400
	151	11.6	4.0	2990	59800	7.8	3.7	4160	54100	5.8	2.8	4160	54100	3.9	1.9	4160	54100
	163	10.8	3.4	2820	62200	7.2	3.1	3800	57400	5.4	2.3	3800	57400	3.6	1.5	3820	57400
	179	9.8	3.5	3080	62700	6.6	3.1	4160	54100	4.9	2.3	4160	54100	3.3	1.6	4160	54100
	189	9.3	3.0	2810	64300	6.2	2.7	3810	57400	4.6	2.0	3800	57400	3.1	1.3	3810	57400
	207	8.5	3.0	3080	62800	5.7	2.7	4160	54100	4.2	2.0	4160	54100	2.8	1.4	4160	54100
	227	7.8	2.4	2780	64500	5.2	2.2	3810	57400	3.9	1.7	3790	57400	2.6	1.1	3790	57400
	249	7.1	2.5	3040	63000	4.7	2.3	4160	54100	3.5	1.7	4160	54100	2.4	1.1	4160	54100
	278	6.3	2.0	2770	64500	4.2	1.8	3810	57400	3.2	1.35	3800	57400	2.1	0.9	3800	57400
	305	5.8	2.0	3030	63000	3.9	1.9	4160	54100	2.9	1.4	4160	54100	1.9	0.9	4160	54100
4C145 [Dimension Drawings from page 198]	11	159.1	22.0	1160	27600	106.0	18.4	1460	30600	79.1	13.8	1460	33900	52.8	9.2	1460	39000
	13	134.7	22.0	1420	28500	89.7	18.4	1780	31600	67.0	13.8	1780	35100	44.7	9.2	1780	40500
	14	125.0	22.0	1550	29000	83.3	18.4	1950	32000	62.2	13.8	1950	35600	41.5	9.2	1950	41200
	16	109.4	22.0	1770	29600	72.9	18.4	2230	32500	54.4	13.8	2230	36300	36.3	9.2	2230	42100
	18	97.3	22.0	1940	30000	64.8	18.4	2440	32900	48.4	13.8	2440	36800	32.3	9.2	2440	42700
	19	92.2	15.1	1460	32800	61.4	13.9	2020	35700	45.8	11.2	2180	39100	30.6	7.6	2230	45000
	21	83.4	15.1	1600	33300	55.5	13.9	2210	36100	41.5	11.2	2370	39600	27.7	7.7	2440	45600
	22	79.6	15.1	1710	33600	53.0	15.1	2560	35600	39.6	12.3	2780	38900	26.4	9.0	3060	44300
	25	70.0	15.1	1870	34200	46.6	15.1	2800	36000	34.8	12.3	3040	39400	23.2	9.0	3350	44800
	26	67.4	15.1	1940	34400	44.9	13.3	2570	37500	33.5	10.6	2750	41100	22.4	7.8	3030	46800
	28	62.5	15.1	2130	34900	41.7	13.3	2810	37900	31.1	10.6	3010	41600	20.8	7.8	3320	47300
	35	50.0	15.1	2680	35800	33.3	13.8	3660	38100	24.9	11.0	3920	41800	16.6	7.6	4010	48800
	39	44.9	15.1	2930	36200	29.9	13.8	4000	38300	22.4	11.0	4290	42100	14.9	7.6	4390	49300
	42	41.7	15.1	3160	36500	27.8	13.5	4240	38700	20.8	10.1	4250	43600	13.9	6.7	4260	51300
	46	38.1	15.1	3650	36700	25.4	13.5	4630	38700	19.0	10.1	4650	43800	12.7	6.8	4650	48700
	48	36.5	15.1	3560	36800	24.3	11.6	4210	41100	18.2	8.7	4220	46300	12.1	5.8	4220	53600
	53	33.1	14.6	3850	37400	22.0	11.6	4610	41200	16.5	8.7	4610	46600	11.0	5.8	4610	49200
	54	32.5	12.0	3280	40000	21.6	10.3	4230	43200	16.2	7.7	4260	48600	10.8	5.2	4250	53200
	60	29.2	12.0	3590	40300	19.5	10.3	4650	43300	14.5	7.8	4650	48700	9.7	5.2	4650	48700
	67	26.2	11.0	3700	41800	17.4	8.1	4080	47600	13.0	6.2	4160	53100	8.7	4.1	4160	54200
	74	23.7	11.0	4050	42100	15.8	8.1	4460	48000	11.8	6.2	4550	50000	7.9	4.1	4550	50000
	80	21.9	8.0	3180	46700	14.6	7.1	4250	50300	10.9	5.3	4250	53200	7.3	3.5	4250	53200
	88	19.9	8.0	3480	47300	13.3	7.1	4650	48700	9.9	5.3	4650	48700	6.6	3.5	4650	48700
	93	18.9	7.5	3520	48200	12.6	6.1	4260	53200	9.4	4.5	4250	53200	6.3	3.0	4250	53200

Selection Tables for Reducers (60Hz Input)

■ **IMPORTANT**: Please refer to page 144 for Reducer Selection Table notes.

Refer to Page 166-187 for 50 Hz Input

Size	n1	1750				1165				870				580			
	Ratio i	n2 [rpm]	P1 [kW]	Tout [Nm]	Pro [N]	n2 [rpm]	P1 [kW]	Tout [Nm]	Pro [N]	n2 [rpm]	P1 [kW]	Tout [Nm]	Pro [N]	n2 [rpm]	P1 [kW]	Tout [Nm]	Pro [N]
4C145 [Dimension Drawings from page 198]	102	17.2	7.6	3850	48700	11.5	6.1	4650	48700	8.6	4.6	4650	48700	5.7	3.1	4650	48700
	112	15.7	7.6	4250	49000	10.4	5.1	4250	53200	7.8	3.8	4250	53200	5.2	2.5	4250	53200
	123	14.3	7.0	4260	50800	9.5	5.1	4650	48700	7.1	3.8	4650	48700	4.8	2.5	4650	48700
	138	12.7	5.4	3730	55100	8.5	4.0	4110	54600	6.3	3.1	4260	53200	4.2	2.0	4260	53200
	151	11.6	5.4	4080	54900	7.8	4.0	4490	50600	5.8	3.1	4650	48700	3.9	2.1	4650	48700
	163	10.8	4.2	3470	59700	7.2	3.1	3860	56900	5.4	2.5	4130	54400	3.6	1.7	4260	53200
	179	9.8	4.3	3790	57500	6.6	3.2	4220	53500	4.9	2.5	4520	50200	3.3	1.8	4650	48700
	189	9.3	3.7	3470	60100	6.2	2.7	3840	57100	4.6	2.2	4110	54600	3.1	1.5	4240	53200
	207	8.5	3.7	3800	57500	5.7	2.7	4200	53700	4.2	2.2	4500	50500	2.8	1.5	4650	48700
	227	7.8	3.0	3460	60100	5.2	2.2	3810	57400	3.9	1.8	4070	54900	2.6	1.2	4100	54600
	249	7.1	3.1	3790	57600	4.7	2.3	4170	54100	3.5	1.8	4460	50900	2.4	1.2	4500	50600
	278	6.3	2.5	3470	60000	4.2	1.8	3850	57100	3.2	1.4	3890	56800	2.1	0.9	3880	56800
	305	5.8	2.5	3800	57500	3.9	1.9	4200	53700	2.9	1.4	4240	53300	1.9	1.0	4240	53300
4C160 [Dimension Drawings from page 198]	11	159.1	25.3	1340	26900	106.0	25.3	2010	28600	79.1	25.3	2690	29300	52.8	20.5	3260	32300
	13	134.7	25.3	1630	27700	89.7	25.3	2450	29100	67.0	25.3	3280	29500	44.7	20.5	3980	32200
	14	125.0	25.3	1780	28100	83.3	25.3	2680	29300	62.2	25.3	3580	29500	41.5	20.5	4350	32200
	16	109.4	25.3	2040	28600	72.9	25.3	3060	29400	54.4	25.3	4100	29300	36.3	20.5	4970	31800
	18	97.3	25.3	2230	28900	64.8	25.3	3350	29500	48.4	25.3	4480	29200	32.3	19.3	5140	32600
	19	92.2	25.3	2440	29100	61.4	25.3	3670	29500	45.8	21.2	4120	31800	30.6	14.1	4110	37900
	21	83.4	25.3	2670	29300	55.5	25.3	4020	29400	41.5	21.2	4500	31700	27.7	14.1	4500	37900
	22	79.6	20.3	2290	31500	53.0	20.3	3440	32400	39.6	20.3	4600	32100	26.4	14.4	4900	37400
	25	70.0	20.3	2500	31800	46.6	20.3	3760	32500	34.8	20.3	5030	32000	23.2	13.8	5140	38100
	26	67.4	19.7	2540	32200	44.9	19.7	3810	32900	33.5	19.7	5100	32400	22.4	13.2	5140	38900
	28	62.5	19.7	2770	32500	41.7	19.7	4170	32800	31.1	18.1	5140	33700	20.8	12.1	5140	40500
	35	50.0	19.7	3490	32800	33.3	19.3	5140	32500	24.9	14.4	5140	37300	16.6	9.7	5140	41900
	39	44.9	19.7	3820	32900	29.9	17.7	5140	34100	22.4	13.2	5140	38900	14.9	8.8	5140	41900
	42	41.7	19.7	4120	32800	27.8	16.3	5140	35300	20.8	12.2	5140	40300	13.9	8.1	5140	41900
	46	38.1	18.6	4260	33700	25.4	14.9	5140	36800	19.0	11.2	5140	41900	12.7	7.5	5140	41900
	48	36.5	17.6	4260	34400	24.3	14.2	5140	37700	18.2	10.6	5140	41900	12.1	7.1	5140	41900
	53	33.1	16.1	4260	35800	22.0	13.0	5140	39300	16.5	9.7	5140	41900	11.0	6.5	5140	41900
	54	32.5	13.1	3590	38900	21.6	12.5	5140	39900	16.2	9.3	5140	41900	10.8	6.2	5140	41900
	60	29.2	13.1	3910	39100	19.5	11.4	5140	41500	14.5	8.6	5140	41900	9.7	5.7	5140	41900
	67	26.2	12.6	4260	39700	17.4	10.1	5140	41900	13.0	7.6	5140	41900	8.7	5.1	5140	41900
	74	23.7	11.5	4260	41300	15.8	9.3	5140	41900	11.8	7.0	5140	41900	7.9	4.7	5140	41900
	80	21.9	9.9	3970	43800	14.6	8.5	5140	41900	10.9	6.4	5140	41900	7.3	4.3	5140	41900
	88	19.9	9.7	4260	44400	13.3	7.8	5140	41900	9.9	5.8	5140	41900	6.6	3.9	5140	41900
	93	18.9	9.1	4260	45500	12.6	7.3	5140	41900	9.4	5.5	5140	41900	6.3	3.7	5140	41900
	102	17.2	8.4	4260	47100	11.5	6.7	5140	41900	8.6	5.0	5140	41900	5.7	3.4	5140	41900
	112	15.7	7.6	4260	48900	10.4	6.1	5140	41900	7.8	4.6	5140	41900	5.2	3.1	5140	41900
	123	14.3	7.0	4260	50800	9.5	5.6	5140	41900	7.1	4.2	5140	41900	4.8	2.8	5140	41900
	138	12.7	6.2	4260	53100	8.5	4.9	5140	41900	6.3	3.7	5140	41900	4.2	2.5	5140	41900
	151	11.6	5.7	4260	53100	7.8	4.6	5140	41900	5.8	3.4	5140	41900	3.9	2.3	5140	41900
	163	10.8	5.2	4260	53100	7.2	4.2	5140	41900	5.4	3.1	5140	41900	3.6	2.1	5140	41900
	179	9.8	4.8	4260	53100	6.6	3.9	5140	41900	4.9	2.9	5140	41900	3.3	1.9	5140	41900
	189	9.3	4.4	4200	53700	6.2	3.6	5140	41900	4.6	2.7	5140	41900	3.1	1.8	5140	41900
	207	8.5	4.1	4260	53100	5.7	3.3	5140	41900	4.2	2.5	5140	41900	2.8	1.7	5140	41900
	227	7.8	3.5	3970	56000	5.2	3.0	5140	41900	3.9	2.2	5140	41900	2.6	1.5	5140	41900
	249	7.1	3.5	4260	53100	4.7	2.8	5140	41900	3.5	2.1	5140	41900	2.4	1.4	5140	41900
	278	6.3	3.0	4260	53100	4.2	2.4	5140	41900	3.2	1.8	5140	41900	2.1	1.2	5140	41900
	305	5.8	2.8	4260	53100	3.9	2.3	5140	41900	2.9	1.7	5140	41900	1.9	1.2	5140	41900
4C165 [Dimension Drawings from page 198]	11	159.1	30.0	1580	26000	106.0	30.0	2380	27200	79.1	30.0	3190	27500	52.8	20.5	3260	32300
	13	134.7	30.0	1930	26600	89.7	30.0	2900	27400	67.0	30.0	3890	27200	44.7	20.5	3980	32200
	14	125.0	30.0	2110	26900	83.3	30.0	3170	27500	62.2	30.0	4250	27100	41.5	20.5	4350	32200
	16	109.4	30.0	2420	27100	72.9	30.0	3630	27300	54.4	28.1	4550	27500	36.3	20.5	4970	31800
	18	97.3	30.0	2640	27300	64.8	30.0	3970	27200	48.4	28.1	4980	27300	32.3	19.3	5140	32600
	19	92.2	30.0	2900	27400	61.4	28.3	4110	27900	45.8	21.2	4120	31800	30.6	14.1	4100	37900
	21	83.4	30.0	3170	27500	55.5	28.3	4500	27600	41.5	21.2	4500	31700	27.7	14.1	4500	37900
	22	79.6	24.1	2710	29900	53.0	24.1	4080	30000	39.6	21.6	4900	31000	26.4	14.4	4900	37400
	25	70.0	24.1	2960	30100	46.6	24.1	4460	29900	34.8	20.7	5140	31600	23.2	13.8	5140	38100
	26	67.4	24.1	3100	30100	44.9	24.1	4660	29700	33.5	19.8	5140	32200	22.4	13.2	5140	38900
	28	62.5	24.1	3390	30200	41.7	24.1	5100	29400	31.1	18.1	5140	33700	20.8	12.1	5140	40500
	35	50.0	24.0	4260	29900	33.3	19.3	5140	32500	24.9	14.4	5140	37300	16.6	9.7	5140	41900
	39	44.9	22.0	4260	31200	29.9	17.7	5140	34100	22.4	13.2	5140	38900	14.9	8.8	5140	41900
	42	41.7	20.0	4260	32300	27.8	16.0	5140	35300	20.8	12.0	5140	40300	13.9	8.0	5140	41900
	46	38.1	18.6	4260	33700	25.4	14.9	5140	36800	19.0	11.2	5140	41900	12.7	7.5	5140	41900
	48	36.5	17.6	4260	34400	24.3	14.2	5140	37700	18.2	10.6	5140	41900	12.1	7.1	5140	41900
	53	33.1	16.1	4260	35800	22.0	13.0	5140	39300	16.5	9.7	5140	41900	11.0	6.5	5140	41900
	54	32.5	15.6	1260	36400	21.6	12.5	5140	39900	16.2	9.3	5140	41900	10.8	6.2	5140	41900
	60	29.2	14.2	4260	37800	19.5	11.4	5140	41500	14.5	8.6	5140	41900	9.7	5.7	5140	41900
	67	26.2	12.6	4260	39700	17.4	10.1	5140	41900	13.0	7.6	5140	41900	8.7	5.1	5140	41900
	74	23.7	11.5	4260	41300	15.8	9.3	5140	41900	11.8	7.0	5140	41900	7.9	4.7	5140	41900
	80	21.9	10.6	4260	42700	14.6	8.5	5140	41900	10.9	6.4	5140	41900	7.3	4.3	5140	41900
	88	19.9	9.7	4260	44400	13.3	7.8	5140	41900	9.9	5.8	5140	41900	6.6	3.9	5140	41900
	93	18.9	9.1	4260	45500	12.6	7.3	5140	41900	9.4	5.5	5140	41900	6.3	3.7	5140	41900
	102	17.2	8.4	4260	47100	11.5	6.7	5140	41900	8.6	5.0	5140	41900	5.7	3.4	5140	41900
	112	15.7	7.6	4260	48900	10.4	6.1	5140	41900	7.8	4.6	5140	41900	5.2	3.1	5140	41900
	123	14.3	7.0	4260	50800	9.5	5.6	5140	41900	7.1	4.2	5140	41900	4.8	2.8	5140	41900
	138	12.7	6.2	4260	45500	8.5	4.9	5140	41900	6.3	3.7	5140	41900	4.2	2.5	5140	41900

Selection Tables for Reducers (60Hz Input)

■ **IMPORTANT**: Please refer to page 144 for Reducer Selection Table notes.

Refer to Page 166-187 for 50 Hz Input

Size	n1	1750				1165				870				580			
	Ratio i	n2 [rpm]	P1 [kW]	Tout [Nm]	Pro [N]	n2 [rpm]	P1 [kW]	Tout [Nm]	Pro [N]	n2 [rpm]	P1 [kW]	Tout [Nm]	Pro [N]	n2 [rpm]	P1 [kW]	Tout [Nm]	Pro [N]
4C165 [Dimension Drawings from page 198]	151	11.6	5.7	4260	53100	7.8	4.6	5140	41900	5.8	3.4	5140	41900	3.9	2.3	5140	41900
	163	10.8	5.2	4260	53100	7.2	4.2	5140	41900	5.4	3.1	5140	41900	3.6	2.1	5140	41900
	179	9.8	4.8	4260	53100	6.6	3.9	5140	41900	4.9	2.9	5140	41900	3.3	1.9	5140	41900
	189	9.3	4.5	4260	53100	6.2	3.6	5140	41900	4.6	2.7	5140	41900	3.1	1.8	5140	41900
	207	8.5	4.1	4260	53100	5.7	3.3	5140	41900	4.2	2.5	5140	41900	2.8	1.7	5140	41900
	227	7.8	3.7	4260	53100	5.2	3.0	5140	41900	3.9	2.2	5140	41900	2.6	1.5	5140	41900
	249	7.1	3.5	4260	53100	4.7	2.8	5140	41900	3.5	2.1	5140	41900	2.4	1.4	5140	41900
	278	6.3	3.0	4260	53100	4.2	2.4	5140	41900	3.2	1.8	5140	41900	2.1	1.2	5140	41900
	305	5.8	2.8	4260	53100	3.9	2.3	5140	41900	2.9	1.7	5140	41900	1.9	1.2	5140	41900
4C170 [Dimension Drawings from page 198]	11	159.1	41.5 ※	2190	23700	106.0	41.5	3290	23800	79.1	37.4	3970	24600	52.8	24.9	3970	29600
	13	134.7	41.5 ※	2670	23900	89.7	41.5	4010	23300	67.0	35.8	4640	24400	44.7	24.9	4840	29100
	14	125.0	41.5 ※	2920	23900	83.3	41.2	4360	23100	62.2	33.6	4760	25200	41.5	23.1	4900	30200
	16	109.4	41.5 ※	3340	23700	72.9	37.9	4580	23800	54.4	30.9	5000	26000	36.3	21.2	5140	31200
	18	97.3	41.5 ※	3650	23600	64.8	35.5	4700	24500	48.4	28.0	4960	27400	32.3	18.7	4960	33300
	19	92.2	33.9	3270	26000	61.4	33.5	4870	25000	45.8	26.5	5140	28000	30.6	17.6	5140	34100
	21	83.4	33.9	3580	25900	55.5	28.9	4590	27300	41.5	21.6	4590	31300	27.7	14.4	4590	37600
	22	79.6	33.9	3820	25700	53.0	28.9	4900	27000	39.6	21.6	4900	31100	26.4	14.4	4900	37500
	25	70.0	33.9	4180	25600	46.6	27.7	5130	27400	34.8	20.7	5140	31600	23.2	13.8	5140	38100
	26	67.4	33.1	4260	25800	44.9	26.6	5140	27900	33.5	19.8	5140	32200	22.4	13.2	5140	38900
	28	62.5	30.2	4260	26900	41.7	24.3	5140	29200	31.1	18.1	5140	33700	20.8	12.1	5140	40500
	35	50.0	24.0	4260	29900	33.3	19.3	5140	32500	24.9	14.4	5140	37300	16.6	9.7	5140	41900
	39	44.9	22.0	4260	31200	29.9	17.7	5140	34100	22.4	13.2	5140	38900	14.9	8.8	5140	41900
	42	41.7	20.3	4260	32300	27.8	16.3	5140	35300	20.8	12.2	5140	40300	13.9	8.1	5140	41900
	46	38.1	18.6	4260	33700	25.4	14.9	5140	36800	19.0	11.2	5140	41900	12.7	7.5	5140	41900
	48	36.5	17.6	4260	34400	24.3	14.2	5140	37700	18.2	10.6	5140	41900	12.1	7.1	5140	41900
	53	33.1	16.1	4260	35800	22.0	13.0	5140	39300	16.5	9.7	5140	41900	11.0	6.5	5140	41900
	54	32.5	15.6	4260	36400	21.6	12.5	5140	39900	16.2	9.3	5140	41900	10.8	6.2	5140	41900
	60	29.2	14.2	4260	37800	19.5	11.4	5140	41500	14.5	8.6	5140	41900	9.7	5.7	5140	41900
	67	26.2	12.6	4260	39700	17.4	10.1	5140	41900	13.0	7.6	5140	41900	8.7	5.1	5140	41900
	74	23.7	11.5	4260	41300	15.8	9.3	5140	41900	11.8	7.0	5140	41900	7.9	4.7	5140	41900
	80	21.9	10.6	4260	42700	14.6	8.5	5140	41900	10.9	6.4	5140	41900	7.3	4.3	5140	41900
	88	19.9	9.7	4260	44400	13.3	7.8	5140	41900	9.9	5.8	5140	41900	6.6	3.9	5140	41900
	93	18.9	9.1	4260	45500	12.6	7.3	5140	41900	9.4	5.5	5140	41900	6.3	3.7	5140	41900
	102	17.2	8.4	4260	47100	11.5	6.7	5140	41900	8.6	5.0	5140	41900	5.7	3.4	5140	41900
	112	15.7	7.6	4260	48900	10.4	6.1	5140	41900	7.8	4.6	5140	41900	5.2	3.1	5140	41900
	123	14.3	7.0	4260	50800	9.5	5.6	5140	41900	7.1	4.2	5140	41900	4.8	2.8	5140	41900
	138	12.7	6.2	4260	53100	8.5	4.9	5140	41900	6.3	3.7	5140	41900	4.2	2.5	5140	41900
	151	11.6	5.7	4260	53100	7.8	4.6	5140	41900	5.8	3.4	5140	41900	3.9	2.3	5140	41900
	163	10.8	5.2	4260	53100	7.2	4.2	5140	41900	5.4	3.1	5140	41900	3.6	2.1	5140	41900
	179	9.8	4.8	4260	53100	6.6	3.9	5140	41900	4.9	2.9	5140	41900	3.3	1.9	5140	41900
	189	9.3	4.5	4260	53100	6.2	3.6	5140	41900	4.6	2.7	5140	41900	3.1	1.8	5140	41900
	207	8.5	4.1	4260	53100	5.7	3.3	5140	41900	4.2	2.5	5140	41900	2.8	1.7	5140	41900
	227	7.8	3.7	4260	53100	5.2	3.0	5140	41900	3.9	2.2	5140	41900	2.6	1.5	5140	41900
	249	7.1	3.5	4260	53100	4.7	2.8	5140	41900	3.5	2.1	5140	41900	2.4	1.4	5140	41900
	278	6.3	3.0	4260	53100	4.2	2.4	5140	41900	3.2	1.8	5140	41900	2.1	1.2	5140	41900
	305	5.8	2.8	4260	53100	3.9	2.3	5140	41900	2.9	1.7	5140	41900	1.9	1.2	5140	41900
4C175 [Dimension Drawings from page 198]	11	159.1	45.0 ※	2380	23000	106.0	45.0	3570	22700	79.1	37.4	3970	24600	52.8	24.9	3970	29600
	13	134.7	45.0 ※	2900	23000	89.7	43.9	4250	22400	67.0	35.8	4640	24400	44.7	24.9	4840	29100
	14	125.0	45.0 ※	3170	23000	83.3	41.2	4360	23100	62.2	33.6	4760	25200	41.5	23.1	4900	30200
	16	109.4	45.0 ※	3620	22700	72.9	37.9	4580	23800	54.4	30.9	5000	26000	36.3	21.2	5140	31200
	18	97.3	45.0 ※	3960	22400	64.8	35.5	4700	24500	48.4	28.0	4960	27400	32.3	18.7	4960	33300
	19	92.2	37.0	3570	24900	61.4	33.5	4870	25000	45.8	26.5	5140	28000	30.6	17.6	5140	34100
	21	83.4	36.0	3800	25100	55.5	28.9	4590	27300	41.5	21.6	4590	31300	27.7	14.4	4590	37600
	22	79.6	36.0	4060	24900	53.0	28.9	4900	27000	39.6	21.6	4900	31100	26.4	14.4	4900	37500
	25	70.0	34.5	4260	25300	46.6	27.7	5130	27400	34.8	20.7	5140	31600	23.2	13.8	5140	38100
	26	67.4	33.1	4260	25800	44.9	26.6	5140	27900	33.5	19.8	5140	32200	22.4	13.2	5140	38900
	28	62.5	30.2	4260	26900	41.7	24.3	5140	29200	31.1	18.1	5140	33700	20.8	12.1	5140	40500
	35	50.0	24.0	4260	29900	33.3	19.3	5140	32500	24.9	14.4	5140	37300	16.6	9.7	5140	41900
	39	44.9	22.0	4260	31200	29.9	17.7	5140	34100	22.4	13.2	5140	38900	14.9	8.8	5140	41900
	42	41.7	20.3	4260	32300	27.8	16.3	5140	35300	20.8	12.2	5140	40300	13.9	8.1	5140	41900
	46	38.1	18.6	4260	33700	25.4	14.9	5140	36800	19.0	11.2	5140	41900	12.7	7.5	5140	41900
	48	36.5	17.6	4260	34400	24.3	14.2	5140	37700	18.2	10.6	5140	41900	12.1	7.1	5140	41900
	53	33.1	16.1	4260	35800	22.0	13.0	5140	39300	16.5	9.7	5140	41900	11.0	6.5	5140	41900
	54	32.5	15.6	4260	36400	21.6	12.5	5140	39900	16.2	9.3	5140	41900	10.8	6.2	5140	41900
	60	29.2	14.2	4260	37800	19.5	11.4	5140	41500	14.5	8.6	5140	41900	9.7	5.7	5140	41900
	67	26.2	12.6	4260	39700	17.4	10.1	5140	41900	13.0	7.6	5140	41900	8.7	5.1	5140	41900
	74	23.7	11.5	4260	41300	15.8	9.3	5140	41900	11.8	7.0	5140	41900	7.9	4.7	5140	41900
	80	21.9	10.6	4260	42700	14.6	8.5	5140	41900	10.9	6.4	5140	41900	7.3	4.3	5140	41900
	88	19.9	9.7	4260	44400	13.3	7.8	5140	41900	9.9	5.8	5140	41900	6.6	3.9	5140	41900
	93	18.9	9.1	4260	45500	12.6	7.3	5140	41900	9.4	5.5	5140	41900	6.3	3.7	5140	41900
	102	17.2	8.4	4260	47100	11.5	6.7	5140	41900	8.6	5.0	5140	41900	5.7	3.4	5140	41900
	112	15.7	7.6	4260	48900	10.4	6.1	5140	41900	7.8	4.6	5140	41900	5.2	3.1	5140	41900
	123	14.3	7.0	4260	50800	9.5	5.6	5140	41900	7.1	4.2	5140	41900	4.8	2.8	5140	41900
	138	12.7	6.2	4260	53100	8.5	4.9	5140	41900	6.3	3.7	5140	41900	4.2	2.5	5140	41900
	151	11.6	5.7	4260	53100	7.8	4.6	5140	41900	5.8	3.4	5140	41900	3.9	2.3	5140	41900

Selection Tables for Reducers (60Hz Input)

■ **IMPORTANT**: Please refer to page 144 for Reducer Selection Table notes.

Refer to Page 166-187 for 50 Hz Input

Size	n1	1750				1165				870				580			
	Ratio i	n2 [rpm]	P1 [kW]	Tout [Nm]	Pro [N]	n2 [rpm]	P1 [kW]	Tout [Nm]	Pro [N]	n2 [rpm]	P1 [kW]	Tout [Nm]	Pro [N]	n2 [rpm]	P1 [kW]	Tout [Nm]	Pro [N]
4C175 [Dimension Drawings from page 198]	163	10.8	5.2	4260	53100	7.2	4.2	5140	41900	5.4	3.1	5140	41900	3.6	2.1	5140	41900
	179	9.8	4.8	4260	53100	6.6	3.9	5140	41900	4.9	2.9	5140	41900	3.3	1.9	5140	41900
	189	9.3	4.5	4260	53100	6.2	3.6	5140	41900	4.6	2.7	5140	41900	3.1	1.8	5140	41900
	207	8.5	4.1	4260	53100	5.7	3.3	5140	41900	4.2	2.5	5140	41900	2.8	1.7	5140	41900
	227	7.8	3.7	4260	53100	5.2	3.0	5140	41900	3.9	2.2	5140	41900	2.6	1.5	5140	41900
	249	7.1	3.5	4260	53100	4.7	2.8	5140	41900	3.5	2.1	5140	41900	2.4	1.4	5140	41900
	278	6.3	3.0	4260	53100	4.2	2.4	5140	41900	3.2	1.8	5140	41900	2.1	1.2	5140	41900
	305	5.8	2.8	4260	53100	3.9	2.3	5140	41900	2.9	1.7	5140	41900	1.9	1.2	5140	41900
4D160 [Dimension Drawings from page 198]	19	92.2	25.3	2440	47500	61.4	25.3	3670	50700	45.8	21.2	4120	55100	30.6	14.1	4110	63900
	21	83.4	25.3	2670	48200	55.5	25.3	4020	51400	41.5	21.2	4500	55700	27.7	14.1	4500	64700
	22	79.6	20.3	2290	50500	53.0	20.3	3440	54400	39.6	20.3	4600	56600	26.4	16.0	5450	63200
	25	70.0	20.3	2500	51500	46.6	20.3	3760	55200	34.8	20.3	5030	57300	23.2	16.0	5960	63800
	26	67.4	19.7	2540	52100	44.9	19.7	3810	55900	33.5	19.7	5100	58100	22.4	14.0	5440	66500
	28	62.5	19.7	2770	53000	41.7	19.7	4170	56700	31.1	19.7	5580	58600	20.8	14.0	5960	67200
	35	50.0	19.7	3490	55100	33.3	19.7	5240	58100	24.9	15.3	5450	64300	16.6	10.2	5450	74800
	39	44.9	19.7	3820	55900	29.9	19.7	5730	58700	22.4	15.3	5960	65000	14.9	10.2	5960	75900
	42	41.7	19.7	4120	56600	27.8	17.3	5440	61400	20.8	12.9	5430	68600	13.9	8.6	5450	83100
	46	38.1	19.7	4510	57200	25.4	17.3	5960	61900	19.0	12.9	5960	69300	12.7	8.7	5960	79700
	48	36.5	18.7	4520	58300	24.3	15.0	5440	64800	18.2	11.2	5440	72400	12.1	7.5	5450	83100
	53	33.1	18.7	4950	59000	22.0	15.0	5960	65500	16.5	11.2	5960	73200	11.0	7.5	5960	79700
	54	32.5	13.1	3590	64100	21.6	13.1	5390	68200	16.2	9.9	5450	75800	10.8	6.6	5450	83100
	60	29.2	13.1	3910	65100	19.5	13.1	5890	69000	14.5	9.9	5960	76700	9.7	6.6	5960	79700
	67	26.2	12.9	4360	66500	17.4	10.7	5450	73500	13.0	8.1	5450	81800	8.7	5.4	5450	83100
	74	23.7	12.9	4770	67500	15.8	10.7	5960	74400	11.8	8.1	5960	79700	7.9	5.4	5960	79700
	80	21.9	9.9	3970	72100	14.6	9.1	5450	78300	10.9	6.8	5450	83100	7.3	4.5	5450	83100
	88	19.9	9.9	4340	73300	13.3	9.1	5960	79400	9.9	6.8	5960	79700	6.6	4.5	5960	79700
	93	18.9	10.5	4900	73000	12.6	7.8	5450	82800	9.4	5.8	5450	83100	6.3	3.9	5450	83100
	102	17.2	10.5	5360	74000	11.5	7.8	5960	79700	8.6	5.8	5960	79700	5.7	3.9	5960	79700
	112	15.7	9.7	5450	76300	10.4	6.5	5450	83100	7.8	4.9	5450	83100	5.2	3.3	5450	83100
	123	14.3	9.7	5960	77400	9.5	6.5	5960	79700	7.1	4.9	5960	79700	4.8	3.3	5960	79700
	138	12.7	7.5	5160	83300	8.5	5.2	5390	83400	6.3	3.9	5390	83400	4.2	2.6	5390	83400
	151	11.6	7.5	5640	81900	7.8	5.2	5890	80200	5.8	3.9	5890	80200	3.9	2.6	5890	80200
	163	10.8	5.8	4720	87100	7.2	4.4	5450	83100	5.4	3.3	5450	83100	3.6	2.2	5450	83100
	179	9.8	5.8	5170	84700	6.6	4.5	5960	79700	4.9	3.3	5960	79700	3.3	2.2	5960	79700
	189	9.3	4.4	4200	89600	6.2	3.8	5450	83100	4.6	2.9	5450	83100	3.1	1.9	5450	83100
	207	8.5	4.5	4590	87800	5.7	3.9	5960	79700	4.2	2.9	5960	79700	2.8	1.9	5960	79700
	227	7.8	3.5	3970	90600	5.2	3.2	5440	83100	3.9	2.4	5450	83100	2.6	1.6	5450	83100
	249	7.1	3.5	4340	89000	4.7	3.2	5960	79700	3.5	2.4	5960	79700	2.4	1.6	5960	79700
	278	6.3	3.5	4860	86400	4.2	2.6	5450	83100	3.2	1.9	5440	83100	2.1	1.3	5450	83100
	305	5.8	3.5	5320	83900	3.9	2.6	5960	79700	2.9	2.0	5960	79700	1.9	1.3	5960	79700
4D165 [Dimension Drawings from page 198]	19	92.2	30.0	2900	46000	61.4	28.3	4110	49300	45.8	21.2	4120	55100	30.6	14.1	4110	63900
	21	83.4	30.0	3170	46700	55.5	28.3	4500	49800	41.5	21.2	4500	55700	27.7	14.1	4500	64700
	22	79.6	24.1	2710	49200	53.0	24.1	4080	52300	39.6	22.7	5150	54900	26.4	16.5	5610	62600
	25	70.0	24.1	2960	50000	46.6	24.1	4460	53000	34.8	22.7	5640	55400	23.2	16.5	6140	63300
	26	67.4	24.1	3100	50400	44.9	24.1	4660	53200	33.5	20.6	5340	57300	22.4	14.9	5790	65400
	28	62.5	24.1	3390	51100	41.7	24.1	5100	53700	31.1	20.6	5830	57800	20.8	14.9	6340	66000
	35	50.0	24.1	4260	52600	33.3	24.1	6410	54400	24.9	18.3	6520	60900	16.6	12.2	6520	71400
	39	44.9	24.1	4660	53300	29.9	24.1	7010	54700	22.4	18.3	7130	61300	14.9	12.2	7130	70100
	42	41.7	22.6	4730	54600	27.8	20.7	6510	58000	20.8	15.5	6530	65200	13.9	10.3	6500	75500
	46	38.1	22.6	5170	55100	25.4	20.7	7130	58200	19.0	15.5	7130	65600	12.7	10.3	7130	70100
	48	36.5	22.6	5460	55400	24.3	18.0	6530	61400	18.2	13.4	6510	69000	12.1	9.0	6520	75500
	53	33.1	22.6	5970	55700	22.0	18.0	7130	61800	16.5	13.4	7130	69500	11.0	9.0	7130	70100
	54	32.5	18.8	5150	59100	21.6	15.9	6540	64600	16.2	11.8	6500	72400	10.8	7.9	6520	75500
	60	29.2	18.8	5640	59600	19.5	15.9	7130	65000	14.5	11.8	7130	70100	9.7	7.9	7130	70100
	67	26.2	16.1	5430	63100	17.4	12.8	6520	70000	13.0	9.6	6520	75500	8.7	6.4	6520	75500
	74	23.7	16.1	5940	63800	15.8	12.8	7130	70100	11.8	9.6	7130	70100	7.9	6.4	7130	70100
	80	21.9	15.1	6070	65400	14.6	10.8	6520	74900	10.9	8.1	6520	75500	7.3	5.4	6520	75500
	88	19.9	15.1	6630	66000	13.3	10.8	7130	70100	9.9	8.1	7130	70100	6.6	5.4	7130	70100
	93	18.9	11.4	5320	71700	12.6	9.3	6520	75500	9.4	6.9	6520	75500	6.3	4.6	6520	75500
	102	17.2	11.4	5830	72500	11.5	9.3	7130	70100	8.6	7.0	7130	70100	5.7	4.7	7130	70100
	112	15.7	11.4	6430	73200	10.4	7.7	6520	75500	7.8	5.8	6520	75500	5.2	3.9	6520	75500
	123	14.3	11.4	7030	71000	9.5	7.7	7130	70100	7.1	5.8	7130	70100	4.8	3.9	7130	70100
	138	12.7	7.9	5480	82300	8.5	6.3	6520	75500	6.3	4.7	6520	75500	4.2	3.1	6520	75500
	151	11.6	8.0	5990	79500	7.8	6.3	7130	70100	5.8	4.7	7130	70100	3.9	3.2	7130	70100
	163	10.8	7.5	6180	78100	7.2	5.3	6530	75500	5.4	4.0	6520	75500	3.6	2.6	6520	75500
	179	9.8	7.6	6770	73400	6.6	5.3	7130	70100	4.9	4.0	7130	70100	3.3	2.7	7130	70100
	189	9.3	5.8	5460	83000	6.2	4.6	6520	75500	4.6	3.4	6520	75500	3.1	2.3	6530	75500
	207	8.5	5.8	5970	79600	5.7	4.6	7130	70100	4.2	3.5	7130	70100	2.8	2.3	7130	70100
	227	7.8	5.7	6460	76000	5.2	3.8	6530	75500	3.9	2.8	6530	75500	2.6	1.9	6520	75500

Selection Tables for Reducers (60Hz Input)

■**IMPORTANT**: Please refer to page 144 for Reducer Selection Table notes.

Refer to Page 166-187 for 50 Hz Input

Size	n1	1750				1165				870				580			
	Ratio i	n2 [rpm]	P1 [kW]	Tout [Nm]	Pro [N]	n2 [rpm]	P1 [kW]	Tout [Nm]	Pro [N]	n2 [rpm]	P1 [kW]	Tout [Nm]	Pro [N]	n2 [rpm]	P1 [kW]	Tout [Nm]	Pro [N]
4D165	249	7.1	5.7	7070	70800	4.7	3.8	7130	70100	3.5	2.9	7130	70100	2.4	1.9	7130	70100
	278	6.3	3.9	5460	83000	4.2	3.0	6380	76700	3.2	2.3	6370	76700	2.1	1.5	6380	76700
	305	5.8	3.9	5970	79700	3.9	3.1	6970	71700	2.9	2.3	6970	71700	1.9	1.6	6970	71700
4D170 [Dimension Drawings from page 198]	11	159.1	41.5 ※	2190	39100	106.0	41.5	3290	41600	79.1	37.4	3970	44200	52.8	24.9	3970	51600
	13	134.7	41.5 ※	2670	40400	89.7	41.5	4010	42500	67.0	37.4	4850	45000	44.7	24.9	4840	52800
	14	125.0	41.5 ※	2920	41000	83.3	41.5	4390	42800	62.2	37.4	5300	45200	41.5	24.9	5290	53200
	16	109.4	41.5 ※	3340	41700	72.9	41.5	5020	43200	54.4	37.4	6060	45300	36.3	24.9	6050	53600
	18	97.3	41.5 ※	3650	42100	64.8	41.5	5490	43300	48.4	37.4	6620	45300	32.3	24.9	6620	53800
	19	92.2	33.9	3270	44800	61.4	33.9	4920	46800	45.8	29.7	5770	49800	30.6	19.8	5770	58600
	26	67.4	33.9	4370	46300	44.9	33.9	6560	47200	33.5	30.3	7850	49300	22.4	20.2	7850	58900
	42	41.7	27.3	5710	51500	27.8	25.0	7860	53800	20.8	18.6	7830	61000	13.9	12.4	7830	62600
	48	36.5	25.5	6160	53100	24.3	21.7	7870	57200	18.2	16.2	7870	62500	12.1	10.8	7870	62500
	53	33.1	25.5	6740	53300	22.0	21.7	8590	52600	16.5	16.2	8590	52600	11.0	10.8	8590	52600
	54	32.5	19.7	5390	58400	21.6	19.1	7850	60300	16.2	14.3	7870	62500	10.8	9.5	7850	62500
	60	29.2	19.7	5880	58900	19.5	19.1	8590	52600	14.5	14.3	8590	52600	9.7	9.6	8590	52600
	67	26.2	19.5	6590	59400	17.4	15.5	7860	62500	13.0	11.6	7860	62500	8.7	7.7	7860	62500
	74	23.7	19.5	7210	59700	15.8	15.5	8590	52600	11.8	11.6	8590	52600	7.9	7.7	8590	52600
	80	21.9	15.8	6360	64400	14.6	13.0	7860	62500	10.9	9.7	7860	62500	7.3	6.5	7860	62500
	88	19.9	15.8	6960	65000	13.3	13.0	8590	52600	9.9	9.7	8590	52600	6.6	6.5	8590	52600
	93	18.9	14.3	6680	67400	12.6	11.2	7860	62500	9.4	8.4	7860	62500	6.3	5.6	7860	62500
	102	17.2	14.1	7230	68100	11.5	11.2	8590	52600	8.6	8.4	8590	52600	5.7	5.6	8590	52600
	112	15.7	12.0	6760	72100	10.4	9.3	7860	62500	7.8	7.0	7860	62500	5.2	4.7	7860	62500
	123	14.3	11.7	7230	69200	9.5	9.3	8590	52600	7.1	7.0	8590	52600	4.8	4.7	8590	52600
	138	12.7	9.8	6750	73600	8.5	7.6	7860	62500	6.3	5.6	7850	62500	4.2	3.8	7850	62500
	151	11.6	9.6	7230	69200	7.8	7.6	8590	52600	5.8	5.7	8590	52600	3.9	3.8	8590	52600
	163	10.8	8.4	6890	72400	7.2	6.4	7880	62500	5.4	4.8	7860	62500	3.6	3.2	7850	62500
	179	9.8	8.1	7230	69200	6.6	6.4	8590	52600	4.9	4.8	8590	52600	3.3	3.2	8590	52600
	189	9.3	7.2	6790	73200	6.2	5.5	7860	62500	4.6	4.1	7850	62500	3.1	2.7	7850	62500
	207	8.5	7.0	7230	69200	5.7	5.6	8590	52600	4.2	4.2	8590	52600	2.8	2.8	8590	52600
	227	7.8	5.9	6770	73400	5.2	4.6	7860	62500	3.9	3.5	7860	62500	2.6	2.3	7860	62500
	249	7.1	5.8	7230	69200	4.7	4.6	8590	52600	3.5	3.5	8590	52600	2.4	2.3	8590	52600
	278	6.3	4.8	6740	73700	4.2	3.7	7850	62500	3.2	2.8	7860	62500	2.1	1.9	7860	62500
	305	5.8	4.8	7230	69200	3.9	3.8	8590	52600	2.9	2.8	8590	52600	1.9	1.9	8590	52600
4D175 [Dimension Drawings from page 198]	11	159.1	45.0 ※	2380	38500	106.0	45.0	3570	40700	79.1	37.4	3970	44200	52.8	24.9	3970	51600
	13	134.7	45.0 ※	2900	39700	89.7	45.0	4350	41400	67.0	37.4	4850	45000	44.7	24.9	4840	52800
	14	125.0	45.0 ※	3170	40200	83.3	45.0	4760	41700	62.2	37.4	5300	45200	41.5	24.9	5290	53200
	16	109.4	45.0 ※	3620	40800	72.9	45.0	5440	41800	54.4	37.4	6060	45300	36.3	24.9	6050	53600
	18	97.3	45.0 ※	3960	41100	64.8	45.0	5950	41800	48.4	37.4	6620	45300	32.3	24.9	6620	53800
	19	92.2	37.0	3570	43900	61.4	37.0	5370	45400	45.8	29.7	5770	49800	30.6	19.8	5770	58600
	26	67.4	37.0	4770	45100	44.9	37.0	7160	45300	33.5	31.2	8080	48600	22.4	20.8	8080	58200
	42	41.7	30.0	6300	49600	27.8	28.0	8720	50600	20.8	21.0	8720	50600	13.9	14.0	8720	50600
	48	36.5	29.9	7230	49800	24.3	24.0	8720	37700	18.2	17.9	8720	50600	12.1	12.0	8720	50600
	53	33.1	27.4	7230	51800	22.0	22.0	8720	50600	16.5	16.4	8720	50600	11.0	10.9	8720	50600
	54	32.5	24.1	6600	54600	21.6	21.2	5140	39900	16.2	15.8	8720	50600	10.8	10.6	8720	50600
	60	29.2	24.1	7200	54700	19.5	19.4	8720	50600	14.5	14.5	8720	50600	9.7	9.7	8720	50600
	67	26.2	21.4	7230	57400	17.4	17.2	8720	50600	13.0	12.8	8720	50600	8.7	8.6	8720	50600
	74	23.7	19.5	7230	59700	15.8	15.7	8720	50600	11.8	11.7	8720	50600	7.9	7.9	8720	50600
	80	21.9	17.9	7230	61700	14.6	14.4	8720	50600	10.9	10.8	8720	50600	7.3	7.2	8720	50600

Selection Tables for Reducers (60Hz Input)

■ **IMPORTANT**: Please refer to page 144 for Reducer Selection Table notes.

Refer to Page 166-187 for 50 Hz Input

Size	n1	1750				1165				870				580			
	Ratio i	n2 [rpm]	P1 [kW]	Tout [Nm]	Pro [N]	n2 [rpm]	P1 [kW]	Tout [Nm]	Pro [N]	n2 [rpm]	P1 [kW]	Tout [Nm]	Pro [N]	n2 [rpm]	P1 [kW]	Tout [Nm]	Pro [N]
4D175 [Dimension Drawings from page 198]	88	19.9	16.4	7230	64100	13.3	13.2	8720	50600	9.9	9.9	8720	50600	6.6	6.6	8720	50600
	93	18.9	15.5	7230	65700	12.6	12.4	8720	50600	9.4	9.3	8720	50600	6.3	6.2	8720	50600
	102	17.2	14.1	7230	68100	11.5	11.4	8720	50600	8.6	8.5	8720	50600	5.7	5.7	8720	50600
	112	15.7	12.8	7230	69200	10.4	10.3	8720	50600	7.8	7.7	8720	50600	5.2	5.2	8720	50600
	123	14.3	11.7	7230	69200	9.5	9.5	8720	50600	7.1	7.1	8720	50600	4.8	4.7	8720	50600
	138	12.7	10.4	7230	69200	8.5	8.4	8720	50600	6.3	6.3	8720	50600	4.2	4.2	8720	50600
	151	11.6	9.6	7230	69200	7.8	7.7	8720	50600	5.8	5.8	8720	50600	3.9	3.9	8720	50600
	163	10.8	8.8	7230	69200	7.2	7.1	8720	50600	5.4	5.3	8720	50600	3.6	3.5	8720	50600
	179	9.8	8.1	7230	69200	6.6	6.5	8720	50600	4.9	4.9	8720	50600	3.3	3.3	8720	50600
	189	9.3	7.6	7230	69200	6.2	6.1	8720	50600	4.6	4.6	8720	50600	3.1	3.0	8720	50600
	207	8.5	7.0	7230	69200	5.7	5.6	8720	50600	4.2	4.2	8720	50600	2.8	2.8	8720	50600
	227	7.8	6.3	7230	69200	5.2	5.1	8720	50600	3.9	3.8	8720	50600	2.6	2.5	8720	50600
	249	7.1	5.8	7230	69200	4.7	4.7	8720	50600	3.5	3.5	8720	50600	2.4	2.4	8720	50600
	278	6.3	5.2	7230	69200	4.2	4.1	8720	50600	3.2	3.1	8720	50600	2.1	2.1	8720	50600
	305	5.8	4.8	7230	69200	3.9	3.8	8720	50600	2.9	2.9	8720	50600	1.9	1.9	8720	50600
4D180 [Dimension Drawings from page 198]	11	159.1	53.4 ※	2820	37100	106.0	53.4	4240	38600	79.1	49.6	5270	40100	52.8	33.1	5280	47400
	13	134.7	53.4 ※	3440	38000	89.7	53.4	5170	38900	67.0	49.6	6430	39900	44.7	33.1	6430	47700
	14	125.0	53.4 ※	3760	38300	83.3	53.4	5650	38800	62.2	49.6	7030	39700	41.5	33.1	7030	47700
	16	109.4	53.4 ※	4300	38600	72.9	53.4	6460	38600	54.4	49.6	8030	39000	36.3	33.1	8040	47300
	18	97.3	53.4 ※	4700	38800	64.8	53.4	7060	38300	48.4	46.1	8170	40400	32.3	32.8	8720	47200
	19	92.2	41.5 ※	4010	42500	61.4	41.5	6020	43300	45.8	37.4	7270	45100	30.6	24.9	7260	53900
	21	83.4	41.5 ※	4380	42800	55.5	41.5	6590	43200	41.5	37.4	7950	44800	27.7	24.9	7940	53800
	22	79.6	41.5 ※	4680	43000	53.0	41.5	7030	43100	39.6	33.2	7530	47400	26.4	22.1	7520	56700
	25	70.0	41.5 ※	5120	43200	46.6	41.5	7680	42800	34.8	33.2	8230	47200	23.2	22.1	8220	56600
	26	67.4	41.5 ※	5350	43200	44.9	39.5	7640	43800	33.5	29.5	7640	50000	22.4	19.7	7660	59600
	28	62.5	41.5 ※	5850	43300	41.7	39.3	8320	43500	31.1	29.5	8360	49700	20.8	19.7	8370	55900
	35	50.0	41.5 ※	7350	42900	33.3	32.8	8720	47200	24.9	24.5	8720	50600	16.6	16.3	8720	50600
	39	44.9	41.5	8040	42600	29.9	30.0	8720	49200	22.4	22.4	8720	50600	14.9	14.9	8720	50600
	42	41.7	40.4	8460	42800	27.8	27.7	8720	50600	20.8	20.7	8720	50600	13.9	13.8	8720	50600
	46	38.1	37.2	8520	44500	25.4	25.4	8720	50600	19.0	18.9	8720	50600	12.7	12.6	8720	50600
	48	36.5	32.4	7820	47900	24.3	24.0	8720	50600	18.2	17.9	8720	50600	12.1	12.0	8720	50600
	53	33.1	32.4	8560	47600	22.0	22.0	8720	50600	16.5	16.4	8720	50600	11.0	10.9	8720	50600
	54	32.5	30.6	8380	48900	21.6	21.2	8720	50600	16.2	15.8	8720	50600	10.8	10.6	8720	50600
	60	29.2	29.1	8720	49900	19.5	19.4	8720	50600	14.5	14.5	8720	50600	9.7	9.7	8720	50600
	67	26.2	25.8	8720	50600	17.4	17.2	8720	50600	13.0	12.8	8720	50600	8.7	8.6	8720	50600
	74	23.7	23.6	8720	50600	15.8	15.7	8720	50600	11.8	11.7	8720	50600	7.9	7.9	8720	50600
	80	21.9	21.7	8720	50600	14.6	14.4	8720	50600	10.9	10.8	8720	50600	7.3	7.2	8720	50600
	88	19.9	19.8	8720	50600	13.3	13.2	8720	50600	9.9	9.9	8720	50600	6.6	6.6	8720	50600
	93	18.9	18.7	8720	50600	12.6	12.4	8720	50600	9.4	9.3	8720	50600	6.3	6.2	8720	50600
	102	17.2	17.1	8720	50600	11.5	11.4	8720	50600	8.6	8.5	8720	50600	5.7	5.7	8720	50600
	112	15.7	15.5	8720	50600	10.4	10.3	8720	50600	7.8	7.7	8720	50600	5.2	5.2	8720	50600
	123	14.3	14.1	8720	50600	9.5	9.5	8720	50600	7.1	7.1	8720	50600	4.8	4.7	8720	50600
	138	12.7	12.6	8720	50600	8.5	8.4	8720	50600	6.3	6.3	8720	50600	4.2	4.2	8720	50600
	151	11.6	11.5	8720	50600	7.8	7.7	8720	50600	5.8	5.8	8720	50600	3.9	3.9	8720	50600
	163	10.8	10.6	8720	50600	7.2	7.2	8720	50600	5.4	5.3	8720	50600	3.6	3.5	8720	50600
	179	9.8	9.8	8720	50600	6.6	6.5	8720	50600	4.9	4.9	8720	50600	3.3	3.3	8720	50600
	189	9.3	9.2	8720	50600	6.2	6.1	8720	50600	4.6	4.6	8720	50600	3.1	3.0	8720	50600
	207	8.5	8.4	8720	50600	5.7	5.6	8720	50600	4.2	4.2	8720	50600	2.8	2.8	8720	50600
	227	7.8	7.6	8720	50600	5.2	5.0	8720	50600	3.9	3.8	8720	50600	2.6	2.5	8720	50600
	249	7.1	7.0	8720	50600	4.7	4.7	8720	50600	3.5	3.5	8720	50600	2.4	2.4	8720	50600
	278	6.3	6.2	8720	50600	4.2	4.1	8720	50600	3.2	3.1	8720	50600	2.1	2.1	8720	50600
	305	5.8	5.7	8720	50600	3.9	3.8	8720	50600	2.9	2.9	8720	50600	1.9	1.9	8720	50600
4D185 [Dimension Drawings from page 198]	11	159.1	60.0 ※	3170	36000	106.0	60.0	4760	37000	79.1	49.6	5270	40100	52.8	33.1	5280	47400
	13	134.7	60.0 ※	3860	36600	89.7	60.0	5800	36800	67.0	49.6	6430	39900	44.7	33.1	6430	47700
	14	125.0	60.0 ※	4230	36800	83.3	60.0	6350	36600	62.2	49.6	7030	39700	41.5	33.1	7030	47700
	16	109.4	60.0 ※	4830	37000	72.9	60.0	7260	36100	54.4	49.6	8030	39000	36.3	33.1	8040	47300
	18	97.3	60.0 ※	5280	37000	64.8	56.6	7480	37000	48.4	46.1	8170	40400	32.3	32.8	8720	47200
	19	92.2	45.0 ※	4350	41400	61.4	45.0	6530	41700	45.8	38.0	7380	44700	30.6	25.3	7370	53500
	21	83.4	45.0 ※	4750	41600	55.5	45.0	7140	41400	41.5	38.0	8080	44400	27.7	25.3	8070	53400
	22	79.6	45.0 ※	5070	41700	53.0	45.0	7620	41200	39.6	33.7	7640	47100	26.4	22.5	7650	56300
	25	70.0	45.0 ※	5550	41800	46.6	43.2	7990	41800	34.8	33.7	8360	46800	23.2	22.5	8370	56000
	26	67.4	45.0 ※	5800	41800	44.9	40.2	7780	43400	33.5	30.0	7770	49600	22.4	20.0	7770	59200
	28	62.5	45.0 ※	6340	41700	41.7	39.3	8320	43500	31.1	30.0	8500	49300	20.8	20.0	8500	54100
	35	50.0	45.0 ※	7970	40900	33.3	32.8	8720	47200	24.9	24.5	8720	50600	16.6	16.3	8720	50600
	39	44.9	41.8	8100	42400	29.9	30.0	8720	49200	22.4	22.4	8720	50600	14.9	14.9	8720	50600
	42	41.7	40.4	8460	42800	27.8	27.7	8720	50600	20.8	20.7	8720	50600	13.9	13.8	8720	50600
	46	38.1	37.2	8520	44500	25.4	25.4	8720	50600	19.0	18.9	8720	50600	12.7	12.6	8720	50600
	48	36.5	36.1	8720	45000	24.3	24.0	8720	50600	18.2	17.9	8720	50600	12.1	12.0	8720	50600
	53	33.1	33.0	8720	47000	22.0	22.0	8720	50600	16.5	16.4	8720	50600	11.0	10.9	8720	50600
	54	32.5	31.9	8720	47800	21.6	21.2	8720	50600	16.2	15.8	8720	50600	10.8	10.6	8720	50600

Selection Tables for Reducers (60Hz Input)

■**IMPORTANT**: Please refer to page 144 for Reducer Selection Table notes.

Refer to Page 166-187 for 50 Hz Input

Size	n1	1750				1165				870				580			
	Ratio i	n2 [rpm]	P1 [kW]	Tout [Nm]	Pro [N]	n2 [rpm]	P1 [kW]	Tout [Nm]	Pro [N]	n2 [rpm]	P1 [kW]	Tout [Nm]	Pro [N]	n2 [rpm]	P1 [kW]	Tout [Nm]	Pro [N]
4D185 [Dimension Drawings from page 198]	60	29.2	29.1	8720	49900	19.5	19.4	8720	50600	14.5	14.5	8720	50600	9.7	9.7	8720	50600
	67	26.2	25.8	8720	50600	17.4	17.2	8720	50600	13.0	12.8	8720	50600	8.7	8.6	8720	50600
	74	23.7	23.6	8720	50600	15.8	15.7	8720	50600	11.8	11.7	8720	50600	7.9	7.9	8720	50600
	80	21.9	21.7	8720	50600	14.6	14.4	8720	50600	10.9	10.8	8720	50600	7.3	7.2	8720	50600
	88	19.9	19.8	8720	50600	13.3	13.2	8720	50600	9.9	9.9	8720	50600	6.6	6.6	8720	50600
	93	18.9	18.7	8720	50600	12.6	12.4	8720	50600	9.4	9.3	8720	50600	6.3	6.2	8720	50600
	102	17.2	17.1	8720	50600	11.5	11.4	8720	50600	8.6	8.5	8720	50600	5.7	5.7	8720	50600
	112	15.7	15.5	8720	50600	10.4	10.3	8720	50600	7.8	7.7	8720	50600	5.2	5.2	8720	50600
	123	14.3	14.1	8720	50600	9.5	9.5	8720	50600	7.1	7.1	8720	50600	4.8	4.7	8720	50600
	138	12.7	12.6	8720	50600	8.5	8.4	8720	50600	6.3	6.3	8720	50600	4.2	4.2	8720	50600
	151	11.6	11.5	8720	50600	7.8	7.7	8720	50600	5.8	5.8	8720	50600	3.9	3.9	8720	50600
	163	10.8	10.6	8720	50600	7.2	7.1	8720	50600	5.4	5.3	8720	50600	3.6	3.5	8720	50600
	179	9.8	9.8	8720	50600	6.6	6.5	8720	50600	4.9	4.9	8720	50600	3.3	3.3	8720	50600
	189	9.3	9.2	8720	50600	6.2	6.1	8720	50600	4.6	4.6	8720	50600	3.1	3.0	8720	50600
	207	8.5	8.4	8720	50600	5.7	5.6	8720	50600	4.2	4.2	8720	50600	2.8	2.8	8720	50600
	227	7.8	7.6	8720	50600	5.2	5.1	8720	50600	3.9	3.8	8720	50600	2.6	2.5	8720	50600
	249	7.1	7.0	8720	50600	4.7	4.7	8720	50600	3.5	3.5	8720	50600	2.4	2.4	8720	50600
	278	6.3	6.2	8720	50600	4.2	4.14	8720	50600	3.2	3.1	8720	50600	2.1	2.2	8720	50600
	305	5.8	5.7	8720	50600	3.9	3.8	8720	50600	2.9	2.9	8720	50600	1.9	1.9	8720	50600
4E170 [Dimension Drawings from page 198]	11	159.1	41.5 ※	2190	52800	106.0	41.5	3290	57300	79.1	37.4	3970	61500	52.8	24.9	3970	70900
	13	134.7	41.5 ※	2670	55000	89.7	41.5	4010	59300	67.0	37.4	4850	63400	44.7	24.9	4840	73400
	14	125.0	41.5 ※	2920	56000	83.3	41.5	4390	60100	62.2	37.4	5300	64200	41.5	24.9	5290	74500
	16	109.4	41.5 ※	3340	57400	72.9	41.5	5020	61300	54.4	37.4	6060	65300	36.3	24.9	6050	76000
	18	97.3	41.5 ※	3650	58400	64.8	41.5	5490	62000	48.4	37.4	6620	65900	32.3	24.9	6620	76900
	19	92.2	33.9	3270	61400	61.4	33.9	4920	65800	45.8	29.7	5770	70700	30.6	19.8	5770	82000
	26	67.4	33.9	4370	64600	44.9	33.9	6560	68300	33.5	30.3	7850	72600	22.4	20.2	7850	84900
	42	41.7	27.3	5710	72900	27.8	25.0	7860	78300	20.8	18.6	7830	87500	13.9	12.4	7830	90300
	48	36.5	25.5	6160	75500	24.3	21.7	7870	82700	18.2	16.2	7870	90200	12.1	10.8	7870	90200
	53	33.1	25.5	6740	76400	22.0	21.7	8590	83500	16.5	16.2	8590	88700	11.0	10.8	8590	88700
	54	32.5	19.7	5390	81300	21.6	19.1	7850	86700	16.2	14.3	7870	90200	10.8	9.5	7850	90200
	60	29.2	19.7	5880	82500	19.5	19.1	8590	87600	14.5	14.3	8590	88700	9.7	9.6	8590	88700
	67	26.2	19.5	6590	84000	17.4	15.5	7860	90200	13.0	11.6	7860	90200	8.7	7.7	7860	90200
	74	23.7	19.5	7210	85200	15.8	15.5	8590	88700	11.8	11.6	8590	88700	7.9	7.7	8590	88700
	80	21.9	15.8	6360	90200	14.6	13.0	7860	90200	10.9	9.7	7860	90200	7.3	6.5	7860	90200
	88	19.9	15.8	6960	91600	13.3	13.0	8590	88700	9.9	9.7	8590	88700	6.6	6.5	8590	88700
	93	18.9	14.3	6680	92600	12.6	11.2	7860	90200	9.4	8.4	7860	90200	6.3	5.6	7860	90200
	102	17.2	14.3	7300	91300	11.5	11.2	8590	88700	8.6	8.4	8590	88700	5.7	5.6	8590	88700
	112	15.7	12.0	6760	92400	10.4	9.3	7860	90200	7.8	7.0	7860	90200	5.2	4.7	7860	90200
	123	14.3	12.0	7400	91100	9.5	9.3	8590	88700	7.1	7.0	8590	88700	4.8	4.7	8590	88700
	138	12.7	9.8	6750	92400	8.5	7.6	7860	90200	6.3	5.6	7850	90200	4.2	3.8	7850	90200
	151	11.6	9.8	7380	91200	7.8	7.6	8590	88700	5.8	5.7	8590	88700	3.9	3.8	8590	88700
	163	10.8	8.4	6890	92100	7.2	6.4	7860	90200	5.4	4.8	7860	90200	3.6	3.2	7850	90200
	179	9.8	8.4	7540	90900	6.6	6.4	8590	88700	4.9	4.8	8590	88700	3.3	3.2	8590	88700
	189	9.3	7.2	6790	92300	6.2	5.5	7860	90200	4.6	4.1	7850	90200	3.1	2.7	7850	90200
	207	8.5	7.2	7430	91100	5.7	5.6	8590	88700	4.2	4.2	8590	88700	2.8	2.8	8590	88700
	227	7.8	5.9	6770	92400	5.2	4.6	7860	90200	3.9	3.4	7860	90200	2.6	2.3	7860	90200
	249	7.1	6.0	7400	91100	4.7	4.6	8590	88700	3.5	3.5	8590	88700	2.4	2.3	8590	88700
	278	6.3	4.8	6740	92500	4.2	3.7	7850	90200	3.2	2.8	7860	90200	2.1	1.9	7860	90200
	305	5.8	4.9	7370	91200	3.9	3.8	8590	88700	2.9	2.8	8590	88700	1.9	1.9	8590	88700

Selection Tables for Reducers (60Hz Input)

■ **IMPORTANT**: Please refer to page 144 for Reducer Selection Table notes.

Refer to Page 166-187 for 50 Hz Input

Size	n1	1750				1165				870				580			
	Ratio i	n2 [rpm]	P1 [kW]	Tout [Nm]	Pro [N]	n2 [rpm]	P1 [kW]	Tout [Nm]	Pro [N]	n2 [rpm]	P1 [kW]	Tout [Nm]	Pro [N]	n2 [rpm]	P1 [kW]	Tout [Nm]	Pro [N]
4E175 [Dimension Drawings from page 198]	11	159.1	45.0 ※	2380	52300	106.0	45.0	3570	56500	79.1	37.4	3970	61500	52.8	24.9	3970	70900
	13	134.7	45.0 ※	2900	54400	89.7	45.0	4350	58300	67.0	37.4	4850	63400	44.7	24.9	4840	73400
	14	125.0	45.0 ※	3170	55300	83.3	45.0	4760	59100	62.2	37.4	5300	64200	41.5	24.9	5290	74500
	16	109.4	45.0 ※	3620	56600	72.9	45.0	5440	60100	54.4	37.4	6060	65300	36.3	24.9	6050	76000
	18	97.3	45.0 ※	3960	57500	64.8	45.0	5950	60700	48.4	37.4	6620	65900	32.3	24.9	6620	76900
	19	92.2	37.0	3570	60500	61.4	37.0	5370	64500	45.8	29.7	5770	70700	30.6	19.8	5770	82000
	26	67.4	37.0	4770	63500	44.9	37.0	7160	66600	33.5	31.2	8080	71900	22.4	20.8	8080	84200
	42	41.7	30.1	6300	71100	27.8	30.1	9460	73600	20.8	23.2	9770	81900	13.9	15.5	9790	86400
	48	36.5	30.1	7270	72200	24.3	25.4	9210	78700	18.2	20.1	9760	86400	12.1	13.4	9760	86400
	53	33.1	30.1	7960	72800	22.0	24.8	9830	79900	16.5	18.5	9830	86300	11.0	12.3	9830	86300
	54	32.5	24.1	6600	77800	21.6	23.8	9790	81200	16.2	17.8	9800	86300	10.8	11.8	9750	86400
	60	29.2	24.1	7200	78700	19.5	21.9	9830	84000	14.5	16.3	9830	86300	9.7	10.9	9830	86300
	67	26.2	24.1	8130	79600	17.4	19.3	9780	86400	13.0	14.4	9780	86400	8.7	9.6	9780	86400
	74	23.7	22.0	8140	82500	15.8	17.7	9830	86300	11.8	13.2	9830	86300	7.9	8.9	9830	86300
	80	21.9	19.5	7850	85900	14.6	16.2	9780	86400	10.9	12.1	9780	86400	7.3	8.1	9780	86400
	88	19.9	18.5	8140	88200	13.3	14.9	9830	86300	9.9	11.1	9830	86300	6.6	7.4	9830	86300
	93	18.9	17.4	8140	89600	12.6	13.9	9750	86400	9.4	10.4	9770	86400	6.3	6.9	9780	86400
	102	17.2	15.9	8140	89600	11.5	12.8	9830	86300	8.6	9.6	9830	86300	5.7	6.4	9830	86300
	112	15.7	15.1	8490	88900	10.4	11.6	9780	86400	7.8	8.7	9780	86400	5.2	5.8	9780	86400
	123	14.3	15.1	9290	87300	9.5	11.6	10700	84500	7.1	8.7	10700	84500	4.8	5.8	10700	84500
	138	12.7	11.3	7820	90300	8.5	9.4	9790	86400	6.3	7.0	9780	86400	4.2	4.7	9780	86400
	151	11.6	11.3	8560	88800	7.8	9.5	10700	84500	5.8	7.1	10700	84500	3.9	4.7	10700	84500
	163	10.8	11.3	9280	87400	7.2	7.9	9780	86400	5.4	5.9	9780	86400	3.6	4.0	9790	86400
	179	9.8	10.7	9610	86700	6.6	8.0	10700	84500	4.9	6.0	10700	84500	3.3	4.0	10700	84500
	189	9.3	8.3	7880	90200	6.2	6.9	9790	86400	4.6	5.1	9780	86400	3.1	3.4	9770	86400
	207	8.5	8.3	8610	88700	5.7	6.9	10700	84500	4.2	5.2	10700	84500	2.8	3.5	10700	84500
	227	7.8	7.2	8170	89600	5.2	5.7	9790	86400	3.9	4.3	9770	86400	2.6	2.8	9800	86300
	249	7.1	7.2	8940	88100	4.7	5.7	10700	84500	3.5	4.3	10700	84500	2.4	2.9	10700	84500
	278	6.3	5.6	7870	90200	4.2	4.7	9780	86400	3.2	3.5	9780	86400	2.1	2.3	9760	86400
	305	5.8	5.7	8610	88700	3.9	4.7	10700	84500	2.9	3.5	10700	84500	1.9	2.4	10700	84500
4E180 [Dimension Drawings from page 198]	11	159.1	53.4 ※	2820	51000	106.0	53.4	4240	54600	79.1	49.6	5270	57700	52.8	33.1	5280	67100
	13	134.7	53.4 ※	3440	52800	89.7	53.4	5170	56000	67.0	49.6	6430	58800	44.7	33.1	6430	68800
	14	125.0	53.4 ※	3760	53600	83.3	53.4	5650	56500	62.2	49.6	7030	59200	41.5	33.1	7030	69500
	16	109.4	53.4 ※	4300	54700	72.9	53.4	6460	57100	54.4	49.6	8030	59500	36.3	33.1	8040	70200
	18	97.3	53.4 ※	4700	55300	64.8	53.4	7060	57500	48.4	49.6	8780	59600	32.3	33.1	8790	70600
	19	92.2	41.5 ※	4010	59300	61.4	41.5	6020	62700	45.8	37.4	7270	66400	30.6	24.9	7260	77700
	21	83.4	41.5 ※	4380	60100	55.5	41.5	6590	63200	41.5	37.4	7950	66800	27.7	24.9	7940	78400
	22	79.6	41.5 ※	4680	60700	53.0	41.5	7030	63500	39.6	33.2	7530	69800	26.4	22.1	7520	81600
	25	70.0	41.5 ※	5120	61500	46.6	41.5	7680	63900	34.8	33.2	8230	70200	23.2	22.1	8220	82400
	26	67.4	41.5 ※	5350	61800	44.9	39.5	7640	65200	33.5	29.5	7640	73200	22.4	19.7	7660	85500
	28	62.5	41.5 ※	5850	62500	41.7	39.5	8360	65500	31.1	29.5	8360	73700	20.8	19.7	8370	86400
	35	50.0	41.5 ※	7350	63700	33.3	41.5	11000	64100	24.9	32.6	11600	71300	16.6	21.7	11600	82000
	39	44.9	41.5	8040	64100	29.9	39.9	11600	65200	22.4	29.8	11600	74200	14.9	19.8	11600	82000
	42	41.7	41.5	8690	64300	27.8	36.9	11600	67400	20.8	27.6	11600	76700	13.9	18.4	11600	82000
	46	38.1	41.5	9500	64400	25.4	33.7	11600	70200	19.0	25.2	11600	79700	12.7	16.8	11600	82000
	48	36.5	32.4	7820	70700	24.3	32.0	11600	71900	18.2	23.9	11600	81500	12.1	15.9	11600	82000
	53	33.1	32.4	8560	71100	22.0	29.2	11600	74800	16.5	21.8	11600	82000	11.0	14.6	11600	82000
	54	32.5	30.6	8380	72700	21.6	28.2	11600	75900	16.2	21.1	11600	82000	10.8	14.0	11600	82000
	60	29.2	30.6	9160	73100	19.5	25.8	11600	78900	14.5	19.3	11600	82000	9.7	12.8	11600	82000
	67	26.2	30.0	10100	73900	17.4	22.8	11600	82000	13.0	17.1	11600	82000	8.7	11.4	11600	82000
	74	23.7	30.0	11100	74000	15.8	20.9	11600	82000	11.8	15.6	11600	82000	7.9	10.4	11600	82000
	80	21.9	24.1	9700	80800	14.6	19.2	11600	82000	10.9	14.3	11600	82000	7.3	9.6	11600	82000
	88	19.9	24.1	10600	81100	13.3	17.5	11600	82000	9.9	13.1	11600	82000	6.6	8.8	11600	82000
	93	18.9	19.5	9100	87400	12.6	16.5	11600	82000	9.4	12.4	11600	82000	6.3	8.2	11600	82000
	102	17.2	19.5	9960	86000	11.5	15.1	11600	82000	8.6	11.3	11600	82000	5.7	7.6	11600	82000
	112	15.7	18.8	10600	84800	10.4	13.7	11600	82000	7.8	10.2	11600	82000	5.2	6.9	11600	82000
	123	14.3	18.8	11600	82100	9.5	12.5	11600	82000	7.1	9.4	11600	82000	4.8	6.3	11600	82000
	138	12.7	15.1	10500	85000	8.5	11.2	11600	82000	6.3	8.3	11600	82000	4.2	5.5	11600	82000
	151	11.6	15.1	11400	83100	7.8	10.2	11600	82000	5.8	7.7	11600	82000	3.9	5.1	11600	82000
	163	10.8	12.0	9850	86200	7.2	9.4	11600	82000	5.4	7.0	11600	82000	3.6	4.7	11600	82000
	179	9.8	12.0	10800	84400	6.6	8.6	11600	82000	4.9	6.5	11600	82000	3.3	4.3	11600	82000

Selection Tables for Reducers (60Hz Input)

■**IMPORTANT**: Please refer to page 144 for Reducer Selection Table notes.

Refer to Page 166-187 for 50 Hz Input

Size	n1	1750				1165				870				580			
	Ratio i	n2 [rpm]	P1 [kW]	Tout [Nm]	Pro [N]	n2 [rpm]	P1 [kW]	Tout [Nm]	Pro [N]	n2 [rpm]	P1 [kW]	Tout [Nm]	Pro [N]	n2 [rpm]	P1 [kW]	Tout [Nm]	Pro [N]
4E180 [Dimension Drawings from page 198]	189	9.3	9.8	9260	87400	6.2	8.1	11600	82000	4.6	6.1	11600	82000	3.1	4.1	11600	82000
	207	8.5	9.8	10100	85700	5.7	7.5	11600	82000	4.2	5.6	11600	82000	2.8	3.7	11600	82000
	227	7.8	8.8	10100	85800	5.2	6.8	11600	82000	3.9	5.0	11600	82000	2.6	3.4	11600	82000
	249	7.1	8.8	11000	83900	4.7	6.2	11600	82000	3.5	4.7	11600	82000	2.4	3.1	11600	82000
	278	6.3	7.2	10000	85900	4.2	5.5	11600	82000	3.2	4.1	11600	82000	2.1	2.7	11600	82000
	305	5.8	7.2	11000	84000	3.9	5.1	11600	82000	2.9	3.8	11600	82000	1.9	2.6	11600	82000
4E185 [Dimension Drawings from page 198]	11	159.1	60.0 ※	3170	50000	106.0	60.0	4760	53100	79.1	49.6	5270	57700	52.8	33.1	5280	67100
	13	134.7	60.0 ※	3860	51600	89.7	60.0	5800	54100	67.0	49.6	6430	58800	44.7	33.1	6430	68800
	14	125.0	60.0 ※	4230	52300	83.3	60.0	6350	54500	62.2	49.6	7030	59200	41.5	33.1	7030	69500
	16	109.4	60.0 ※	4830	53100	72.9	60.0	7260	54800	54.4	49.6	8030	59500	36.3	33.1	8040	70200
	18	97.3	60.0 ※	5280	53700	64.8	60.0	7940	55000	48.4	49.6	8780	59600	32.3	33.1	8790	70600
	19	92.2	45.0 ※	4350	58300	61.4	45.0	6530	61200	45.8	38.0	7380	66100	30.6	25.3	7370	77400
	21	83.4	45.0 ※	4750	59100	55.5	45.0	7140	61600	41.5	38.0	8080	66500	27.7	25.3	8070	78100
	22	79.6	45.0 ※	5070	59600	53.0	45.0	7620	61800	39.6	33.7	7640	69400	26.4	22.5	7650	81300
	25	70.0	45.0 ※	5550	60200	46.6	45.0	8330	62100	34.8	33.7	8360	69900	23.2	22.5	8370	82000
	26	67.4	45.0 ※	5800	60500	44.9	40.2	7780	64800	33.5	30.0	7770	72800	22.4	20.0	7770	85100
	28	62.5	45.0 ※	6340	61000	41.7	40.2	8510	65100	31.1	30.0	8500	73300	20.8	20.0	8500	86000
	35	50.0	45.0 ※	7970	62000	33.3	43.6	11600	62500	24.9	32.6	11600	71300	16.6	21.7	11600	82000
	39	44.9	45.0	8720	62100	29.9	39.9	11600	65200	22.4	29.8	11600	74200	14.9	19.8	11600	82000
	42	41.7	45.0	9420	62100	27.8	37.0	11600	67400	20.8	28.0	11600	76700	13.9	18.0	11600	82000
	46	38.1	45.0	10300	62000	25.4	33.7	11600	70200	19.0	25.2	11600	79700	12.7	16.8	11600	82000
	48	36.5	39.0	9420	66100	24.3	32.0	11600	71900	18.2	23.9	11600	81500	12.1	15.9	11600	82000
	53	33.1	39.0	10300	66100	22.0	29.2	11600	74800	16.5	21.8	11600	82000	11.0	14.6	11600	82000
	54	32.5	39.0	10700	66000	21.6	28.2	11600	75900	16.2	21.1	11600	82000	10.8	14.0	11600	82000
	60	29.2	38.7	11600	66000	19.5	25.8	11600	78900	14.5	19.3	11600	82000	9.7	12.8	11600	82000
	67	26.2	34.3	11600	69700	17.4	22.8	11600	82000	13.0	17.1	11600	82000	8.7	11.4	11600	82000
	74	23.7	31.4	11600	72500	15.8	20.9	11600	82000	11.8	15.6	11600	82000	7.9	10.4	11600	82000
	80	21.9	28.8	11600	75200	14.6	19.2	11600	82000	10.9	14.3	11600	82000	7.3	9.6	11600	82000
	88	19.9	26.3	11600	78200	13.3	17.5	11600	82000	9.9	13.1	11600	82000	6.6	8.8	11600	82000
	93	18.9	24.1	11300	81200	12.6	16.5	11600	82000	9.4	12.4	11600	82000	6.3	8.2	11600	82000
	102	17.2	22.7	11600	82000	11.5	15.1	11600	82000	8.6	11.3	11600	82000	5.7	7.6	11600	82000
	112	15.7	20.6	11600	82000	10.4	13.7	11600	82000	7.8	10.2	11600	82000	5.2	6.9	11600	82000
	123	14.3	18.8	11600	82000	9.5	12.5	11600	82000	7.1	9.4	11600	82000	4.8	6.3	11600	82000
	138	12.7	16.8	11600	82000	8.5	11.2	11600	82000	6.3	8.3	11600	82000	4.2	5.5	11600	82000
	151	11.6	15.3	11600	82000	7.8	10.2	11600	82000	5.8	7.7	11600	82000	3.9	5.1	11600	82000
	163	10.8	14.1	11600	82000	7.2	9.4	11600	82000	5.4	7.0	11600	82000	3.6	4.7	11600	82000
	179	9.8	12.9	11600	82000	6.6	8.6	11600	82000	4.9	6.5	11600	82000	3.3	4.3	11600	82000
	189	9.3	12.0	11400	83100	6.2	8.1	11600	82000	4.6	6.1	11600	82000	3.1	4.1	11600	82000
	207	8.5	11.2	11600	82000	5.7	7.5	11600	82000	4.2	5.6	11600	82000	2.8	3.7	11600	82000
	227	7.8	9.8	11200	83600	5.2	6.8	11600	82000	3.9	5.0	11600	82000	2.6	3.4	11600	82000
	249	7.1	9.3	11600	82000	4.7	6.2	11600	82000	3.5	4.7	11600	82000	2.4	3.1	11600	82000
	278	6.3	8.3	11600	82000	4.2	5.5	11600	82000	3.2	4.1	11600	82000	2.1	2.7	11600	82000
	305	5.8	7.6	11600	82000	3.9	5.1	11600	82000	2.9	3.8	11600	82000	1.9	2.6	11600	82000
4E190 [Dimension Drawings from page 198]	11	159.1	68.4 ※	3610	48700	106.0	68.4	5430	51100	79.1	68.4	7270	51900	52.8	54.4	8670	57300
	13	134.7	68.4 ※	4410	50000	89.7	68.4	6620	51800	67.0	68.4	8860	51800	44.7	54.4	10600	56900
	14	125.0	68.4 ※	4820	50500	83.3	68.4	7240	51900	62.2	68.4	9690	51500	41.5	51.9	11000	57900
	16	109.4	68.4 ※	5510	51200	72.9	68.4	8270	51900	54.4	66.3	10700	51700	36.3	47.8	11600	59900
	18	97.3	68.4 ※	6020	51500	64.8	68.4	9050	51700	48.4	61.1	10800	53800	32.3	43.7	11600	62500
	19	92.2	50.6 ※	4890	56700	61.4	50.6	7340	58800	45.8	46.7	9070	61200	30.6	31.1	9070	72500
	21	83.4	50.6 ※	5350	57400	55.5	50.6	8030	59100	41.5	46.7	9930	61100	27.7	31.1	9910	72700
	22	79.6	50.6 ※	5700	57700	53.0	50.6	8570	59100	39.6	41.3	9360	64500	26.4	27.5	9350	76300
	25	70.0	50.6 ※	6240	58200	46.6	50.6	9370	59100	34.8	41.3	10200	64500	23.2	27.5	10200	76700
	26	67.4	50.6 ※	6520	58400	44.9	49.1	9500	59800	33.5	36.7	9510	67800	22.4	24.4	9480	80100
	28	62.5	50.6 ※	7130	58800	41.7	49.1	10400	59700	31.1	36.7	10400	67900	20.8	24.4	10400	80500
	35	50.0	50.6 ※	8960	59100	33.3	43.6	11600	62500	24.9	32.6	11600	71300	16.6	21.7	11600	82000
	39	44.9	50.6	9800	59000	29.9	39.9	11600	65200	22.4	29.8	11600	74200	14.9	19.8	11600	82000
	42	41.7	50.6	10600	58700	27.8	36.9	11600	67400	20.8	27.6	11600	76700	13.9	18.4	11600	82000
	46	38.1	48.9	11200	59500	25.4	33.7	11600	70200	19.0	25.2	11600	79700	12.7	16.8	11600	82000
	48	36.5	47.9	11600	59800	24.3	32.0	11600	71900	18.2	23.9	11600	81500	12.1	15.9	11600	82000
	53	33.1	43.9	11600	62300	22.0	29.2	11600	74800	16.5	21.8	11600	82000	11.0	14.6	11600	82000
	54	32.5	42.4	11600	63300	21.6	28.2	11600	75900	16.2	21.1	11600	82000	10.8	14.0	11600	82000
	60	29.2	38.7	11600	66000	19.5	25.8	11600	78900	14.5	19.3	11600	82000	9.7	12.8	11600	82000

Selection Tables for Reducers (60Hz Input)

■**IMPORTANT**: Please refer to page 144 for Reducer Selection Table notes.

Refer to Page 166-187 for 50 Hz Input

Size	n1	1750				1165				870				580			
	Ratio i	n2 [rpm]	P1 [kW]	Tout [Nm]	Pro [N]	n2 [rpm]	P1 [kW]	Tout [Nm]	Pro [N]	n2 [rpm]	P1 [kW]	Tout [Nm]	Pro [N]	n2 [rpm]	P1 [kW]	Tout [Nm]	Pro [N]
4E190 [Dimension Drawings from page 198]	67	26.2	34.3	11600	69700	17.4	22.8	11600	82000	13.0	17.1	11600	82000	8.7	11.4	11600	82000
	74	23.7	31.4	11600	72500	15.8	20.9	11600	82000	11.8	15.6	11600	82000	7.9	10.4	11600	82000
	80	21.9	28.8	11600	75200	14.6	19.2	11600	82000	10.9	14.3	11600	82000	7.3	9.6	11600	82000
	88	19.9	26.3	11600	78200	13.3	17.5	11600	82000	9.9	13.1	11600	82000	6.6	8.8	11600	82000
	93	18.9	24.8	11600	80200	12.6	16.5	11600	82000	9.4	12.4	11600	82000	6.3	8.2	11600	82000
	102	17.2	22.7	11600	82000	11.5	15.1	11600	82000	8.6	11.3	11600	82000	5.7	7.6	11600	82000
	112	15.7	20.6	11600	82000	10.4	13.7	11600	82000	7.8	10.2	11600	82000	5.2	6.9	11600	82000
	123	14.3	18.8	11600	82000	9.5	12.5	11600	82000	7.1	9.4	11600	82000	4.8	6.3	11600	82000
	138	12.7	16.8	11600	82000	8.5	11.2	11600	82000	6.3	8.3	11600	82000	4.2	5.6	11600	82000
	151	11.6	15.3	11600	82000	7.8	10.2	11600	82000	5.8	7.7	11600	82000	3.9	5.1	11600	82000
	163	10.8	14.1	11600	82000	7.2	9.4	11600	82000	5.4	7.0	11600	82000	3.6	4.7	11600	82000
	179	9.8	12.9	11600	82000	6.6	8.6	11600	82000	4.9	6.5	11600	82000	3.3	4.3	11600	82000
	189	9.3	12.2	11600	82000	6.2	8.1	11600	82000	4.6	6.1	11600	82000	3.1	4.1	11600	82000
	207	8.5	11.2	11600	82000	5.7	7.5	11600	82000	4.2	5.6	11600	82000	2.8	3.7	11600	82000
	227	7.8	10.1	11600	82000	5.2	6.8	11600	82000	3.9	5.0	11600	82000	2.6	3.4	11600	82000
	249	7.1	9.3	11600	82000	4.7	6.2	11600	82000	3.5	4.7	11600	82000	2.4	3.1	11600	82000
	278	6.3	8.3	11600	82000	4.2	5.5	11600	82000	3.2	4.1	11600	82000	2.1	2.7	11600	82000
	305	5.8	7.6	11600	82000	3.9	5.1	11600	82000	2.9	3.8	11600	82000	1.9	2.6	11600	82000
4E195 [Dimension Drawings from page 198]	11	159.1	75.0 ※	3960	47700	106.0	75.0	5950	49600	79.1	74.5	7920	50000	52.8	54.4	8670	57300
	13	134.7	75.0 ※	4830	48800	89.7	75.0	7260	49900	67.0	74.8	9690	49400	44.7	54.4	10600	56900
	14	125.0	75.0 ※	5280	49200	83.3	75.0	7940	49900	62.2	68.9	9770	51300	41.5	51.9	11000	57900
	16	109.4	75.0 ※	6040	49600	72.9	75.0	9070	49600	54.4	66.3	10700	51700	36.3	47.8	11600	59900
	18	97.3	75.0 ※	6600	49900	64.8	74.9	9910	49200	48.4	61.1	10800	53800	32.3	43.7	11600	62500
	19	92.2	55.0 ※	5310	55500	61.4	55.0	7980	57000	45.8	47.6	9250	60600	30.6	31.8	9270	71900
	21	83.4	55.0 ※	5810	56000	55.5	55.0	8730	57000	41.5	47.6	10100	60500	27.7	31.8	10100	72200
	22	79.6	55.0 ※	6200	56300	53.0	55.0	9310	56900	39.6	42.1	9540	64000	26.4	28.0	9520	75800
	25	70.0	55.0 ※	6780	56700	46.6	55.0	10200	56700	34.8	42.1	10400	63900	23.2	28.0	10400	76100
	26	67.4	55.0 ※	7080	56800	44.9	50.1	9690	59300	33.5	37.4	9690	67300	22.4	24.9	9680	79600
	28	62.5	55.0 ※	7750	57000	41.7	50.1	10600	59100	31.1	37.4	10600	67300	20.8	24.9	10600	79900
	35	50.0	55.0 ※	9740	56800	33.3	43.6	11600	62500	24.9	32.6	11600	71300	16.6	21.7	11600	82000
	39	44.9	54.9	10600	56600	29.9	39.9	11600	65200	22.4	29.8	11600	74200	14.9	19.8	11600	82000
	42	41.7	53.0	11100	57300	27.8	36.9	11600	67400	20.8	27.6	11600	76700	13.9	18.4	11600	82000
	46	38.1	48.9	11200	59500	25.4	33.7	11600	70200	19.0	25.2	11600	79700	12.7	16.8	11600	82000
	48	36.5	47.9	11600	59800	24.3	32.0	11600	71900	18.2	23.9	11600	81500	12.1	15.9	11600	82000
	53	33.1	43.9	11600	62300	22.0	29.2	11600	74800	16.5	21.8	11600	82000	11.0	14.6	11600	82000
	54	32.5	42.4	11600	63300	21.6	28.2	11600	75900	16.2	21.1	11600	82000	10.8	14.0	11600	82000
	60	29.2	38.7	11600	66000	19.5	25.8	11600	78900	14.5	19.3	11600	82000	9.7	12.8	11600	82000
	67	26.2	34.3	11600	69700	17.4	22.8	11600	82000	13.0	17.1	11600	82000	8.7	11.4	11600	82000
	74	23.7	31.4	11600	72500	15.8	20.9	11600	82000	11.8	15.6	11600	82000	7.9	10.4	11600	82000
	80	21.9	28.8	11600	75200	14.6	19.2	11600	82000	10.9	14.3	11600	82000	7.3	9.6	11600	82000
	88	19.9	26.3	11600	78200	13.3	17.5	11600	82000	9.9	13.1	11600	82000	6.6	8.8	11600	82000
	93	18.9	24.8	11600	80200	12.6	16.5	11600	82000	9.4	12.4	11600	82000	6.3	8.2	11600	82000
	102	17.2	22.7	11600	82000	11.5	15.1	11600	82000	8.6	11.3	11600	82000	5.7	7.6	11600	82000
	112	15.7	20.6	11600	82000	10.4	13.7	11600	82000	7.8	10.2	11600	82000	5.2	6.9	11600	82000
	123	14.3	18.8	11600	82000	9.5	12.5	11600	82000	7.1	9.4	11600	82000	4.8	6.3	11600	82000
	138	12.7	16.8	11600	82000	8.5	11.2	11600	82000	6.3	8.3	11600	82000	4.2	5.6	11600	82000
	151	11.6	15.3	11600	82000	7.8	10.2	11600	82000	5.8	7.7	11600	82000	3.9	5.1	11600	82000
	163	10.8	14.1	11600	82000	7.2	9.4	11600	82000	5.4	7.0	11600	82000	3.6	4.7	11600	82000
	179	9.8	12.9	11600	82000	6.6	8.6	11600	82000	4.9	6.5	11600	82000	3.3	4.3	11600	82000
	189	9.3	12.2	11600	82000	6.2	8.1	11600	82000	4.6	6.1	11600	82000	3.1	4.1	11600	82000
	207	8.5	11.2	11600	82000	5.7	7.5	11600	82000	4.2	5.6	11600	82000	2.8	3.7	11600	82000
	227	7.8	10.1	11600	82000	5.2	6.8	11600	82000	3.9	5.0	11600	82000	2.6	3.4	11600	82000
	249	7.1	9.3	11600	82000	4.7	6.2	11600	82000	3.5	4.7	11600	82000	2.4	3.1	11600	82000
	278	6.3	8.3	11600	82000	4.2	5.5	11600	82000	3.2	4.1	11600	82000	2.1	2.7	11600	82000
	305	5.8	7.6	11600	82000	3.9	5.1	11600	82000	2.9	3.8	11600	82000	1.9	2.6	11600	82000
4F180 [Dimension Drawings from page 198]	11	159.1	53.4 ※	2820	90500	106.0	53.4	4240	99500	79.1	49.6	5270	107000	52.8	33.1	5280	123000
	13	134.7	53.4 ※	3440	94800	89.7	53.4	5170	104000	67.0	49.6	6430	111000	44.7	33.1	6430	128000
	14	125.0	53.4 ※	3760	96900	83.3	53.4	5650	106000	62.2	49.6	7030	113000	41.5	33.1	7030	130000
	16	109.4	53.4 ※	4300	99700	72.9	53.4	6460	109000	54.4	49.6	8030	116000	36.3	33.1	8040	129000
	18	97.3	53.4 ※	4700	102000	64.8	53.4	7060	111000	48.4	49.6	8780	118000	32.3	33.1	8790	128000
	19	92.2	41.5 ※	4010	107000	61.4	41.5	6020	117000	45.8	37.4	7270	126000	30.6	24.9	7260	131000
	21	83.4	41.5 ※	4380	109000	55.5	41.5	6590	119000	41.5	37.4	7950	128000	27.7	24.9	7940	130000

Selection Tables for Reducers (60Hz Input)

■ **IMPORTANT**: Please refer to page 144 for Reducer Selection Table notes.

Refer to Page 166-187 for 50 Hz Input

Size	n1	1750				1165				870				580			
	Ratio i	n2 [rpm]	P1 [kW]	Tout [Nm]	Pro [N]	n2 [rpm]	P1 [kW]	Tout [Nm]	Pro [N]	n2 [rpm]	P1 [kW]	Tout [Nm]	Pro [N]	n2 [rpm]	P1 [kW]	Tout [Nm]	Pro [N]
4F180 [Dimension Drawings from page 198]	22	79.6	41.5 ※	4680	111000	53.0	41.5	7030	120000	39.6	33.2	7530	130000	26.4	22.1	7520	130000
	25	70.0	41.5 ※	5120	113000	46.6	41.5	7680	123000	34.8	33.2	8230	129000	23.2	22.1	8220	129000
	26	67.4	41.5 ※	5350	114000	44.9	39.5	7640	124000	33.5	29.5	7640	130000	22.4	19.7	7660	130000
	28	62.5	41.5 ※	5850	116000	41.7	39.5	8360	127000	31.1	29.5	8360	129000	20.8	19.7	8370	129000
	35	50.0	41.5 ※	7350	121000	33.3	41.5	11000	124000	24.9	35.4	12600	122000	16.6	23.6	12600	122000
	39	44.9	41.5	8040	124000	29.9	41.5	12100	123000	22.4	35.4	13800	120000	14.9	23.6	13800	120000
	42	41.7	41.5	8690	125000	27.8	40.1	12600	122000	20.8	29.9	12600	122000	13.9	20.0	12600	122000
	46	38.1	41.5	9500	127000	25.4	40.1	13800	120000	19.0	29.9	13800	120000	12.7	20.0	13800	120000
	48	36.5	32.4	7820	130000	24.3	32.4	11800	123000	18.2	26.0	12600	122000	12.1	17.3	12600	122000
	53	33.1	32.4	8560	129000	22.0	32.4	12900	121000	16.5	26.0	13800	120000	11.0	17.3	13800	120000
	54	32.5	30.6	8380	129000	21.6	30.6	12600	122000	16.2	22.9	12600	122000	10.8	15.3	12600	122000
	60	29.2	30.6	9160	128000	19.5	30.6	13800	120000	14.5	22.9	13800	120000	9.7	15.3	13800	120000
	67	26.2	30.0	10100	126000	17.4	24.8	12600	122000	13.0	18.5	12600	122000	8.7	12.3	12500	122000
	74	23.7	30.0	11100	124000	15.8	24.8	13800	120000	11.8	18.5	13800	120000	7.9	12.3	13700	120000
	80	21.9	24.1	9700	127000	14.6	20.8	12600	122000	10.9	15.5	12500	122000	7.3	10.4	12600	122000
	88	19.9	24.1	10600	125000	13.3	20.8	13800	120000	9.9	15.5	13700	120000	6.6	10.4	13800	120000
	93	18.9	19.5	9100	128000	12.6	17.9	12600	122000	9.4	13.4	12600	122000	6.3	8.9	12600	122000
	102	17.2	19.5	9960	126000	11.5	17.9	13700	120000	8.6	13.4	13800	120000	5.7	9.0	13800	120000
	112	15.7	18.8	10600	125000	10.4	14.9	12600	122000	7.8	11.1	12600	122000	5.2	7.4	12600	122000
	123	14.3	18.8	11600	123000	9.5	14.9	13800	120000	7.1	11.1	13800	120000	4.8	7.4	13800	120000
	138	12.7	15.1	10500	125000	8.5	12.1	12600	122000	6.3	9.1	12600	122000	4.2	6.0	12600	122000
	151	11.6	15.1	11400	124000	7.8	12.1	13800	120000	5.8	9.1	13800	120000	3.9	6.1	13800	120000
	163	10.8	12.0	9850	126000	7.2	10.2	12600	122000	5.4	7.6	12600	122000	3.6	5.1	12600	122000
	179	9.8	12.0	10800	125000	6.6	10.2	13800	120000	4.9	7.7	13800	120000	3.3	5.1	13800	120000
	189	9.3	9.8	9260	127000	6.2	8.8	12600	122000	4.6	6.6	12600	122000	3.1	4.4	12600	122000
	207	8.5	9.8	10100	126000	5.7	8.9	13800	120000	4.2	6.6	13800	120000	2.8	4.4	13800	120000
	227	7.8	8.8	10100	126000	5.2	7.3	12600	122000	3.9	5.5	12600	122000	2.6	3.7	12600	122000
	249	7.1	8.8	11000	124000	4.7	7.4	13800	120000	3.5	5.5	13800	120000	2.4	3.7	13800	120000
	278	6.3	7.2	10000	126000	4.2	6.0	12600	122000	3.2	4.5	12600	122000	2.1	3.0	12600	122000
	305	5.8	7.2	11000	124000	3.9	6.0	13800	120000	2.9	4.5	13800	120000	1.9	3.0	13800	120000
4F185 [Dimension Drawings from page 198]	11	159.1	60.0 ※	3170	89600	106.0	60.0	4760	98200	79.1	49.6	5270	107000	52.8	33.1	5280	123000
	13	134.7	60.0 ※	3860	93700	89.7	60.0	5800	102000	67.0	49.6	6430	111000	44.7	33.1	6430	128000
	14	125.0	60.0 ※	4230	95700	83.3	60.0	6350	104000	62.2	49.6	7030	113000	41.5	33.1	7030	130000
	16	109.4	60.0 ※	4830	98300	72.9	60.0	7260	106000	54.4	49.6	8030	116000	36.3	33.1	8040	129000
	18	97.3	60.0 ※	5280	100000	64.8	60.0	7940	108000	48.4	49.6	8780	118000	32.3	33.1	8790	128000
	19	92.2	45.0 ※	4350	106000	61.4	45.0	6530	115000	45.8	38.0	7380	125000	30.6	25.3	7370	131000
	21	83.4	45.0 ※	4750	108000	55.5	45.0	7140	118000	41.5	38.0	8080	128000	27.7	25.3	8070	129000
	22	79.6	45.0 ※	5070	109000	53.0	45.0	7620	119000	39.6	33.7	7640	130000	26.4	22.5	7650	130000
	25	70.0	45.0 ※	5550	112000	46.6	45.0	8330	121000	34.8	33.7	8360	129000	23.2	22.5	8370	129000
	26	67.4	45.0 ※	5800	113000	44.9	40.2	7780	124000	33.5	30.0	7770	130000	22.4	20.0	7770	130000
	28	62.5	45.0 ※	6340	115000	41.7	40.2	8510	126000	31.1	30.0	8500	129000	20.8	20.0	8500	129000
	35	50.0	45.0 ※	7970	120000	33.3	45.0	12000	123000	24.9	40.4	14400	119000	16.6	27.9	14900	118000
	39	44.9	45.0	8720	122000	29.9	45.0	13100	121000	22.4	40.4	15700	116000	14.9	27.9	16300	115000
	42	41.7	45.0	9420	123000	27.8	45.0	14100	119000	20.8	36.0	15200	117000	13.9	24.0	15200	117000
	46	38.1	45.0	10300	125000	25.4	45.0	15500	117000	19.0	36.2	16700	115000	12.7	24.1	16600	115000
	48	36.5	39.0	9420	127000	24.3	34.0	12300	122000	18.2	27.2	13200	121000	12.1	19.9	14500	118000
	53	33.1	39.0	10300	126000	22.0	34.0	13500	120000	16.5	27.2	14500	118000	11.0	19.9	15900	116000
	54	32.5	39.0	10700	125000	21.6	32.3	13300	120000	16.2	25.8	14200	119000	10.8	18.8	15500	117000
	60	29.2	39.0	11700	123000	19.5	32.3	14500	118000	14.5	25.8	15500	117000	9.7	18.8	17000	114000
	67	26.2	39.0	13200	121000	17.4	30.6	15500	117000	13.0	22.8	15500	117000	8.7	15.2	15500	117000
	74	23.7	39.0	14400	119000	15.8	30.6	17000	114000	11.8	22.8	17000	114000	7.9	15.2	17000	114000
	80	21.9	30.1	12100	122000	14.6	25.7	15500	117000	10.9	19.2	15500	117000	7.3	12.8	15500	117000
	88	19.9	30.1	13300	121000	13.3	25.7	17000	114000	9.9	19.2	17000	114000	6.6	12.8	17000	114000
	93	18.9	24.1	11300	124000	12.6	22.1	15500	117000	9.4	16.5	15500	117000	6.3	11.0	15500	117000
	102	17.2	24.1	12300	122000	11.5	22.1	17000	114000	8.6	16.5	16900	114000	5.7	11.0	16900	114000
	112	15.7	22.6	12700	121000	10.4	18.3	15500	117000	7.8	13.7	15500	117000	5.2	9.2	15500	117000
	123	14.3	22.6	13900	119000	9.5	18.3	16900	114000	7.1	13.7	17000	114000	4.8	9.2	17000	114000
	138	12.7	18.8	13000	121000	8.5	14.9	15500	117000	6.3	11.2	15600	117000	4.2	7.4	15500	117000
	151	11.6	18.8	14200	119000	7.8	14.9	16900	114000	5.8	11.2	17100	114000	3.9	7.5	17000	114000
	163	10.8	15.1	12400	122000	7.2	12.6	15500	117000	5.4	9.4	15500	117000	3.6	6.3	15500	117000
	179	9.8	15.1	13600	120000	6.6	12.6	17000	114000	4.9	9.4	17000	114000	3.3	6.3	17000	114000
	189	9.3	12.0	11400	124000	6.2	10.9	15600	117000	4.6	8.1	15500	117000	3.1	5.4	15500	117000

Selection Tables for Reducers (60Hz Input)

■**IMPORTANT**: Please refer to page 144 for Reducer Selection Table notes.

Refer to Page 166-187 for 50 Hz Input

Size	n1	1750				1165				870				580			
	Ratio i	n2 [rpm]	P1 [kW]	Tout [Nm]	Pro [N]	n2 [rpm]	P1 [kW]	Tout [Nm]	Pro [N]	n2 [rpm]	P1 [kW]	Tout [Nm]	Pro [N]	n2 [rpm]	P1 [kW]	Tout [Nm]	Pro [N]
4F185 [Dimension Drawings from page 198]	207	8.5	12.0	12500	122000	5.7	10.9	17000	114000	4.2	8.2	17000	114000	2.8	5.5	17000	114000
	227	7.8	9.8	11200	124000	5.2	8.2	14000	119000	3.9	6.1	14000	119000	2.6	4.1	14000	119000
	249	7.1	9.8	12200	122000	4.7	8.2	15300	117000	3.5	6.1	15300	117000	2.4	4.1	15300	117000
	278	6.3	8.6	12000	123000	4.2	7.4	15500	117000	3.2	5.5	15500	117000	2.1	3.7	15500	117000
	305	5.8	8.6	13200	121000	3.9	7.4	17000	114000	2.9	5.6	17000	114000	1.9	3.7	17000	114000
4F190 [Dimension Drawings from page 198]	11	159.1	68.4 ※	3610	88400	106.0	68.4	5430	96500	79.1	68.4	7270	102000	52.8	54.4	8670	114000
	13	134.7	68.4 ※	4410	92300	89.7	68.4	6620	100000	67.0	68.4	8860	105000	44.7	54.4	10600	117000
	14	125.0	68.4 ※	4820	94100	83.3	68.4	7240	102000	62.2	68.4	9690	106000	41.5	54.4	11600	119000
	16	109.4	68.4 ※	5510	96600	72.9	68.4	8270	104000	54.4	68.4	11100	108000	36.3	53.4	13000	121000
	18	97.3	68.4 ※	6020	98400	64.8	68.4	9050	105000	48.4	68.4	12100	109000	32.3	53.4	14200	119000
	19	92.2	50.6 ※	4890	104000	61.4	50.6	7340	113000	45.8	46.7	9070	121000	30.6	31.1	9070	128000
	21	83.4	50.6 ※	5350	107000	55.5	50.6	8030	115000	41.5	46.7	9930	123000	27.7	31.1	9910	126000
	22	79.6	50.6 ※	5700	108000	53.0	50.6	8570	116000	39.6	41.3	9360	127000	26.4	27.5	9350	127000
	25	70.0	50.6 ※	6240	110000	46.6	50.6	9370	118000	34.8	41.3	10200	126000	23.2	27.5	10200	126000
	26	67.4	50.6 ※	6520	111000	44.9	49.1	9500	120000	33.5	36.7	9510	127000	22.4	24.4	9480	127000
	28	62.5	50.6 ※	7130	113000	41.7	49.1	10400	121000	31.1	36.7	10400	125000	20.8	24.4	10400	125000
	35	50.0	50.6 ※	8960	117000	33.3	50.6	13500	120000	24.9	50.5	18000	112000	16.6	33.7	18000	112000
	39	44.9	50.6	9800	119000	29.9	50.6	14700	118000	22.4	46.2	18000	112000	14.9	30.8	18000	112000
	42	41.7	50.6	10600	120000	27.8	50.6	15900	116000	20.8	42.8	18000	112000	13.9	28.5	18000	112000
	46	38.1	50.6	11600	122000	25.4	50.6	17400	113000	19.0	39.1	18000	112000	12.7	26.1	18000	112000
	48	36.5	50.6	12200	122000	24.3	49.6	18000	112000	18.2	37.1	18000	112000	12.1	24.7	18000	112000
	53	33.1	50.6	13400	120000	22.0	45.4	18000	112000	16.5	33.9	18000	112000	11.0	22.6	18000	112000
	54	32.5	50.6	13800	120000	21.6	43.8	18000	112000	16.2	32.7	18000	112000	10.8	21.8	18000	112000
	60	29.2	50.6	15100	117000	19.5	40.0	18000	112000	14.5	29.9	18000	112000	9.7	19.9	18000	112000
	67	26.2	41.0	13900	119000	17.4	35.4	18000	112000	13.0	26.5	18000	112000	8.7	17.6	18000	112000
	74	23.7	41.0	15200	117000	15.8	32.4	18000	112000	11.8	24.2	18000	112000	7.9	16.1	18000	112000
	80	21.9	35.2	14200	119000	14.6	29.8	18000	112000	10.9	22.2	18000	112000	7.3	14.8	18000	112000
	88	19.9	35.2	15500	117000	13.3	27.2	18000	112000	9.9	20.3	18000	112000	6.6	13.6	18000	112000
	93	18.9	30.7	14300	119000	12.6	25.7	18000	112000	9.4	19.2	18000	112000	6.3	12.8	18000	112000
	102	17.2	30.7	15700	116000	11.5	23.5	18000	112000	8.6	17.5	18000	112000	5.7	11.7	18000	112000
	112	15.7	24.3	13700	120000	10.4	21.3	18000	112000	7.8	15.9	18000	112000	5.2	10.6	18000	112000
	123	14.3	24.3	15000	118000	9.5	19.4	18000	112000	7.1	14.5	18000	112000	4.8	9.7	18000	112000
	138	12.7	20.9	14500	118000	8.5	17.3	18000	112000	6.3	12.9	18000	112000	4.2	8.6	18000	112000
	151	11.6	20.9	15800	116000	7.8	15.8	18000	112000	5.8	11.8	18000	112000	3.9	7.9	18000	112000
	163	10.8	18.2	14900	118000	7.2	14.6	18000	112000	5.4	10.9	18000	112000	3.6	7.3	18000	112000
	179	9.8	18.2	16300	115000	6.6	13.3	18000	112000	4.9	10.0	18000	112000	3.3	6.7	18000	112000
	189	9.3	15.3	14500	118000	6.2	12.6	18000	112000	4.6	9.4	18000	112000	3.1	6.3	18000	112000
	207	8.5	15.3	15900	116000	5.7	11.5	18000	112000	4.2	8.7	18000	112000	2.8	5.8	18000	112000
	227	7.8	13.5	15400	117000	5.2	10.5	18000	112000	3.9	7.8	18000	112000	2.6	5.2	18000	112000
	249	7.1	13.5	16900	114000	4.7	9.6	18000	112000	3.5	7.2	18000	112000	2.4	4.8	18000	112000
	278	6.3	11.8	16500	115000	4.2	8.6	18000	112000	3.2	6.4	18000	112000	2.1	4.3	18000	112000
	305	5.8	11.7	18000	112000	3.9	7.9	18000	112000	2.9	5.9	18000	112000	1.9	3.9	18000	112000
4F195 [Dimension Drawings from page 198]	11	159.1	75.0 ※	3960	87500	106.0	75.0	5950	95100	79.1	74.5	7920	100000	52.8	54.4	8670	114000
	13	134.7	75.0 ※	4830	91200	89.7	75.0	7260	98300	67.0	75.0	9720	103000	44.7	54.4	10600	117000
	14	125.0	75.0 ※	5280	92900	83.3	75.0	7940	99900	62.2	75.0	10600	104000	41.5	54.4	11600	119000
	16	109.4	75.0 ※	6046	95200	72.9	75.0	9070	10200	54.4	71.0	11500	107000	36.3	53.4	13000	121000
	18	97.3	75.0 ※	6600	96900	64.8	75.0	9920	103000	48.4	71.0	12600	108000	32.3	53.4	14200	119000
	19	92.2	55.0 ※	5310	103000	61.4	55.0	7980	112000	45.8	47.6	9250	120000	30.6	31.8	9270	127000
	21	83.4	55.0 ※	5810	105000	55.5	55.0	8730	113000	41.5	47.6	10100	122000	27.7	31.8	10100	126000
	22	79.6	55.0 ※	6200	107000	53.0	55.0	9310	114000	39.6	42.1	9540	126000	26.4	28.0	9520	127000
	25	70.0	55.0 ※	6780	109000	46.6	55.0	10200	116000	34.8	42.1	10400	125000	23.2	28.0	10400	125000
	26	67.4	55.0 ※	7080	109000	44.9	50.1	9690	119000	33.5	37.4	9690	127000	22.4	24.9	9680	127000
	28	62.5	55.0 ※	7750	111000	41.7	50.1	10600	121000	31.1	37.4	10600	125000	20.8	24.9	10600	125000
	35	50.0	55.0 ※	9740	115000	33.3	55.0	14600	118000	24.9	50.5	18000	112000	16.6	33.7	18000	112000
	39	44.9	55.0	10700	117000	29.9	55.0	16000	116000	22.4	46.2	18000	112000	14.9	30.8	18000	112000
	42	41.7	55.0	11500	118000	27.8	55.0	17300	114000	20.8	42.8	18000	112000	13.9	28.5	18000	112000
	46	38.1	55.0	12600	119000	25.4	52.3	18000	112000	19.0	39.1	18000	112000	12.7	26.1	18000	112000
	48	36.5	55.0	13300	120000	24.3	49.6	18000	112000	18.2	37.1	18000	112000	12.1	24.7	18000	112000
	53	33.1	55.0	14500	118000	22.0	45.4	18000	112000	16.5	33.9	18000	112000	11.0	22.6	18000	112000
	54	32.5	55.0	15100	117000	21.6	43.8	18000	112000	16.2	32.7	18000	112000	10.8	21.8	18000	112000
	60	29.2	55.0	16500	115000	19.5	40.0	18000	112000	14.5	29.9	18000	112000	9.7	19.9	18000	112000
	67	26.2	48.1	16300	115000	17.4	35.4	18000	112000	13.0	26.5	18000	112000	8.7	17.6	18000	112000

Selection Tables for Reducers (60Hz Input)

■**IMPORTANT**: Please refer to page 144 for Reducer Selection Table notes.

Refer to Page 166-187 for 50 Hz Input

Size	n1	1750				1165				870				580			
	Ratio i	n2 [rpm]	P1 [kW]	Tout [Nm]	Pro [N]	n2 [rpm]	P1 [kW]	Tout [Nm]	Pro [N]	n2 [rpm]	P1 [kW]	Tout [Nm]	Pro [N]	n2 [rpm]	P1 [kW]	Tout [Nm]	Pro [N]
4F195 [Dimension Drawings from page 198]	74	23.7	48.1	17800	113000	15.8	32.4	18000	112000	11.8	24.2	18000	112000	7.9	16.1	18000	112000
	80	21.9	40.5	16300	115000	14.6	29.8	18000	112000	10.9	22.2	18000	112000	7.3	14.8	18000	112000
	88	19.9	40.5	17800	113000	13.3	27.2	18000	112000	9.9	20.3	18000	112000	6.6	13.6	18000	112000
	93	18.9	37.8	17600	113000	12.6	25.7	18000	112000	9.4	19.2	18000	112000	6.3	12.8	18000	112000
	102	17.2	35.2	18000	112000	11.5	23.5	18000	112000	8.6	17.5	18000	112000	5.7	11.7	18000	112000
	112	15.7	30.1	17000	114000	10.4	21.3	18000	112000	7.8	15.9	18000	112000	5.2	10.6	18000	112000
	123	14.3	29.2	18000	112000	9.5	19.4	18000	112000	7.1	14.5	18000	112000	4.8	9.7	18000	112000
	138	12.7	26.0	18000	112000	8.5	17.3	18000	112000	6.3	12.9	18000	112000	4.2	8.6	18000	112000
	151	11.6	23.8	18000	112000	7.8	15.8	18000	112000	5.8	11.8	18000	112000	3.9	7.9	18000	112000
	163	10.8	20.9	17200	114000	7.2	14.6	18000	112000	5.4	10.9	18000	112000	3.6	7.3	18000	112000
	179	9.8	20.0	18000	112000	6.6	13.3	18000	112000	4.9	10.0	18000	112000	3.3	6.7	18000	112000
	189	9.3	18.8	17900	113000	6.2	12.6	18000	112000	4.6	9.4	18000	112000	3.1	6.3	18000	112000
	207	8.5	17.3	18000	112000	5.7	11.5	18000	112000	4.2	8.7	18000	112000	2.8	5.8	18000	112000
	227	7.8	15.6	17800	113000	5.2	10.5	18000	112000	3.9	7.8	18000	112000	2.6	5.2	18000	112000
	249	7.1	14.4	18000	112000	4.7	9.6	18000	112000	3.5	7.2	18000	112000	2.4	4.8	18000	112000
	278	6.3	12.9	18000	112000	4.2	8.6	18000	112000	3.2	6.4	18000	112000	2.1	4.3	18000	112000
	305	5.8	11.7	18000	112000	3.9	7.9	18000	112000	2.9	5.9	18000	112000	1.9	3.9	18000	112000

Selection Tables for Reducers (50Hz Input)

■ **IMPORTANT**: Please refer to page 144 for Reducer Selection Table notes.

Size	n1	1450				980				720				50		
	Ratio i	n2 [rpm]	P1 [kW]	Tout [Nm]	Pro [N]	n2 [rpm]	P1 [kW]	Tout [Nm]	Pro [N]	n2 [rpm]	P1 [kW]	Tout [Nm]	Pro [N]	n2 [rpm]	Tout [Nm]	Pro [N]
4A100 [Dimension Drawings from page 198]	11	131.9	2.4	150	17400	89.1	2.4	222	19300	65.5	2.3	290	20900	4.6	290	26800
	13	111.6	2.4	182	18300	75.4	2.4	270	20300	55.4	2.3	353	21900	3.9	353	26600
	14	103.6	2.4	200	18800	70.0	2.4	296	20700	51.5	2.3	386	22400	3.6	386	26400
	16	90.7	2.4	228	19400	61.3	2.4	338	21400	45.0	2.3	442	23100	3.2	442	26100
	18	80.6	2.4	249	19900	54.5	2.4	369	21900	40.0	2.3	483	23600	2.8	483	25900
	19	76.4	2.0	274	20400	51.6	2.0	405	22400	37.9	2.0	531	24100	2.7	531	25600
	21	69.1	2.4	299	20800	46.7	2.4	443	22800	34.3	2.3	580	24500	2.4	580	25200
	26	55.8	2.4	365	21800	37.7	2.4	541	23900	27.7	2.2	689	24300	2.0	775	23400
	28	51.8	2.4	399	22300	35.0	2.4	591	24300	25.8	2.2	753	23700	1.8	849	22500
	35	41.5	2.4	502	23500	28.0	2.4	743	23800	20.6	1.8	776	23400	1.5	776	23400
	39	37.2	2.4	549	23900	25.2	2.4	813	23000	18.5	1.8	849	22500	1.3	849	22500
	42	34.6	2.4	594	24300	23.4	2.1	777	23400	17.2	1.5	778	23400	1.2	777	23400
	46	31.6	2.4	649	24700	21.3	2.1	849	22500	15.7	1.6	849	22500	1.1	849	22500
	48	30.3	2.4	685	24300	20.5	1.8	776	23400	15.0	1.3	775	23400	1.1	778	23400
	53	27.4	2.4	748	23700	18.5	1.8	849	22500	13.6	1.4	849	22500	1.0	849	22500
	54	26.9	2.0	657	24600	18.2	1.6	777	23400	13.4	1.2	778	23400	1.0	776	23400
	60	24.2	2.0	717	24000	16.4	1.6	849	22500	12.0	1.2	849	22500	0.9	849	22500
	67	21.7	1.9	776	23400	14.7	1.3	776	23400	10.8	1.0	776	23400	0.8	776	23400
	74	19.6	1.9	849	22500	13.3	1.3	849	22500	9.8	1.0	849	22500	0.7	849	22500
	80	18.2	1.3	617	24900	12.3	1.1	776	23400	9.0	0.8	776	23400	0.7	776	23400
	88	16.5	1.3	675	24400	11.2	1.1	849	22500	8.2	0.8	849	22500	0.6	849	22500
	93	15.6	1.2	682	24400	10.6	0.9	776	23400	7.8	0.7	776	23400	0.6	784	23400
	102	14.3	1.3	746	23700	9.7	1.0	849	22500	7.1	0.7	849	22500	0.5	849	22500
	112	13.0	1.0	663	24500	8.8	0.8	776	23400	6.5	0.6	776	23400	0.5	776	23400
	123	11.8	1.0	725	23900	8.0	0.8	849	22500	5.9	0.6	849	22500	0.5	849	22500
	138	10.6	0.8	652	24600	7.1	0.6	776	23400	5.3	0.5	776	23400	0.4	775	23400
	151	9.6	0.8	713	24100	6.5	0.7	849	22500	4.8	0.5	849	22500	0.4	849	22500
	163	8.9	0.6	555	25400	6.1	0.5	777	23400	4.5	0.4	776	23400	0.4	776	23400
	179	8.1	0.6	607	25000	5.5	0.6	849	22500	4.1	0.4	849	22500	0.3	849	22500
	189	7.7	0.5	592	25100	5.2	0.5	777	23400	3.9	0.3	776	23400	0.3	765	23400
	207	7.0	0.6	647	24700	4.8	0.5	849	22500	3.5	0.4	849	22500	0.3	849	22500
	227	6.4	0.4	602	25100	4.4	0.4	776	23400	3.2	0.3	775	23400	0.3	760	23400
	249	5.9	0.5	658	24600	4.0	0.4	849	22500	2.9	0.3	849	22500	0.2	849	22500
	278	5.3	0.4	732	23900	3.6	0.3	775	23400	2.6	0.2	776	23400	0.2	784	23400
	305	4.8	0.5	801	23100	3.3	0.4	849	22500	2.4	0.3	849	22500	0.2	849	22500
4A105 [Dimension Drawings from page 198]	11	131.9	3.2	203	17100	89.1	3.1	285	18900	65.5	2.3	290	20900	4.6	290	26800
	13	111.6	3.2	247	18000	75.4	3.1	348	19900	55.4	2.3	353	21900	3.9	353	26600
	14	103.6	3.2	270	18400	70.0	3.1	380	20300	51.5	2.3	386	22400	3.6	386	26400
	16	90.7	3.2	309	19000	61.3	3.1	435	20900	45.0	2.3	442	23100	3.2	442	26100
	18	80.6	3.2	338	19400	54.5	3.1	475	21300	40.0	2.3	483	23600	2.8	483	25900
	19	76.4	3.2	371	19800	51.6	3.0	521	21700	37.9	2.3	531	24100	2.7	531	25600
	21	69.1	3.2	405	20200	46.7	3.1	570	22100	34.3	2.3	580	24500	2.4	580	25200
	26	55.8	3.2	494	21100	37.7	2.8	639	23300	27.7	2.2	689	24300	2.0	857	22400
	28	51.8	3.2	541	21500	35.0	2.8	701	23700	25.8	2.2	753	23700	1.8	938	21300
	35	41.5	3.2	680	22500	28.0	2.9	904	21800	20.6	2.3	955	21100	1.5	955	21100
	39	37.2	3.2	743	22900	25.2	2.9	989	20500	18.5	2.3	1050	19600	1.3	1050	19600
	42	34.6	3.2	803	23100	23.4	2.5	931	21400	17.2	1.8	931	21400	1.2	930	21400
	46	31.6	3.2	879	22200	21.3	2.5	1020	20100	15.7	1.9	1020	20100	1.1	1020	20100
	48	30.3	3.2	927	21500	20.5	2.2	932	21400	15.0	1.6	933	21400	1.1	930	21400
	53	27.4	3.2	1010	20100	18.5	2.2	1020	20100	13.6	1.6	1020	20100	1.0	1020	20100
	54	26.9	2.5	813	23000	18.2	1.9	934	21400	13.4	1.4	931	21400	1.0	929	21400
	60	24.2	2.5	887	22000	16.4	2.0	1020	20100	12.0	1.4	1020	20100	0.9	1020	20100
	67	21.7	2.3	932	21400	14.7	1.6	932	21400	10.8	1.2	932	21400	0.8	932	21400
	74	19.6	2.3	1020	20100	13.3	1.6	1020	20100	9.8	1.2	1020	20100	0.7	1020	20100
	80	18.2	1.7	813	23000	12.3	1.3	932	21400	9.0	1.0	932	21400	0.7	932	21400
	88	16.5	1.7	889	22000	11.2	1.3	1020	20100	8.2	1.0	1020	20100	0.6	1020	20100
	93	15.6	1.6	896	21900	10.6	1.1	934	21400	7.8	0.8	932	21400	0.6	932	21400

Selection Tables for Reducers (50Hz Input)

■**IMPORTANT**: Please refer to page 144 for Reducer Selection Table notes.

Size	n1	1450				980				720				50		
	Ratio i	n2 [rpm]	P1 [kW]	Tout [Nm]	Pro [N]	n2 [rpm]	P1 [kW]	Tout [Nm]	Pro [N]	n2 [rpm]	P1 [kW]	Tout [Nm]	Pro [N]	n2 [rpm]	Tout [Nm]	Pro [N]
4A105 [Dimension Drawings from page 198]	102	14.3	1.6	980	20700	9.7	1.2	1020	20100	7.1	0.9	1020	20100	0.5	1020	20100
	112	13.0	1.2	815	23000	8.8	1.0	932	21400	6.5	0.7	932	21400	0.5	932	21400
	123	11.8	1.2	891	22000	8.0	1.0	1020	20100	5.9	0.7	1020	20100	0.5	1020	20100
	138	10.6	1.1	902	21800	7.1	0.8	932	21400	5.3	0.6	932	21400	0.4	921	21400
	151	9.6	1.1	992	20500	6.5	0.8	1020	20100	4.8	0.6	1020	20100	0.4	1020	20100
	163	8.9	0.8	769	23500	6.1	0.6	922	21600	4.5	0.5	922	21600	0.4	920	21600
	179	8.1	0.8	841	22600	5.5	0.7	1010	20200	4.1	0.5	1010	20200	0.3	1010	20200
	189	7.7	0.7	781	23400	5.2	0.5	899	21900	3.9	0.4	919	21600	0.3	931	21600
	207	7.0	0.7	854	22500	4.8	0.6	984	20600	3.5	0.4	1010	20300	0.3	1010	20300
	227	6.4	0.5	698	24200	4.4	0.4	821	22900	3.2	0.3	820	22900	0.3	840	22900
	249	5.9	0.6	763	23600	4.0	0.5	897	21900	2.9	0.3	897	21900	0.2	897	21900
	278	5.3	0.5	850	22500	3.6	0.4	931	21400	2.6	0.3	933	21400	0.2	932	21400
	305	4.8	0.6	930	21500	3.3	0.4	1020	20100	2.4	0.3	1020	20100	0.2	1020	20100
4A110 [Dimension Drawings from page 198]	19	76.4	3.6	414	19600	51.6	3.5	600	21300	37.9	2.6	601	23700	2.7	602	25100
	21	69.1	3.6	453	20000	46.7	3.5	657	21700	34.3	2.6	657	24100	2.4	657	24600
	26	55.8	4.0	552	20800	37.7	4.0	817	22400	27.7	3.0	1010	20200	2.0	1010	20200
	28	51.8	3.6	603	21200	35.0	3.6	893	22000	25.8	3.6	1220	16000	1.8	1220	15800
	35	41.5	3.6	759	22100	28.0	3.6	1120	18200	20.6	2.6	1120	18200	1.5	1120	18200
	39	37.2	3.6	830	22400	25.2	3.6	1220	15800	18.5	2.6	1220	15800	1.3	1220	15800
	42	34.6	4.0	897	21900	23.4	3.0	1120	18200	17.2	2.0	1120	18200	1.2	1120	18200
	46	31.6	3.6	981	20700	21.3	3.0	1220	15800	15.7	2.2	1220	15800	1.1	1220	15800
	48	30.3	3.6	1030	19800	20.5	2.6	1120	18200	15.0	1.9	1120	18200	1.1	1120	18200
	53	27.4	3.6	1130	17900	18.5	2.6	1220	15800	13.6	1.9	1220	15800	1.0	1220	15800
	54	26.9	3.2	1050	19500	18.2	2.3	1120	18200	13.4	1.7	1120	18200	1.0	1120	18200
	60	24.2	3.2	1150	17600	16.4	2.3	1220	15800	12.0	1.7	1220	15800	0.9	1220	15800
	67	21.7	2.8	1110	18300	14.7	1.9	1120	18200	10.8	1.4	1120	18200	0.8	1120	18200
	74	19.6	2.8	1220	16000	13.3	1.9	1220	15800	9.8	1.4	1220	15800	0.7	1220	15800
	80	18.2	2.0	930	21500	12.3	1.6	1120	18200	9.0	1.2	1120	18200	0.7	1120	18200
	88	16.5	2.0	1020	20100	11.2	1.6	1220	15800	8.2	1.2	1220	15800	0.6	1220	15800
	93	15.6	1.9	1070	19100	10.6	1.3	1120	18200	7.8	1.0	1120	18200	0.6	1110	18200
	102	14.3	1.9	1170	17000	9.7	1.4	1220	15800	7.1	1.0	1220	15800	0.5	1220	15800
	112	13.0	1.5	1020	20000	8.8	1.2	1120	18200	6.5	0.9	1120	18200	0.5	1120	18200
	123	11.8	1.5	1120	18200	8.0	1.2	1220	15800	5.9	0.9	1220	15800	0.5	1220	15800
	138	10.6	1.3	1090	18800	7.1	0.9	1120	18200	5.3	0.7	1120	18200	0.4	1110	18200
	151	9.6	1.3	1190	16700	6.5	1.0	1220	15800	4.8	0.7	1220	15800	0.4	1220	15800
	163	8.9	0.9	936	21400	6.1	0.8	1120	18200	4.5	0.6	1120	18200	0.4	1120	18200
	179	8.1	1.0	1020	20000	5.5	0.8	1220	15800	4.1	0.6	1220	15800	0.3	1220	15800
	189	7.7	0.9	985	20600	5.2	0.7	1120	18200	3.9	0.5	1120	18200	0.3	1130	18200
	207	7.0	0.9	1080	19000	4.8	0.7	1220	15800	3.5	0.5	1220	15800	0.3	1220	15800
	227	6.4	0.7	923	21600	4.4	0.6	1120	18200	3.2	0.4	1120	18200	0.3	1120	18200
	249	5.9	0.7	1010	20200	4.0	0.6	1220	15800	2.9	0.5	1220	15800	0.2	1220	15800
	278	5.3	0.7	1120	18200	3.6	0.5	1120	18200	2.6	0.3	1120	18200	0.2	1130	18200
	305	4.8	0.7	1220	15800	3.3	0.5	1220	15800	2.4	0.4	1220	15800	0.2	1220	15800
4A115 [Dimension Drawings from page 198]	19	76.4	3.9	457	19400	51.6	3.5	600	21300	37.9	2.6	601	23700	2.7	602	25100
	21	69.1	4.0	500	19700	46.7	3.5	657	21700	34.3	2.6	657	24100	2.4	657	24600
	26	55.8	3.9	609	20500	37.7	3.9	902	21900	27.7	3.2	1010	20200	2.0	1010	20200
	28	51.8	4.0	666	20900	35.0	4.0	986	20600	25.8	3.8	1290	13900	1.8	1290	13900
	35	41.5	4.0	838	21600	28.0	4.0	1240	15400	20.6	3.0	1290	13900	1.5	1290	13900
	39	37.2	4.0	916	21600	25.2	3.8	1290	13900	18.5	2.8	1290	13900	1.3	1290	13900
	42	34.6	3.9	985	20600	23.4	3.5	1290	13900	17.2	2.5	1290	13900	1.2	1290	13900
	46	31.6	3.9	1080	19000	21.3	3.2	1290	13900	15.7	2.4	1290	13900	1.1	1290	13900
	48	30.3	3.9	1140	17800	20.5	3.0	1290	13900	15.0	2.2	1290	13900	1.1	1290	13900
	53	27.4	3.9	1240	15300	18.5	2.8	1290	13900	13.6	2.1	1290	13900	1.0	1290	13900
	54	26.9	3.9	1290	14000	18.2	2.6	1290	13900	13.4	1.9	1290	13900	1.0	1290	13900
	60	24.2	3.6	1290	13900	16.4	2.5	1290	13900	12.0	1.8	1290	13900	0.9	1290	13900
	67	21.7	3.2	1270	14500	14.7	2.2	1290	13900	10.8	1.6	1290	13900	0.8	1290	13900
	74	19.6	2.9	1290	13900	13.3	2.0	1290	13900	9.8	1.5	1290	13900	0.7	1290	13900
	80	18.2	2.3	1080	19000	12.3	1.8	1290	13900	9.0	1.4	1290	13900	0.7	1290	13900
	88	16.5	2.3	1180	16800	11.2	1.7	1290	13900	8.2	1.3	1290	13900	0.6	1290	13900
	93	15.6	2.2	1250	15000	10.6	1.6	1290	13900	7.8	1.1	1290	13900	0.6	1290	13900
	102	14.3	2.1	1290	13900	9.7	1.5	1290	13900	7.1	1.1	1290	13900	0.5	1290	13900
	112	13.0	1.9	1230	15600	8.8	1.3	1290	13900	6.5	1.0	1290	13900	0.5	1290	13900

Selection Tables for Reducers (50Hz Input)

■ **IMPORTANT**: Please refer to page 144 for Reducer Selection Table notes.

Size	n1	1450				980				720				50		
	Ratio i	n2 [rpm]	P1 [kW]	Tout [Nm]	Pro [N]	n2 [rpm]	P1 [kW]	Tout [Nm]	Pro [N]	n2 [rpm]	P1 [kW]	Tout [Nm]	Pro [N]	n2 [rpm]	Tout [Nm]	Pro [N]
4A115 [Dimension Drawings from page 198]	123	11.8	1.8	1290	13900	8.0	1.2	1290	13900	5.9	0.9	1290	13900	0.5	1290	13900
	138	10.6	1.5	1270	14600	7.1	1.0	1290	13900	5.3	0.8	1290	13900	0.4	1290	13900
	151	9.6	1.5	1290	13900	6.5	1.0	1290	13900	4.8	0.8	1290	13900	0.4	1290	13900
	163	8.9	1.1	1100	18600	6.1	0.9	1290	13900	4.5	0.6	1290	13900	0.4	1290	13900
	179	8.1	1.2	1200	16300	5.5	0.9	1290	13900	4.1	0.6	1290	13900	0.3	1290	13900
	189	7.7	1.0	1160	17400	5.2	0.8	1290	13900	3.9	0.6	1290	13900	0.3	1290	13900
	207	7.0	1.1	1270	14600	4.8	0.7	1290	13900	3.5	0.6	1290	13900	0.3	1290	13900
	227	6.4	0.8	1050	19600	4.4	0.6	1290	13900	3.2	0.5	1290	13900	0.3	1290	13900
	249	5.9	0.8	1140	17700	4.0	0.6	1290	13900	2.9	0.5	1290	13900	0.2	1290	13900
	278	5.3	0.8	1280	14200	3.6	0.5	1290	13900	2.6	0.4	1290	13900	0.2	1290	13900
	305	4.8	0.7	1290	13900	3.3	0.5	1290	13900	2.4	0.4	1290	13900	0.2	1290	13900
4A120 [Dimension Drawings from page 198]	11	131.9	9.6	612	14900	89.1	9.6	906	15600	65.5	7.3	934	17400	4.6	934	21400
	13	111.6	9.6	746	15300	75.4	9.0	1030	16200	55.4	7.2	1130	17700	3.9	1140	17800
	14	103.6	9.6	816	15500	70.0	9.0	1120	16300	51.5	7.2	1230	15600	3.6	1250	15200
	16	90.7	9.6	933	15600	61.3	8.5	1220	16000	45.0	6.6	1290	13900	3.2	1290	13900
	18	80.6	9.6	1020	15700	54.5	8.2	1290	13900	40.0	6.1	1290	13900	2.8	1290	13900
	19	76.4	6.5	763	17700	51.6	6.4	1100	18500	37.9	4.9	1140	17800	2.7	1140	17800
	21	69.1	6.6	834	17900	46.7	6.4	1210	16200	34.3	4.9	1240	15200	2.4	1240	15200
	22	66.0	6.6	890	18000	44.6	6.0	1200	16400	32.8	4.7	1290	14000	2.3	1290	13900
	25	58.0	6.6	973	18200	39.2	5.9	1290	13900	28.8	4.4	1290	13900	2.0	1290	13900
	26	55.8	7.0	1020	18300	37.7	6.0	1290	13900	27.7	4.0	1290	13900	2.0	1290	13900
	28	51.8	6.6	1110	18300	35.0	5.2	1290	13900	25.8	3.8	1290	13900	1.8	1290	13900
	35	41.5	5.1	1080	18900	28.0	4.1	1290	13900	20.6	3.0	1290	13900	1.5	1290	13900
	39	37.2	5.1	1190	16700	25.2	3.8	1290	13900	18.5	2.8	1290	13900	1.3	1290	13900
	42	34.6	5.1	1280	14200	23.4	3.5	1290	13900	17.2	2.5	1290	13900	1.2	1290	13900
	46	31.6	4.7	1290	13900	21.3	3.2	1290	13900	15.7	2.4	1290	13900	1.1	1290	13900
	48	30.3	4.4	1290	13900	20.5	3.0	1290	13900	15.0	2.2	1290	13900	1.1	1290	13900
	53	27.4	4.1	1290	13900	18.5	2.8	1290	13900	13.6	2.1	1290	13900	1.0	1290	13900
	54	26.9	3.9	1290	13900	18.2	2.6	1290	13900	13.4	1.9	1290	13900	1.0	1290	13900
	60	24.2	3.6	1290	13900	16.4	2.5	1290	13900	12.0	1.8	1290	13900	0.9	1290	13900
	67	21.7	3.2	1290	13900	14.7	2.2	1290	13900	10.8	1.6	1290	13900	0.8	1290	13900
	74	19.6	2.9	1290	13900	13.3	2.0	1290	13900	9.8	1.5	1290	13900	0.7	1290	13900
	80	18.2	2.7	1290	13900	12.3	1.8	1290	13900	9.0	1.4	1290	13900	0.7	1290	13900
	88	16.5	2.5	1290	13900	11.2	1.7	1290	13900	8.2	1.3	1290	13900	0.6	1290	13900
	93	15.6	2.3	1290	13900	10.6	1.6	1290	13900	7.8	1.1	1290	13900	0.6	1290	13900
	102	14.3	2.1	1290	13900	9.7	1.5	1290	13900	7.1	1.1	1290	13900	0.5	1290	13900
	112	13.0	1.9	1290	13900	8.8	1.3	1290	13900	6.5	1.0	1290	13900	0.5	1290	13900
	123	11.8	1.8	1290	13900	8.0	1.2	1290	13900	5.9	0.9	1290	13900	0.5	1290	13900
	138	10.6	1.5	1290	13900	7.1	1.0	1290	13900	5.3	0.8	1290	13900	0.4	1290	13900
	151	9.6	1.5	1290	13900	6.5	1.0	1290	13900	4.8	0.8	1290	13900	0.4	1290	13900
	163	8.9	1.3	1290	13900	6.1	0.9	1290	13900	4.5	0.6	1290	13900	0.4	1290	13900
	179	8.1	1.2	1290	13900	5.5	0.9	1290	13900	4.1	0.6	1290	13900	0.3	1290	13900
	189	7.7	1.1	1290	13900	5.2	0.8	1290	13900	3.9	0.6	1290	13900	0.3	1290	13900
	207	7.0	1.1	1290	13900	4.8	0.7	1290	13900	3.5	0.6	1290	13900	0.3	1290	13900
	227	6.4	0.9	1290	13900	4.4	0.6	1290	13900	3.2	0.5	1290	13900	0.3	1290	13900
	249	5.9	0.9	1290	13900	4.0	0.6	1290	13900	2.9	0.5	1290	13900	0.2	1290	13900
	278	5.3	0.8	1290	13900	3.6	0.5	1290	13900	2.6	0.4	1290	13900	0.2	1290	13900
	305	4.8	0.7	1290	13900	3.3	0.5	1290	13900	2.4	0.4	1290	13900	0.2	1290	13900
4A125 [Dimension Drawings from page 198]	11	131.9	11.0	701	14400	89.1	9.9	934	15400	65.5	7.3	934	17400	4.6	934	21400
	13	111.6	11.0	855	14700	75.4	9.0	1030	16200	55.4	7.2	1130	17700	3.9	1140	17800
	14	103.6	11.0	935	14800	70.0	9.0	1120	16300	51.5	7.2	1230	15600	3.6	1250	15200
	16	90.7	11.0	1070	14900	61.3	8.5	1220	16000	45.0	6.6	1290	13900	3.2	1290	13900
	18	80.6	11.0	1170	14900	54.5	8.2	1290	13900	40.0	6.1	1290	13900	2.8	1290	13900
	19	76.4	7.5	876	17100	51.6	6.4	1100	18500	37.9	4.9	1140	17800	2.7	1140	17800
	21	69.1	7.6	957	17300	46.7	6.4	1210	16200	34.3	4.9	1240	15200	2.4	1240	15200
	22	66.0	7.6	1020	17300	44.6	6.0	1200	16400	32.8	4.7	1290	14000	2.3	1290	13900
	25	58.0	7.6	1120	17500	39.2	5.9	1290	13900	28.8	4.4	1290	13900	2.0	1290	13900
	26	55.8	8.0	1170	17100	37.7	6.0	1290	13900	27.7	4.0	1290	13900	2.0	1290	13900
	28	51.8	7.6	1280	14300	35.0	5.2	1290	13900	25.8	3.8	1290	13900	1.8	1290	13900
	35	41.5	6.0	1270	14600	28.0	4.1	1290	13900	20.6	3.0	1290	13900	1.5	1290	13900
	39	37.2	5.6	1290	13900	25.2	3.8	1290	13900	18.5	2.8	1290	13900	1.3	1290	13900
	42	34.6	5.1	1290	13900	23.4	3.5	1290	13900	17.2	2.5	1290	13900	1.2	1290	13900

Selection Tables for Reducers (50Hz Input)

■**IMPORTANT**: Please refer to page 144 for Reducer Selection Table notes.

Size	n1	1450				980				720				50		
	Ratio i	n2 [rpm]	P1 [kW]	Tout [Nm]	Pro [N]	n2 [rpm]	P1 [kW]	Tout [Nm]	Pro [N]	n2 [rpm]	P1 [kW]	Tout [Nm]	Pro [N]	n2 [rpm]	Tout [Nm]	Pro [N]
4A125 [Dimension Drawings from page 198]	46	31.6	4.7	1290	13900	21.3	3.2	1290	13900	15.7	2.4	1290	13900	1.1	1290	13900
	48	30.3	4.0	1290	13900	20.5	3.0	1290	13900	15.0	2.0	1290	13900	1.1	1290	13900
	53	27.4	4.1	1290	13900	18.5	2.8	1290	13900	13.6	2.1	1290	13900	1.0	1290	13900
	54	26.9	3.9	1290	13900	18.2	2.6	1290	13900	13.4	1.9	1290	13900	1.0	1290	13900
	60	24.2	3.6	1290	13900	16.4	2.5	1290	13900	12.0	1.8	1290	13900	0.9	1290	13900
	67	21.7	3.2	1290	13900	14.7	2.2	1290	13900	10.8	1.6	1290	13900	0.8	1290	13900
	74	19.6	2.9	1290	13900	13.3	2.0	1290	13900	9.8	1.5	1290	13900	0.7	1290	13900
	80	18.2	2.7	1290	13900	12.3	1.8	1290	13900	9.0	1.4	1290	13900	0.7	1290	13900
	88	16.5	2.5	1290	13900	11.2	1.7	1290	13900	8.2	1.3	1290	13900	0.6	1290	13900
	93	15.6	2.3	1290	13900	10.6	1.6	1290	13900	7.8	1.1	1290	13900	0.6	1290	13900
	102	14.3	2.1	1290	13900	9.7	1.5	1290	13900	7.1	1.1	1290	13900	0.5	1290	13900
	112	13.0	1.9	1290	13900	8.8	1.3	1290	13900	6.5	1.0	1290	13900	0.5	1290	13900
	123	11.8	1.8	1290	13900	8.0	1.2	1290	13900	5.9	0.9	1290	13900	0.5	1290	13900
	138	10.6	1.5	1290	13900	7.1	1.0	1290	13900	5.3	0.8	1290	13900	0.4	1290	13900
	151	9.6	1.5	1290	13900	6.5	1.0	1290	13900	4.8	0.8	1290	13900	0.4	1290	13900
	163	8.9	1.3	1290	13900	6.1	0.9	1290	13900	4.5	0.6	1290	13900	0.4	1290	13900
	179	8.1	1.2	1290	13900	5.5	0.9	1290	13900	4.1	0.6	1290	13900	0.3	1290	13900
	189	7.7	1.1	1290	13900	5.2	0.8	1290	13900	3.9	0.6	1290	13900	0.3	1290	13900
	207	7.0	1.1	1290	13900	4.8	0.7	1290	13900	3.5	0.6	1290	13900	0.3	1290	13900
	227	6.4	0.9	1290	13900	4.4	0.6	1290	13900	3.2	0.5	1290	13900	0.3	1290	13900
	249	5.9	0.9	1290	13900	4.0	0.6	1290	13900	2.9	0.5	1290	13900	0.2	1290	13900
	278	5.3	0.8	1290	13900	3.6	0.5	1290	13900	2.6	0.4	1290	13900	0.2	1290	13900
	305	4.8	0.7	1290	13900	3.3	0.5	1290	13900	2.4	0.4	1290	13900	0.2	1290	13900
4A140 [Dimension Drawings from page 198]	11	131.9	18.3	1170	11900	89.1	13.7	1290	13500	65.5	10.0	1290	13900	4.6	1290	13900
	13	111.6	16.5	1280	12400	75.4	11.2	1290	13900	55.4	8.3	1290	13900	3.9	1290	13900
	14	103.6	15.2	1290	12900	70.0	10.3	1290	13900	51.5	7.6	1290	13900	3.6	1290	13900
	16	90.7	13.3	1290	13700	61.3	9.0	1290	13900	45.0	6.6	1290	13900	3.2	1290	13900
	18	80.6	12.1	1290	13900	54.5	8.2	1290	13900	40.0	6.1	1290	13900	2.8	1290	13900
	19	76.4	11.1	1290	13900	51.6	7.5	1290	13900	37.9	5.5	1290	13900	2.7	1290	13900
	21	69.1	10.1	1290	13900	46.7	6.9	1290	13900	34.3	5.1	1290	13900	2.4	1290	13900
	22	66.0	9.5	1290	13900	44.6	6.5	1290	13900	32.8	4.8	1290	13900	2.3	1290	13900
	25	58.0	8.7	1290	13900	39.2	5.9	1290	13900	28.8	4.4	1290	13900	2.0	1290	13900
	26	55.8	8.3	1290	13900	37.7	5.6	1290	13900	27.7	4.1	1290	13900	2.0	1290	13900
	28	51.8	7.6	1290	13900	35.0	5.2	1290	13900	25.8	3.8	1290	13900	1.8	1290	13900
	35	41.5	6.1	1290	13900	28.0	4.1	1290	13900	20.6	3.0	1290	13900	1.5	1290	13900
	39	37.2	5.6	1290	13900	25.2	3.8	1290	13900	18.5	2.8	1290	13900	1.3	1290	13900
	42	34.6	5.1	1290	13900	23.4	3.5	1290	13900	17.2	2.5	1290	13900	1.2	1290	13900
	46	31.6	4.7	1290	13900	21.3	3.2	1290	13900	15.7	2.4	1290	13900	1.1	1290	13900
	48	30.3	4.4	1290	13900	20.5	3.0	1290	13900	15.0	2.2	1290	13900	1.1	1290	13900
	53	27.4	4.1	1290	13900	18.5	2.8	1290	13900	13.6	2.1	1290	13900	1.0	1290	13900
	54	26.9	3.9	1290	13900	18.2	2.6	1290	13900	13.4	1.9	1290	13900	1.0	1290	13900
	60	24.2	3.6	1290	13900	16.4	2.5	1290	13900	12.0	1.8	1290	13900	0.9	1290	13900
	67	21.7	3.2	1290	13900	14.7	2.2	1290	13900	10.8	1.6	1290	13900	0.8	1290	13900
	74	19.6	2.9	1290	13900	13.3	2.0	1290	13900	9.8	1.5	1290	13900	0.7	1290	13900
	80	18.2	2.7	1290	13900	12.3	1.8	1290	13900	9.0	1.4	1290	13900	0.7	1290	13900
	88	16.5	2.5	1290	13900	11.2	1.7	1290	13900	8.2	1.3	1290	13900	0.6	1290	13900
	93	15.6	2.3	1290	13900	10.6	1.6	1290	13900	7.8	1.1	1290	13900	0.6	1290	13900
	102	14.3	2.1	1290	13900	9.7	1.5	1290	13900	7.1	1.1	1290	13900	0.5	1290	13900
	112	13.0	1.9	1290	13900	8.8	1.3	1290	13900	6.5	1.0	1290	13900	0.5	1290	13900
	123	11.8	1.8	1290	13900	8.0	1.2	1290	13900	5.9	0.9	1290	13900	0.5	1290	13900
	138	10.6	1.5	1290	13900	7.1	1.0	1290	13900	5.3	0.8	1290	13900	0.4	1290	13900
	151	9.6	1.5	1290	13900	6.5	1.0	1290	13900	4.8	0.8	1290	13900	0.4	1290	13900
	163	8.9	1.3	1290	13900	6.1	0.9	1290	13900	4.5	0.7	1290	13900	0.4	1290	13900
	179	8.1	1.2	1290	13900	5.5	0.9	1290	13900	4.1	0.6	1290	13900	0.3	1290	13900
	189	7.7	1.1	1290	13900	5.2	0.8	1290	13900	3.9	0.6	1290	13900	0.3	1290	13900
	207	7.0	1.1	1290	13900	4.8	0.7	1290	13900	3.5	0.6	1290	13900	0.3	1290	13900
	227	6.4	0.9	1290	13900	4.4	0.6	1290	13900	3.2	0.5	1290	13900	0.3	1290	13900
	249	5.9	0.9	1290	13900	4.0	0.6	1290	13900	2.9	0.5	1290	13900	0.2	1290	13900
	278	5.3	0.8	1290	13900	3.6	0.5	1290	13900	2.6	0.4	1290	13900	0.2	1290	13900
	305	4.8	0.7	1290	13900	3.3	0.5	1290	13900	2.4	0.4	1290	13900	0.2	1290	13900

Selection Tables for Reducers (50Hz Input)

■ **IMPORTANT**: Please refer to page 144 for Reducer Selection Table notes.

Size	n1	1450				980				720				50		
	Ratio i	n2 [rpm]	P1 [kW]	Tout [Nm]	Pro [N]	n2 [rpm]	P1 [kW]	Tout [Nm]	Pro [N]	n2 [rpm]	P1 [kW]	Tout [Nm]	Pro [N]	n2 [rpm]	Tout [Nm]	Pro [N]
4A145 [Dimension Drawings from page 198]	11	131.9	18.3	1170	11900	89.1	13.7	1290	13500	65.5	10.0	1290	13900	4.6	1290	13900
	13	111.6	16.5	1280	12400	75.4	11.2	1290	13900	55.4	8.3	1290	13900	3.9	1290	13900
	14	103.6	15.2	1290	12900	70.0	10.3	1290	13900	51.5	7.6	1290	13900	3.6	1290	13900
	16	90.7	13.3	1290	13700	61.3	9.0	1290	13900	45.0	6.6	1290	13900	3.2	1290	13900
	18	80.6	12.1	1290	13900	54.5	8.2	1290	13900	40.0	6.1	1290	13900	2.8	1290	13900
	19	76.4	11.1	1290	13900	51.6	7.5	1290	13900	37.9	5.5	1290	13900	2.7	1290	13900
	21	69.1	10.1	1290	13900	46.7	6.9	1290	13900	34.3	5.1	1290	13900	2.4	1290	13900
	22	66.0	9.5	1290	13900	44.6	6.5	1290	13900	32.8	4.8	1290	13900	2.3	1290	13900
	25	58.0	8.7	1290	13900	39.2	5.9	1290	13900	28.8	4.4	1290	13900	2.0	1290	13900
	26	55.8	8.3	1290	13900	37.7	5.6	1290	13900	27.7	4.1	1290	13900	2.0	1290	13900
	28	51.8	7.6	1290	13900	35.0	5.2	1290	13900	25.8	3.8	1290	13900	1.8	1290	13900
	35	41.5	6.1	1290	13900	28.0	4.1	1290	13900	20.6	3.0	1290	13900	1.5	1290	13900
	39	37.2	5.6	1290	13900	25.2	3.8	1290	13900	18.5	2.8	1290	13900	1.3	1290	13900
	42	34.6	5.1	1290	13900	23.4	3.5	1290	13900	17.2	2.5	1290	13900	1.2	1290	13900
	46	31.6	4.7	1290	13900	21.3	3.2	1290	13900	15.7	2.4	1290	13900	1.1	1290	13900
	48	30.3	4.4	1290	13900	20.5	3.0	1290	13900	15.0	2.2	1290	13900	1.1	1290	13900
	53	27.4	4.1	1290	13900	18.5	2.8	1290	13900	13.6	2.1	1290	13900	1.0	1290	13900
	54	26.9	3.9	1290	13900	18.2	2.6	1290	13900	13.4	1.9	1290	13900	1.0	1290	13900
	60	24.2	3.6	1290	13900	16.4	2.5	1290	13900	12.0	1.8	1290	13900	0.9	1290	13900
	67	21.7	3.2	1290	13900	14.7	2.2	1290	13900	10.8	1.6	1290	13900	0.8	1290	13900
	74	19.6	2.9	1290	13900	13.3	2.0	1290	13900	9.8	1.5	1290	13900	0.7	1290	13900
	80	18.2	2.7	1290	13900	12.3	1.8	1290	13900	9.0	1.4	1290	13900	0.7	1290	13900
	88	16.5	2.5	1290	13900	11.2	1.7	1290	13900	8.2	1.3	1290	13900	0.6	1290	13900
	93	15.6	2.3	1290	13900	10.6	1.6	1290	13900	7.8	1.1	1290	13900	0.6	1290	13900
	102	14.3	2.1	1290	13900	9.7	1.5	1290	13900	7.1	1.1	1290	13900	0.5	1290	13900
	112	13.0	1.9	1290	13900	8.8	1.3	1290	13900	6.5	1.0	1290	13900	0.5	1290	13900
	123	11.8	1.8	1290	13900	8.0	1.2	1290	13900	5.9	0.9	1290	13900	0.5	1290	13900
	138	10.6	1.5	1290	13900	7.1	1.0	1290	13900	5.3	0.8	1290	13900	0.4	1290	13900
	151	9.6	1.5	1290	13900	6.5	1.0	1290	13900	4.8	0.8	1290	13900	0.4	1290	13900
	163	8.9	1.3	1290	13900	6.1	0.9	1290	13900	4.5	0.7	1290	13900	0.4	1290	13900
	179	8.1	1.2	1290	13900	5.5	0.9	1290	13900	4.1	0.6	1290	13900	0.3	1290	13900
	189	7.7	1.1	1290	13900	5.2	0.8	1290	13900	3.9	0.6	1290	13900	0.3	1290	13900
	207	7.0	1.1	1290	13900	4.8	0.7	1290	13900	3.5	0.6	1290	13900	0.3	1290	13900
	227	6.4	0.9	1290	13900	4.4	0.6	1290	13900	3.2	0.5	1290	13900	0.3	1290	13900
	249	5.9	0.9	1290	13900	4.0	0.6	1290	13900	2.9	0.5	1290	13900	0.2	1290	13900
	278	5.3	0.8	1290	13900	3.6	0.5	1290	13900	2.6	0.4	1290	13900	0.2	1290	13900
	305	4.8	0.7	1290	13900	3.3	0.5	1290	13900	2.4	0.4	1290	13900	0.2	1290	13900
4B120 [Dimension Drawings from page 198]	11	131.9	9.6	612	22000	89.1	9.6	906	23800	65.5	7.3	934	26300	4.6	934	42700
	13	111.6	9.6	746	22900	75.4	9.0	1030	24900	55.4	7.2	1130	27300	3.9	1140	41600
	14	103.6	9.6	816	23300	70.0	9.0	1120	25400	51.5	7.2	1230	27800	3.6	1250	41000
	16	90.7	9.6	933	23900	61.3	8.5	1220	26200	45.0	6.9	1330	28700	3.2	1420	39800
	18	80.6	9.6	1020	24300	54.5	8.5	1330	26600	40.0	6.9	1460	29100	2.8	1560	38800
	19	76.4	6.5	763	26200	51.6	6.4	1100	28400	37.9	4.9	1140	31500	2.7	1140	41600
	21	69.1	6.6	834	26700	46.7	6.4	1210	28900	34.3	4.9	1240	32000	2.4	1240	41000
	22	66.0	6.6	890	27000	44.6	6.0	1200	29600	32.8	4.7	1290	32500	2.3	1610	38300
	25	58.0	6.6	973	27500	39.2	6.0	1310	30100	28.8	4.7	1410	33100	2.0	1760	36900
	26	55.8	6.5	1020	27800	37.7	6.0	1370	30300	27.7	4.7	1480	33300	2.0	1630	38100
	28	51.8	6.6	1110	28200	35.0	6.0	1500	30700	25.8	4.8	1620	33800	1.8	1780	36700
	35	41.5	5.1	1080	30700	28.0	5.1	1600	32900	20.6	3.8	1630	36600	1.5	1630	38100
	39	37.2	5.1	1190	31200	25.2	5.1	1750	33400	18.5	3.8	1780	36700	1.3	1780	36700
	42	34.6	5.1	1280	31700	23.4	4.4	1630	34800	17.2	3.2	1630	38100	1.2	1630	38100
	46	31.6	5.1	1400	32200	21.3	4.4	1780	35300	15.7	3.2	1780	36700	1.1	1780	36700
	48	30.3	5.1	1480	32500	20.5	3.8	1630	36700	15.0	2.8	1630	38100	1.1	1630	38100
	53	27.4	5.1	1620	33000	18.5	3.8	1780	36700	13.6	2.8	1780	36700	1.0	1780	36700
	54	26.9	4.9	1620	33400	18.2	3.3	1610	38300	13.4	2.4	1620	38300	1.0	1620	38300
	60	24.2	4.9	1770	33800	16.4	3.3	1770	36900	12.0	2.5	1770	36900	0.9	1770	36900
	67	21.7	4.0	1610	36000	14.7	2.7	1620	38200	10.8	2.0	1620	38200	0.8	1620	38200
	74	19.6	4.0	1770	36500	13.3	2.7	1770	36800	9.8	2.0	1770	36800	0.7	1770	36800
	80	18.2	3.1	1500	38800	12.3	2.3	1630	38100	9.0	1.7	1630	38100	0.7	1630	38100
	88	16.5	3.1	1640	38000	11.2	2.3	1780	36700	8.2	1.7	1780	36700	0.6	1780	36700
	93	15.6	2.9	1620	38300	10.6	1.9	1620	38300	7.8	1.4	1610	38300	0.6	1620	38300
	102	14.3	2.9	1770	36900	9.7	2.0	1770	36900	7.1	1.5	1770	36900	0.5	1770	36900
	112	13.0	2.4	1610	38300	8.8	1.7	1630	38100	6.5	1.2	1630	38100	0.5	1630	38100
	123	11.8	2.4	1770	36900	8.0	1.7	1780	36700	5.9	1.2	1780	36700	0.5	1780	36700

Selection Tables for Reducers (50Hz Input)

■**IMPORTANT**: Please refer to page 144 for Reducer Selection Table notes.

Size	n1	1450				980				720				50		
	Ratio i	n2 [rpm]	P1 [kW]	Tout [Nm]	Pro [N]	n2 [rpm]	P1 [kW]	Tout [Nm]	Pro [N]	n2 [rpm]	P1 [kW]	Tout [Nm]	Pro [N]	n2 [rpm]	Tout [Nm]	Pro [N]
4B120 [Dimension Drawings from page 198]	138	10.6	1.9	1600	38400	7.1	1.32	1630	38100	5.3	1.0	1630	38100	0.4	1620	38100
	151	9.6	2.0	1750	37000	6.5	1.4	1780	36700	4.8	1.0	1780	36700	0.4	1780	36700
	163	8.9	1.6	1620	38300	6.1	1.1	1630	38100	4.5	0.8	1630	38100	0.4	1640	38100
	179	8.1	1.7	1770	36900	5.5	1.2	1780	36700	4.1	0.9	1780	36700	0.3	1780	36700
	189	7.7	1.3	1490	39200	5.2	1.0	1630	38100	3.9	0.7	1630	38100	0.3	1630	38100
	207	7.0	1.3	1640	38100	4.8	1.0	1780	36700	3.5	0.8	1780	36700	0.3	1780	36700
	227	6.4	1.0	1320	40500	4.4	0.8	1630	38100	3.2	0.6	1630	38100	0.3	1640	38100
	249	5.9	1.0	1440	39600	4.0	0.8	1780	36700	2.9	0.6	1780	36700	0.2	1780	36700
	278	5.3	0.9	1600	38400	3.6	0.7	1630	38100	2.6	0.5	1630	38100	0.2	1620	38100
	305	4.8	1.0	1750	37100	3.3	0.7	1780	36700	2.4	0.5	1780	36700	0.2	1780	36700
4B125 [Dimension Drawings from page 198]	11	131.9	11.0	701	21600	89.1	9.9	934	23700	65.5	7.3	934	26300	4.6	934	42700
	13	111.6	11.0	855	22400	75.4	9.0	1030	24900	55.4	7.2	1130	27300	3.9	1140	41600
	14	103.6	11.0	935	22800	70.0	9.0	1120	25400	51.5	7.2	1230	27800	3.6	1250	41000
	16	90.7	11.0	1070	23300	61.3	8.5	1220	26200	45.0	6.9	1330	28700	3.2	1420	39800
	18	80.6	11.0	1170	23700	54.5	8.5	1330	26600	40.0	6.9	1460	29100	2.8	1560	38800
	19	76.4	7.5	876	25700	51.6	6.4	1100	28400	37.9	4.9	1140	31500	2.7	1140	41600
	21	69.1	7.6	957	26200	46.7	6.4	1210	28900	34.3	4.9	1240	32000	2.4	1240	41000
	22	66.0	7.6	1020	26500	44.6	6.0	1200	29600	32.8	4.7	1290	32500	2.3	1610	38300
	25	58.0	7.6	1120	26900	39.2	6.0	1310	30100	28.8	4.7	1410	33100	2.0	1760	36900
	26	55.8	7.5	1170	27100	37.7	6.0	1370	30300	27.7	4.7	1480	33300	2.0	1780	36700
	28	51.8	7.6	1280	27500	35.0	6.0	1500	30700	25.8	4.8	1620	33800	1.8	1950	34900
	35	41.5	6.0	1270	29900	28.0	5.2	1640	32700	20.6	4.1	1760	36000	1.5	1930	35100
	39	37.2	6.0	1380	30400	25.2	5.2	1790	33200	18.5	4.1	1930	35200	1.3	2110	32900
	42	34.6	5.9	1500	30800	23.4	4.7	1750	34300	17.2	3.7	1880	35700	1.2	1960	34900
	46	31.6	6.0	1640	31200	21.3	4.7	1910	34800	15.7	3.7	2060	33700	1.1	2140	32600
	48	30.3	5.9	1730	31400	20.5	4.5	1960	34900	15.0	3.3	1950	34900	1.1	1950	34900
	53	27.4	6.0	1890	31800	18.5	4.6	2140	32600	13.6	3.4	2140	32600	1.0	2140	32600
	54	26.9	5.7	1870	32300	18.2	4.0	1960	34900	13.4	2.9	1960	34900	1.0	1950	34900
	60	24.2	5.7	2040	32700	16.4	4.0	2140	32600	12.0	3.0	2140	32600	0.9	2140	32600
	67	21.7	4.8	1960	34500	14.7	3.3	1960	34900	10.8	2.4	1960	34900	0.8	1960	34900
	74	19.6	4.8	2140	32600	13.3	3.3	2140	32600	9.8	2.4	2140	32600	0.7	2140	32600
	80	18.2	4.0	1920	35300	12.3	2.8	1960	34900	9.0	2.0	1960	34900	0.7	1960	34900
	88	16.5	4.0	2100	33100	11.2	2.8	2140	32600	8.2	2.0	2140	32600	0.6	2140	32600
	93	15.6	3.5	1960	34900	10.6	2.4	1960	34900	7.8	1.7	1950	34900	0.6	1960	34900
	102	14.3	3.5	2140	32600	9.7	2.4	2140	32600	7.1	1.8	2140	32600	0.5	2140	32600
	112	13.0	2.9	1960	34900	8.8	2.0	1960	34900	6.5	1.5	1960	34900	0.5	1960	34900
	123	11.8	2.9	2140	32600	8.0	2.0	2140	32600	5.9	1.5	2140	32600	0.5	2140	32600
	138	10.6	2.3	1960	34900	7.1	1.6	1950	34900	5.3	1.1	1950	34900	0.4	1960	34900
	151	9.6	2.4	2140	32600	6.5	1.6	2140	32600	4.8	1.2	2140	32600	0.4	2140	32600
	163	8.9	2.0	1950	34900	6.1	1.3	1950	34900	4.5	1.0	1960	34900	0.4	1950	34900
	179	8.1	2.0	2140	32600	5.5	1.4	2140	32600	4.1	1.0	2140	32600	0.3	2140	32600
	189	7.7	1.6	1860	36000	5.2	1.2	1950	34900	3.9	0.8	1960	34900	0.3	1960	34900
	207	7.0	1.7	2030	34000	4.8	1.2	2140	32600	3.5	0.9	2140	32600	0.3	2140	32600
	227	6.4	1.1	1570	38600	4.4	0.8	1720	37300	3.2	0.7	1840	36200	0.3	1840	36200
	249	5.9	1.2	1720	37300	4.0	0.9	1880	35700	2.9	0.7	2010	34200	0.2	2010	34200
	278	5.3	1.0	1740	37200	3.6	0.8	1900	35500	2.6	0.6	1960	34900	0.2	1960	34900
	305	4.8	1.1	1900	35500	3.3	0.8	2080	33400	2.4	0.6	2140	32600	0.2	2140	32600
4B140 [Dimension Drawings from page 198]	11	131.9	19.0	1210	19400	89.1	15.5	1460	21400	65.5	11.4	1460	24100	4.6	1460	39500
	13	111.6	19.0	1480	19800	75.4	15.5	1780	21700	55.4	11.4	1780	24500	3.9	1780	36700
	14	103.6	19.0	1620	19900	70.0	15.5	1950	21800	51.5	11.4	1950	24800	3.6	1950	34900
	16	90.7	19.0	1850	20000	61.3	15.5	2230	21800	45.0	11.4	2230	24900	3.2	2230	31400
	18	80.6	19.0	2020	20100	54.5	15.5	2440	21900	40.0	11.4	2440	25000	2.8	2440	28000
	19	76.4	13.0	1520	23000	51.6	12.2	2100	24200	37.9	9.5	2230	26900	2.7	2230	31400
	21	69.1	13.0	1660	23200	46.7	12.2	2300	24200	34.3	9.5	2440	27000	2.4	2440	28000
	22	66.0	13.0	1770	23300	44.6	12.8	2570	23700	32.8	9.4	2570	25400	2.3	2570	25400
	25	58.0	13.0	1940	23400	39.2	11.7	2570	24700	28.8	8.6	2570	25400	2.0	2570	25400
	26	55.8	13.0	2020	23500	37.7	11.2	2570	25200	27.7	8.2	2570	25400	2.0	2570	25400
	28	51.8	13.0	2210	23600	35.0	10.2	2570	25400	25.8	7.6	2570	25400	1.8	2570	25400
	35	41.5	12.0	2570	24300	28.0	8.2	2570	25400	20.6	6.0	2570	25400	1.5	2570	25400
	39	37.2	11.0	2570	25400	25.2	7.5	2570	25400	18.5	5.5	2570	25400	1.3	2570	25400
	42	34.6	10.2	2570	25400	23.4	6.9	2570	25400	17.2	5.1	2570	25400	1.2	2570	25400
	46	31.6	9.3	2570	25400	21.3	6.3	2570	25400	15.7	4.7	2570	25400	1.1	2570	25400

Selection Tables for Reducers (50Hz Input)

■ **IMPORTANT**: Please refer to page 144 for Reducer Selection Table notes.

Size	n1	1450				980				720				50		
	Ratio i	n2 [rpm]	P1 [kW]	Tout [Nm]	Pro [N]	n2 [rpm]	P1 [kW]	Tout [Nm]	Pro [N]	n2 [rpm]	P1 [kW]	Tout [Nm]	Pro [N]	n2 [rpm]	Tout [Nm]	Pro [N]
4B140 [Dimension Drawings from page 198]	48	30.3	8.8	2570	25400	20.5	6.0	2570	25400	15.0	4.4	2570	25400	1.1	2570	25400
	53	27.4	8.1	2570	25400	18.5	5.5	2570	25400	13.6	4.0	2570	25400	1.0	2570	25400
	54	26.9	7.8	2570	25400	18.2	5.3	2570	25400	13.4	3.9	2570	25400	1.0	2570	25400
	60	24.2	7.2	2570	25400	16.4	4.9	2570	25400	12.0	3.6	2570	25400	0.9	2570	25400
	67	21.7	6.3	2570	25400	14.7	4.3	2570	25400	10.8	3.2	2570	25400	0.8	2570	25400
	74	19.6	5.8	2570	25400	13.3	3.9	2570	25400	9.8	2.9	2570	25400	0.7	2570	25400
	80	18.2	5.3	2570	25400	12.3	3.6	2570	25400	9.0	2.7	2570	25400	0.7	2570	25400
	88	16.5	4.9	2570	25400	11.2	3.3	2570	25400	8.2	2.4	2570	25400	0.6	2570	25400
	93	15.6	4.6	2570	25400	10.6	3.1	2570	25400	7.8	2.3	2570	25400	0.6	2570	25400
	102	14.3	4.2	2570	25400	9.7	2.9	2570	25400	7.1	2.1	2570	25400	0.5	2570	25400
	112	13.0	3.8	2570	25400	8.8	2.6	2570	25400	6.5	1.9	2570	25400	0.5	2570	25400
	123	11.8	3.5	2570	25400	8.0	2.4	2570	25400	5.9	1.8	2570	25400	0.5	2570	25400
	138	10.6	3.1	2570	25400	7.1	2.1	2570	25400	5.3	1.5	2570	25400	0.4	2570	25400
	151	9.6	2.9	2570	25400	6.5	1.9	2570	25400	4.8	1.4	2570	25400	0.4	2570	25400
	163	8.9	2.6	2570	25400	6.1	1.8	2570	25400	4.5	1.3	2570	25400	0.4	2570	25400
	179	8.1	2.4	2570	25400	5.5	1.6	2570	25400	4.1	1.2	2570	25400	0.3	2570	25400
	189	7.7	2.2	2570	25400	5.2	1.5	2570	25400	3.9	1.1	2570	25400	0.3	2570	25400
	207	7.0	2.1	2570	25400	4.8	1.4	2570	25400	3.5	1.1	2570	25400	0.3	2570	25400
	227	6.4	1.9	2570	25400	4.4	1.3	2570	25400	3.2	0.9	2570	25400	0.3	2570	25400
	249	5.9	1.7	2570	25400	4.0	1.2	2570	25400	2.9	0.9	2570	25400	0.2	2570	25400
	278	5.3	1.5	2570	25400	3.6	1.0	2570	25400	2.6	0.8	2570	25400	0.2	2570	25400
	305	4.8	1.4	2570	25400	3.3	1.0	2570	25400	2.4	0.7	2570	25400	0.2	2570	25400
4B145 [Dimension Drawings from page 198]	11	131.9	22.0	1400	18600	89.1	15.5	1460	21400	65.5	11.4	1460	24100	4.6	1460	39500
	13	111.6	22.0	1710	18800	75.4	15.5	1780	21700	55.4	11.4	1780	24500	3.9	1780	36700
	14	103.6	22.0	1870	18800	70.0	15.5	1950	21800	51.5	11.4	1950	24800	3.6	1950	34900
	16	90.7	22.0	2140	18700	61.3	15.5	2230	21800	45.0	11.4	2230	24900	3.2	2230	31400
	18	80.6	22.0	2340	18700	54.5	15.5	2440	21900	40.0	11.4	2440	25000	2.8	2440	28000
	19	76.4	15.1	1760	21900	51.6	12.2	2100	24200	37.9	9.5	2230	26900	2.7	2330	31400
	21	69.1	15.1	1930	22000	46.7	12.2	2300	24200	34.3	9.5	2440	27000	2.4	2440	28000
	22	66.0	15.1	2060	22000	44.6	12.8	2570	23700	32.8	9.4	2570	25400	2.3	2570	25400
	25	58.0	15.1	2250	22100	39.2	11.7	2570	24700	28.8	8.6	2570	25400	2.0	2570	25400
	26	55.8	15.1	2350	22100	37.7	11.2	2570	25200	27.7	8.2	2570	25400	2.0	2570	25400
	28	51.8	15.1	2570	22100	35.0	10.2	2570	25400	25.8	7.6	2570	25400	1.8	2570	25400
	35	41.5	12.0	2570	24300	28.0	8.2	2570	25400	20.6	6.0	2570	25400	1.5	2570	25400
	39	37.2	11.0	2570	25400	25.2	7.5	2570	25400	18.5	5.5	2570	25400	1.3	2570	25400
	42	34.6	10.0	2570	25400	23.4	7.0	2570	25400	17.2	5.0	2570	25400	1.2	2570	25400
	46	31.6	9.3	2570	25400	21.3	6.3	2570	25400	15.7	4.7	2570	25400	1.1	2570	25400
	48	30.3	8.8	2570	25400	20.5	6.0	2570	25400	15.0	4.4	2570	25400	1.1	2570	25400
	53	27.4	8.1	2570	25400	18.5	5.5	2570	25400	13.6	4.0	2570	25400	1.0	2570	25400
	54	26.9	7.8	2570	25400	18.2	5.3	2570	25400	13.4	3.9	2570	25400	1.0	2570	25400
	60	24.2	7.2	2570	25400	16.4	4.9	2570	25400	12.0	3.6	2570	25400	0.9	2570	25400
	67	21.7	6.3	2570	25400	14.7	4.3	2570	25400	10.8	3.2	2570	25400	0.8	2570	25400
	74	19.6	5.8	2570	25400	13.3	3.9	2570	25400	9.8	2.9	2570	25400	0.7	2570	25400
	80	18.2	5.3	2570	25400	12.3	3.6	2570	25400	9.0	2.7	2570	25400	0.7	2570	25400
	88	16.5	4.9	2570	25400	11.2	3.3	2570	25400	8.2	2.4	2570	25400	0.6	2570	25400
	93	15.6	4.6	2570	25400	10.6	3.1	2570	25400	7.8	2.3	2570	25400	0.6	2570	25400
	102	14.3	4.2	2570	25400	9.7	2.9	2570	25400	7.1	2.1	2570	25400	0.5	2570	25400
	112	13.0	3.8	2570	25400	8.8	2.6	2570	25400	6.5	1.9	2570	25400	0.5	2570	25400
	123	11.8	3.5	2570	25400	8.0	2.4	2570	25400	5.9	1.8	2570	25400	0.5	2570	25400
	138	10.6	3.1	2570	25400	7.1	2.1	2570	25400	5.3	1.5	2570	25400	0.4	2570	25400
	151	9.6	2.9	2570	25400	6.5	1.9	2570	25400	4.8	1.4	2570	25400	0.4	2570	25400
	163	8.9	2.6	2570	25400	6.1	1.8	2570	25400	4.5	1.3	2570	25400	0.4	2570	25400
	179	8.1	2.4	2570	25400	5.5	1.6	2570	25400	4.1	1.2	2570	25400	0.3	2570	25400
	189	7.7	2.2	2570	25400	5.2	1.5	2570	25400	3.9	1.1	2570	25400	0.3	2570	25400
	207	7.0	2.1	2570	25400	4.8	1.4	2570	25400	3.5	1.1	2570	25400	0.3	2570	25400
	227	6.4	1.9	2570	25400	4.4	1.3	2570	25400	3.2	0.9	2570	25400	0.3	2570	25400
	249	5.9	1.7	2570	25400	4.0	1.2	2570	25400	2.9	0.9	2570	25400	0.2	2570	25400
	278	5.3	1.5	2570	25400	3.6	1.0	2570	25400	2.6	0.8	2570	25400	0.2	2570	25400
	305	4.8	1.4	2570	25400	3.3	1.0	2570	25400	2.4	0.7	2570	25400	0.2	2570	25400

Selection Tables for Reducers (50Hz Input)

■**IMPORTANT**: Please refer to page 144 for Reducer Selection Table notes.

Size	n1	1450				980				720				50		
	Ratio i	n2 [rpm]	P1 [kW]	Tout [Nm]	Pro [N]	n2 [rpm]	P1 [kW]	Tout [Nm]	Pro [N]	n2 [rpm]	P1 [kW]	Tout [Nm]	Pro [N]	n2 [rpm]	Tout [Nm]	Pro [N]
4B160 [Dimension Drawings from page 198]	11	131.9	25.3	1610	17700	89.1	19.6	1850	19800	65.5	14.4	1850	22500	4.6	1850	36000
	13	111.6	25.3	1970	17700	75.4	19.6	2250	19700	55.4	14.4	2250	22500	3.9	2250	31000
	14	103.6	25.3	2150	17600	70.0	19.6	2470	19700	51.5	14.4	2470	22600	3.6	2470	27500
	16	90.7	24.8	2410	17600	61.3	17.9	2570	20400	45.0	13.1	2570	23400	3.2	2570	25400
	18	80.6	23.6	2510	18000	54.5	16.3	2570	21300	40.0	12.0	2570	24400	2.8	2570	25400
	19	76.4	22.0	2570	18500	51.6	14.9	2570	22200	37.9	10.9	2570	25400	2.7	2570	25400
	21	69.1	20.2	2570	19300	46.7	13.6	2570	23100	34.3	10.0	2570	25400	2.4	2570	25400
	22	66.0	18.9	2570	19800	44.6	12.8	2570	23700	32.8	9.4	2570	25400	2.3	2570	25400
	25	58.0	17.3	2570	20800	39.2	11.7	2570	24700	28.8	8.6	2570	25400	2.0	2570	25400
	26	55.8	16.5	2570	21200	37.7	11.2	2570	25200	27.7	8.2	2570	25400	2.0	2570	25400
	28	51.8	15.1	2570	22100	35.0	10.2	2570	25400	25.8	7.6	2570	25400	1.8	2570	25400
	35	41.5	12.0	2570	24300	28.0	8.2	2570	25400	20.6	6.0	2570	25400	1.5	2570	25400
	39	37.2	11.0	2570	25400	25.2	7.5	2570	25400	18.5	5.5	2570	25400	1.3	2570	25400
	42	34.6	10.2	2570	25400	23.4	6.9	2570	25400	17.2	5.1	2570	25400	1.2	2570	25400
	46	31.6	9.3	2570	25400	21.3	6.3	2570	25400	15.7	4.7	2570	25400	1.1	2570	25400
	48	30.3	8.8	2570	25400	20.5	6.0	2570	25400	15.0	4.4	2570	25400	1.1	2570	25400
	53	27.4	8.1	2570	25400	18.5	5.5	2570	25400	13.6	4.0	2570	25400	1.0	2570	25400
	54	26.9	7.8	2570	25400	18.2	5.3	2570	25400	13.4	3.9	2570	25400	1.0	2570	25400
	60	24.2	7.2	2570	25400	16.4	4.9	2570	25400	12.0	3.6	2570	25400	0.9	2570	25400
	67	21.7	6.3	2570	25400	14.7	4.3	2570	25400	10.8	3.2	2570	25400	0.8	2570	25400
	74	19.6	5.8	2570	25400	13.3	3.9	2570	25400	9.8	2.9	2570	25400	0.7	2570	25400
	80	18.2	5.3	2570	25400	12.3	3.6	2570	25400	9.0	2.7	2570	25400	0.7	2570	25400
	88	16.5	4.9	2570	25400	11.2	3.3	2570	25400	8.2	2.4	2570	25400	0.6	2570	25400
	93	15.6	4.6	2570	25400	10.6	3.1	2570	25400	7.8	2.3	2570	25400	0.6	2570	25400
	102	14.3	4.2	2570	25400	9.7	2.9	2570	25400	7.1	2.1	2570	25400	0.5	2570	25400
	112	13.0	3.8	2570	25400	8.8	2.6	2570	25400	6.5	1.9	2570	25400	0.5	2570	25400
	123	11.8	3.5	2570	25400	8.0	2.4	2570	25400	5.9	1.8	2570	25400	0.5	2570	25400
	138	10.6	3.1	2570	25400	7.1	2.1	2570	25400	5.3	1.5	2570	25400	0.4	2570	25400
	151	9.6	2.9	2570	25400	6.5	1.9	2570	25400	4.8	1.4	2570	25400	0.4	2570	25400
	163	8.9	2.6	2570	25400	6.1	1.8	2570	25400	4.5	1.3	2570	25400	0.4	2570	25400
	179	8.1	2.4	2570	25400	5.5	1.6	2570	25400	4.1	1.2	2570	25400	0.3	2570	25400
	189	7.7	2.2	2570	25400	5.2	1.5	2570	25400	3.9	1.1	2570	25400	0.3	2570	25400
	207	7.0	2.1	2570	25400	4.8	1.4	2570	25400	3.5	1.1	2570	25400	0.3	2570	25400
	227	6.4	1.9	2570	25400	4.4	1.3	2570	25400	3.2	0.9	2570	25400	0.3	2570	25400
	249	5.9	1.7	2570	25400	4.0	1.2	2570	25400	2.9	0.9	2570	25400	0.2	2570	25400
	278	5.3	1.5	2570	25400	3.6	1.0	2570	25400	2.6	0.8	2570	25400	0.2	2570	25400
	305	4.8	1.4	2570	25400	3.3	1.0	2570	25400	2.4	0.7	2570	25400	0.2	2570	25400
4B165 [Dimension Drawings from page 198]	11	131.9	29.0	1850	16700	89.1	19.6	1850	19800	65.5	14.4	1850	22500	4.6	1850	36000
	13	111.6	29.0	2250	16400	75.4	19.6	2250	19700	55.4	14.4	2250	22500	3.9	2250	31000
	14	103.6	27.9	2380	16700	70.0	19.6	2470	19700	51.5	14.4	2470	22600	3.6	2470	27500
	16	90.7	24.8	2410	17600	61.3	17.9	2570	20400	45.0	13.1	2570	23400	3.2	2570	25400
	18	80.6	23.6	2510	18000	54.5	16.3	2570	21300	40.0	12.0	2570	24400	2.8	2570	25400
	19	76.4	22.0	2570	18500	51.6	14.9	2570	22200	37.9	10.9	2570	25400	2.7	2570	25400
	21	69.1	20.2	2570	19300	46.7	13.6	2570	23100	34.3	10.0	2570	25400	2.4	2570	25400
	22	66.0	18.9	2570	19800	44.6	12.8	2570	23700	32.8	9.4	2570	25400	2.3	2570	25400
	25	58.0	17.3	2570	20800	39.2	11.7	2570	24700	28.8	8.6	2570	25400	2.0	2570	25400
	26	55.8	16.5	2570	21200	37.7	11.2	2570	25200	27.7	8.2	2570	25400	2.0	2570	25400
	28	51.8	15.1	2570	22100	35.0	10.2	2570	25400	25.8	7.6	2570	25400	1.8	2570	25400
	35	41.5	12.0	2570	24300	28.0	8.2	2570	25400	20.6	6.0	2570	25400	1.5	2570	25400
	39	37.2	11.0	2570	25400	25.2	7.5	2570	25400	18.5	5.5	2570	25400	1.3	2570	25400
	42	34.6	10.2	2570	25400	23.4	6.9	2570	25400	17.2	5.1	2570	25400	1.2	2570	25400
	46	31.6	9.3	2570	25400	21.3	6.3	2570	25400	15.7	4.7	2570	25400	1.1	2570	25400
	48	30.3	8.8	2570	25400	20.5	6.0	2570	25400	15.0	4.4	2570	25400	1.1	2570	25400
	53	27.4	8.1	2570	25400	18.5	5.5	2570	25400	13.6	4.0	2570	25400	1.0	2570	25400
	54	26.9	7.8	2570	25400	18.2	5.3	2570	25400	13.4	3.9	2570	25400	1.0	2570	25400
	60	24.2	7.2	2570	25400	16.4	4.9	2570	25400	12.0	3.6	2570	25400	0.9	2570	25400
	67	21.7	6.3	2570	25400	14.7	4.3	2570	25400	10.8	3.2	2570	25400	0.8	2570	25400
	74	19.6	5.8	2570	25400	13.3	3.9	2570	25400	9.8	2.9	2570	25400	0.7	2570	25400
	80	18.2	5.3	2570	25400	12.3	3.6	2570	25400	9.0	2.7	2570	25400	0.7	2570	25400
	88	16.5	4.9	2570	25400	11.2	3.3	2570	25400	8.2	2.4	2570	25400	0.6	2570	25400
	93	15.6	4.6	2570	25400	10.6	3.1	2570	25400	7.8	2.3	2570	25400	0.6	2570	25400
	102	14.3	4.2	2570	25400	9.7	2.9	2570	25400	7.1	2.1	2570	25400	0.5	2570	25400
	112	13.0	3.8	2570	25400	8.8	2.6	2570	25400	6.5	1.9	2570	25400	0.5	2570	25400
	123	11.8	3.5	2570	25400	8.0	2.4	2570	25400	5.9	1.8	2570	25400	0.5	2570	25400
	138	10.6	3.1	2570	25400	7.1	2.1	2570	25400	5.3	1.5	2570	25400	0.4	2570	25400

Selection Tables for Reducers (50Hz Input)

■ **IMPORTANT**: Please refer to page 144 for Reducer Selection Table notes.

Size	n1	1450				980				720				50		
	Ratio i	n2 [rpm]	P1 [kW]	Tout [Nm]	Pro [N]	n2 [rpm]	P1 [kW]	Tout [Nm]	Pro [N]	n2 [rpm]	P1 [kW]	Tout [Nm]	Pro [N]	n2 [rpm]	Tout [Nm]	Pro [N]
4B165 [Dimension Drawings from page 198]	151	9.6	2.9	2570	25400	6.5	1.9	2570	25400	4.8	1.4	2570	25400	0.4	2570	25400
	163	8.9	2.6	2570	25400	6.1	1.8	2570	25400	4.5	1.3	2570	25400	0.4	2570	25400
	179	8.1	2.4	2570	25400	5.5	1.6	2570	25400	4.1	1.2	2570	25400	0.3	2570	25400
	189	7.7	2.2	2570	25400	5.2	1.5	2570	25400	3.9	1.1	2570	25400	0.3	2570	25400
	207	7.0	2.1	2570	25400	4.8	1.4	2570	25400	3.5	1.1	2570	25400	0.3	2570	25400
	227	6.4	1.9	2570	25400	4.4	1.3	2570	25400	3.2	0.9	2570	25400	0.3	2570	25400
	249	5.9	1.7	2570	25400	4.0	1.2	2570	25400	2.9	0.9	2570	25400	0.2	2570	25400
	278	5.3	1.5	2570	25400	3.6	1.0	2570	25400	2.6	0.8	2570	25400	0.2	2570	25400
	305	4.8	1.4	2570	25400	3.3	1.0	2570	25400	2.4	0.7	2570	25400	0.2	2570	25400
4C140 [Dimension Drawings from page 198]	11	131.9	19.0	1210	29200	89.1	15.5	1460	32500	65.5	11.4	1460	36200	4.6	1460	69900
	13	111.6	19.0	1480	30300	75.4	15.5	1780	33600	55.4	11.4	1780	37500	3.9	1780	68900
	14	103.6	19.0	1620	30800	70.0	15.5	1950	34100	51.5	11.4	1950	38100	3.6	1950	68300
	16	90.7	19.0	1850	31400	61.3	15.5	2230	34700	45.0	11.4	2230	38900	3.2	2230	67200
	18	80.6	19.0	2020	31800	54.5	15.5	2440	35200	40.0	11.4	2440	39500	2.8	2440	66300
	19	76.4	13.0	1520	34800	51.6	12.2	2100	37600	37.9	9.5	2230	41600	2.7	2230	67200
	21	69.1	13.0	1660	35400	46.7	12.2	2300	38200	34.3	9.5	2440	42200	2.4	2440	66300
	22	66.0	13.0	1770	35700	44.6	13.0	2620	37800	32.8	10.6	2910	41400	2.3	3120	62500
	25	58.0	13.0	1940	36300	39.2	13.0	2860	38300	28.8	10.6	3180	41800	2.0	3410	60500
	26	55.8	13.0	2020	36600	37.7	11.6	2670	39600	27.7	9.2	2880	43700	2.0	3570	59300
	28	51.8	13.0	2210	37100	35.0	11.6	2930	40000	25.8	9.2	3150	44200	1.8	3900	56600
	35	41.5	13.0	2780	38100	28.0	12.0	3800	40300	20.6	8.9	3800	45600	1.5	3800	57400
	39	37.2	13.0	3040	38500	25.2	12.0	4160	40600	18.5	8.9	4160	46000	1.3	4160	54100
	42	34.6	13.0	3280	38800	23.4	10.2	3810	43200	17.2	7.5	3810	48800	1.2	3800	57400
	46	31.6	13.0	3600	39000	21.3	10.2	4160	43400	15.7	7.5	4160	49200	1.1	4160	54100
	48	30.3	12.0	3500	40200	20.5	8.8	3800	45700	15.0	6.5	3800	51500	1.1	3800	57400
	53	27.4	12.0	3830	40500	18.5	8.9	4160	46000	13.6	6.5	4160	52000	1.0	4160	54100
	54	26.9	10.1	3340	42900	18.2	7.8	3800	48000	13.4	5.7	3810	54000	1.0	3800	57400
	60	24.2	10.1	3640	43200	16.4	7.8	4160	48400	12.0	5.8	4160	54100	0.9	4160	54100
	67	21.7	8.7	3540	45600	14.7	6.3	3800	52000	10.8	4.7	3800	57400	0.8	3800	57400
	74	19.6	8.7	3870	46100	13.3	6.3	4160	52600	9.8	4.7	4160	54100	0.7	4160	54100
	80	18.2	6.9	3350	49500	12.3	5.3	3800	55500	9.0	3.9	3800	57400	0.7	3800	57400
	88	16.5	6.9	3660	50100	11.2	5.3	4160	54100	8.2	3.9	4160	54100	0.6	4160	54100
	93	15.6	6.0	3350	52400	10.6	4.6	3800	57400	7.8	3.4	3800	57400	0.6	3810	57400
	102	14.3	6.0	3670	53000	9.7	4.6	4160	54100	7.1	3.4	4160	54100	0.5	4160	54100
	112	13.0	5.3	3540	55400	8.8	3.8	3800	57400	6.5	2.8	3800	57400	0.5	3800	57400
	123	11.8	5.3	3870	56100	8.0	3.8	4160	54100	5.9	2.8	4160	54100	0.5	4160	54100
	138	10.6	3.9	3290	60800	7.1	3.1	3810	57400	5.3	2.3	3800	57400	0.4	3800	57400
	151	9.6	4.0	3600	59000	6.5	3.1	4160	54100	4.8	2.3	4160	54100	0.4	4160	54100
	163	8.9	3.4	3400	60600	6.1	2.6	3800	57400	4.5	1.9	3810	57400	0.4	3790	57400
	179	8.1	3.5	3720	58100	5.5	2.6	4160	54100	4.1	2.0	4160	54100	0.3	4160	54100
	189	7.7	3.0	3390	60600	5.2	2.2	3800	57400	3.9	1.7	3810	57400	0.3	3790	57400
	207	7.0	3.0	3710	58200	4.8	2.3	4160	54100	3.5	1.7	4160	54100	0.3	4160	54100
	227	6.4	2.4	3350	60900	4.4	1.9	3800	57400	3.2	1.4	3810	57400	0.3	3800	57400
	249	5.9	2.5	3670	58500	4.0	1.9	4160	54100	2.9	1.4	4160	54100	0.2	4160	54100
	278	5.3	2.0	3350	61000	3.6	1.5	3800	57400	2.6	1.12	3810	57400	0.2	3820	57400
	305	4.8	2.0	3660	58600	3.3	1.6	4160	54100	2.4	1.2	4160	54100	0.2	4160	54100
4C145 [Dimension Drawings from page 198]	11	131.9	22.0	1400	28500	89.1	15.5	1460	32500	65.5	11.4	1460	36200	4.6	1460	69900
	13	111.6	22.0	1710	29400	75.4	15.5	1780	33600	55.4	11.4	1780	37500	3.9	1780	68900
	14	103.6	22.0	1870	29800	70.0	15.5	1950	34100	51.5	11.4	1950	38100	3.6	1950	68300
	16	90.7	22.0	2140	30300	61.3	15.5	2230	34700	45.0	11.4	2230	38900	3.2	2230	67200
	18	80.6	22.0	2340	30600	54.5	15.5	2440	35200	40.0	11.4	2440	39500	2.8	2440	66300
	19	76.4	15.1	1760	33900	51.6	12.2	2100	37600	37.9	9.5	2230	41600	2.7	2230	67200
	21	69.1	15.1	1930	34400	46.7	12.2	2300	38200	34.3	9.5	2440	42200	2.4	2440	66300
	22	66.0	15.1	2060	34600	44.6	13.4	2710	37500	32.8	10.6	2910	41400	2.3	3120	62500
	25	58.0	15.1	2250	35100	39.2	13.4	2960	37900	28.8	10.6	3180	41800	2.0	3410	60500
	26	55.8	15.1	2350	35300	37.7	11.6	2670	39600	27.7	9.2	2880	43700	2.0	3570	59300
	28	51.8	15.1	2580	35700	35.0	11.6	2930	40000	25.8	9.2	3150	44200	1.8	3900	56600
	35	41.5	15.1	3240	36400	28.0	12.1	3810	40300	20.6	9.4	4010	44800	1.5	4010	55500
	39	37.2	15.1	3540	36700	25.2	12.1	4170	40500	18.5	9.4	4390	45100	1.3	4390	51800
	42	34.6	15.1	3810	36800	23.4	11.4	4260	41500	17.2	8.4	4250	47100	1.2	4260	53200
	46	31.6	15.1	4160	36900	21.3	11.4	4650	41600	15.7	8.4	4650	47300	1.1	4650	48700
	48	30.3	14.5	4230	37500	20.5	9.8	4220	44200	15.0	7.2	4210	50000	1.1	4220	53600

Selection Tables for Reducers (50Hz Input)

■ **IMPORTANT**: Please refer to page 144 for Reducer Selection Table notes.

Size	n1	1450				980				720				50		
	Ratio i	n2 [rpm]	P1 [kW]	Tout [Nm]	Pro [N]	n2 [rpm]	P1 [kW]	Tout [Nm]	Pro [N]	n2 [rpm]	P1 [kW]	Tout [Nm]	Pro [N]	n2 [rpm]	Tout [Nm]	Pro [N]
4C145 [Dimension Drawings from page 198]	53	27.4	14.5	4610	37500	18.5	9.8	4610	44300	13.6	7.2	4610	49200	1.0	4610	49200
	54	26.9	12.0	3960	40500	18.2	8.7	4260	46300	13.4	6.4	4260	52300	1.0	4250	53200
	60	24.2	12.0	4340	40600	16.4	8.7	4650	46600	12.0	6.4	4650	48700	0.9	4650	48700
	67	21.7	9.5	3870	44400	14.7	6.9	4160	50700	10.8	5.1	4160	54200	0.8	4160	54200
	74	19.6	9.5	4230	44700	13.3	6.9	4550	50000	9.8	5.1	4550	50000	0.7	4550	50000
	80	18.2	8.0	3840	47700	12.3	6.0	4250	53200	9.0	4.4	4250	53200	0.7	4250	53200
	88	16.5	8.0	4200	48100	11.2	6.0	4650	48700	8.2	4.4	4650	48700	0.6	4650	48700
	93	15.6	7.5	4240	49100	10.6	5.1	4250	53200	7.8	3.8	4260	53200	0.6	4250	53200
	102	14.3	7.6	4640	48800	9.7	5.1	4650	48700	7.1	3.8	4650	48700	0.5	4650	48700
	112	13.0	6.3	4250	52700	8.8	4.3	4250	53200	6.5	3.2	4250	53200	0.5	4250	53200
	123	11.8	6.3	4650	48700	8.0	4.3	4650	48700	5.9	3.2	4650	48700	0.5	4650	48700
	138	10.6	4.7	3900	56500	7.1	3.4	4250	53200	5.3	2.5	4260	53200	0.4	4260	53200
	151	9.6	4.7	4270	53000	6.5	3.5	4650	48700	4.8	2.6	4650	48700	0.4	4650	48700
	163	8.9	3.7	3670	58500	6.1	2.7	4020	55500	4.5	2.1	4250	53200	0.4	4250	53200
	179	8.1	3.7	4010	55600	5.5	2.8	4400	51700	4.1	2.2	4650	48700	0.3	4650	48700
	189	7.7	3.2	3650	58700	5.2	2.4	4000	55700	3.9	1.8	4250	53200	0.3	4260	53200
	207	7.0	3.2	3990	55800	4.8	2.4	4380	51900	3.5	1.9	4650	48700	0.3	4650	48700
	227	6.4	2.6	3610	58900	4.4	1.9	3960	56000	3.2	1.5	4110	54600	0.3	4120	54600
	249	5.9	2.7	3960	56100	4.0	2.0	4340	52300	2.9	1.5	4500	50600	0.2	4500	50600
	278	5.3	2.2	3650	58700	3.6	1.6	3880	56800	2.6	1.1	3880	56800	0.2	3870	56800
	305	4.8	2.2	3990	55800	3.3	1.6	4240	53300	2.4	1.2	4240	53300	0.2	4240	53300
4C160 [Dimension Drawings from page 198]	11	131.9	25.3	1610	27800	89.1	25.3	2390	29100	65.5	25.3	3250	29500	4.6	3260	61500
	13	111.6	25.3	1970	28400	75.4	25.3	2910	29400	55.4	25.3	3960	29300	3.9	3980	55900
	14	103.6	25.3	2150	28800	70.0	25.3	3180	29500	51.5	25.3	4330	29300	3.6	4350	52200
	16	90.7	25.3	2460	29100	61.3	25.3	3640	29400	45.0	24.6	4820	29200	3.2	4970	44500
	18	80.6	25.3	2690	29300	54.5	25.3	3980	29400	40.0	24.0	5140	29400	2.8	5140	41900
	19	76.4	25.3	2950	29500	51.6	23.8	4110	30200	37.9	17.5	4110	34600	2.7	4130	54600
	21	69.1	25.3	3230	29500	46.7	23.8	4500	30000	34.3	17.5	4500	34500	2.4	4500	50500
	22	66.0	20.3	2760	32000	44.6	20.3	4090	32300	32.8	17.9	4900	33900	2.3	4900	45500
	25	58.0	20.3	3020	32300	39.2	20.3	4470	32300	28.8	17.2	5140	34500	2.0	5140	41900
	26	55.8	19.7	3060	32700	37.7	19.7	4530	32700	27.7	16.4	5140	35200	2.0	5140	41900
	28	51.8	19.7	3350	32800	35.0	19.7	4960	32500	25.8	15.0	5140	36700	1.8	5140	41900
	35	41.5	19.7	4210	32700	28.0	16.3	5140	35300	20.6	11.9	5140	40600	1.5	5140	41900
	39	37.2	19.7	4600	32700	25.2	14.9	5140	36900	18.5	10.9	5140	41900	1.3	5140	41900
	42	34.6	19.7	4980	32500	23.4	13.8	5140	38200	17.2	10.1	5140	41900	1.2	5140	41900
	46	31.6	18.6	5140	33300	21.3	12.6	5140	39800	15.7	9.3	5140	41900	1.1	5140	41900
	48	30.3	17.6	5140	34100	20.5	11.9	5140	40700	15.0	8.8	5140	41900	1.1	5140	41900
	53	27.4	16.1	5140	35600	18.5	10.9	5140	41900	13.6	8.1	5140	41900	1.0	5140	41900
	54	26.9	13.1	4330	39200	18.2	10.5	5140	41900	13.4	7.7	5140	41900	1.0	5140	41900
	60	24.2	13.1	4720	39200	16.4	9.7	5140	41900	12.0	7.1	5140	41900	0.9	5140	41900
	67	21.7	12.6	5140	39600	14.7	8.6	5140	41900	10.8	6.3	5140	41900	0.8	5140	41900
	74	19.6	11.5	5140	41400	13.3	7.8	5140	41900	9.8	5.8	5140	41900	0.7	5140	41900
	80	18.2	9.9	4790	44100	12.3	7.2	5140	41900	9.0	5.3	5140	41900	0.7	5140	41900
	88	16.5	9.7	5140	41900	11.2	6.6	5140	41900	8.2	4.8	5140	41900	0.6	5140	41900
	93	15.6	9.1	5140	41900	10.6	6.2	5140	41900	7.8	4.5	5140	41900	0.6	5140	41900
	102	14.3	8.4	5140	41900	9.7	5.7	5140	41900	7.1	4.2	5140	41900	0.5	5140	41900
	112	13.0	7.6	5140	41900	8.8	5.2	5140	41900	6.5	3.8	5140	41900	0.5	5140	41900
	123	11.8	7.0	5140	41900	8.0	4.7	5140	41900	5.9	3.5	5140	41900	0.5	5140	41900
	138	10.6	6.2	5140	41900	7.1	4.2	5140	41900	5.3	3.1	5140	41900	0.4	5140	41900
	151	9.6	5.7	5140	41900	6.5	3.8	5140	41900	4.8	2.8	5140	41900	0.4	5140	41900
	163	8.9	5.2	5140	41900	6.1	3.5	5140	41900	4.5	2.6	5140	41900	0.4	5140	41900
	179	8.1	4.8	5140	41900	5.5	3.2	5140	41900	4.1	2.4	5140	41900	0.3	5140	41900
	189	7.7	4.4	5070	43100	5.2	3.0	5140	41900	3.9	2.2	5140	41900	0.3	5140	41900
	207	7.0	4.1	5140	41900	4.8	2.8	5140	41900	3.5	2.1	5140	41900	0.3	5140	41900
	227	6.4	3.5	4790	47000	4.4	2.5	5140	41900	3.2	1.9	5140	41900	0.3	5140	41900
	249	5.9	3.5	5140	41900	4.0	2.3	5140	41900	2.9	1.7	5140	41900	0.2	5140	41900
	278	5.3	3.0	5140	41900	3.6	2.1	5140	41900	2.6	1.5	5140	41900	0.2	5140	41900
	305	4.8	2.8	5140	41900	3.3	1.9	5140	41900	2.4	1.4	5140	41900	0.2	5140	41900
4C165	11	131.9	30.0	1910	26600	89.1	30.0	2830	27400	65.5	25.4	3260	29500	4.6	3260	61500
	13	111.6	30.0	2330	27100	75.4	30.0	3450	27300	55.4	25.4	3980	29300	3.9	3980	55900
	14	103.6	30.0	2550	27300	70.0	30.0	3770	27300	51.5	25.4	4350	29200	3.6	4350	52200
	16	90.7	30.0	2910	27400	61.3	30.0	4310	26900	45.0	24.6	4820	29200	3.2	4970	44500

Selection Tables for Reducers (50Hz Input)

■ **IMPORTANT**: Please refer to page 144 for Reducer Selection Table notes.

Size	n1	1450				980				720				50		
	Ratio i	n2 [rpm]	P1 [kW]	Tout [Nm]	Pro [N]	n2 [rpm]	P1 [kW]	Tout [Nm]	Pro [N]	n2 [rpm]	P1 [kW]	Tout [Nm]	Pro [N]	n2 [rpm]	Tout [Nm]	Pro [N]
4C165 [Dimension Drawings from page 198]	18	80.6	30.0	3190	27500	54.5	30.0	4720	26700	40.0	24.0	5140	29400	2.8	5140	41900
	19	76.4	30.0	3500	27400	51.6	23.8	4110	30200	37.9	17.5	4110	34600	2.7	4130	54600
	21	69.1	30.0	3830	27300	46.7	23.8	4500	30000	34.3	17.5	4500	34500	2.4	4500	50500
	22	66.0	24.1	3270	30100	44.6	24.1	4850	29500	32.8	17.9	4900	33900	2.3	4900	45500
	25	58.0	24.1	3580	30200	39.2	23.4	5140	29800	28.8	17.2	5140	34500	2.0	5140	41900
	26	55.8	24.1	3750	30200	37.7	22.3	5140	30400	27.7	16.4	5140	35200	2.0	5140	41900
	28	51.8	24.1	4090	30100	35.0	20.4	5140	31800	25.8	15.0	5140	36700	1.8	5140	41900
	35	41.5	24.0	5140	29200	28.0	16.3	5140	35300	20.6	11.9	5140	40600	1.5	5140	41900
	39	37.2	22.0	5140	30700	25.2	14.9	5140	36900	18.5	10.9	5140	41900	1.3	5140	41900
	42	34.6	20.0	5140	31800	23.4	14.0	5140	38200	17.2	10.0	5140	41900	1.2	5140	41900
	46	31.6	18.6	5140	33300	21.3	12.6	5140	39800	15.7	9.3	5140	41900	1.1	5140	41900
	48	30.3	17.6	5140	34100	20.5	11.9	5140	40700	15.0	8.8	5140	41900	1.1	5140	41900
	53	27.4	16.1	5140	35600	18.5	10.9	5140	41900	13.6	8.1	5140	41900	1.0	5140	41900
	54	26.9	15.6	5140	36100	18.2	10.5	5140	41900	13.4	7.7	5140	41900	1.0	5140	41900
	60	24.2	14.2	5140	37600	16.4	9.7	5140	41900	12.0	7.1	5140	41900	0.9	5140	41900
	67	21.7	12.6	5140	39600	14.7	8.6	5140	41900	10.8	6.3	5140	41900	0.8	5140	41900
	74	19.6	11.5	5140	41400	13.3	7.8	5140	41900	9.8	5.8	5140	41900	0.7	5140	41900
	80	18.2	10.6	5140	41900	12.3	7.2	5140	41900	9.0	5.3	5140	41900	0.7	5140	41900
	88	16.5	9.7	5140	41900	11.2	6.6	5140	41900	8.2	4.8	5140	41900	0.6	5140	41900
	93	15.6	9.1	5140	41900	10.6	6.2	5140	41900	7.8	4.5	5140	41900	0.6	5140	41900
	102	14.3	8.4	5140	41900	9.7	5.7	5140	41900	7.1	4.2	5140	41900	0.5	5140	41900
	112	13.0	7.6	5140	41900	8.8	5.2	5140	41900	6.5	3.8	5140	41900	0.5	5140	41900
	123	11.8	7.0	5140	41900	8.0	4.7	5140	41900	5.9	3.5	5140	41900	0.5	5140	41900
	138	10.6	6.2	5140	41900	7.1	4.2	5140	41900	5.3	3.1	5140	41900	0.4	5140	41900
	151	9.6	5.7	5140	41900	6.5	3.8	5140	41900	4.8	2.8	5140	41900	0.4	5140	41900
	163	8.9	5.2	5140	41900	6.1	3.5	5140	41900	4.5	2.6	5140	41900	0.4	5140	41900
	179	8.1	4.8	5140	41900	5.5	3.2	5140	41900	4.1	2.4	5140	41900	0.3	5140	41900
	189	7.7	4.5	5140	41900	5.2	3.0	5140	41900	3.9	2.2	5140	41900	0.3	5140	41900
	207	7.0	4.1	5140	41900	4.8	2.8	5140	41900	3.5	2.1	5140	41900	0.3	5140	41900
	227	6.4	3.7	5140	41900	4.4	2.5	5140	41900	3.2	1.9	5140	41900	0.3	5140	41900
	249	5.9	3.5	5140	41900	4.0	2.3	5140	41900	2.9	1.7	5140	41900	0.2	5140	41900
	278	5.3	3.0	5140	41900	3.6	2.1	5140	41900	2.6	1.5	5140	41900	0.2	5140	41900
	305	4.8	2.8	5140	41900	3.3	1.9	5140	41900	2.4	1.4	5140	41900	0.2	5140	41900
4C170 [Dimension Drawings from page 198]	11	131.9	41.5 ※	2650	23900	89.1	41.5	3920	23400	65.5	30.9	3970	26900	4.6	3980	55900
	13	111.6	41.5 ※	3230	23800	75.4	38.9	4480	23600	55.4	30.9	4840	26100	3.9	4850	46300
	14	103.6	41.5 ※	3530	23600	70.0	36.5	4590	24300	51.5	28.6	4900	27100	3.6	4900	45500
	16	90.7	41.5 ※	4030	23300	61.3	33.6	4830	25100	45.0	26.3	5140	28100	3.2	5140	41900
	18	80.6	41.4 ※	4400	22900	54.5	31.5	4950	25800	40.0	23.2	4960	30100	2.8	4960	44600
	19	76.4	33.9	3950	25700	51.6	29.7	5120	26400	37.9	21.9	5140	30700	2.7	5140	41900
	21	69.1	33.9	4320	25400	46.7	24.3	4590	29700	34.3	17.9	4590	34100	2.4	4590	49500
	22	66.0	33.9	4610	25100	44.6	24.3	4900	29400	32.8	17.9	4900	34000	2.3	4900	45600
	25	58.0	32.3	4810	25600	39.2	23.4	5140	29800	28.8	17.2	5140	34500	2.0	5140	41900
	26	55.8	31.9	4970	25600	37.7	22.3	5140	30400	27.7	16.4	5140	35200	2.0	5140	41900
	28	51.8	29.4	5000	26700	35.0	20.4	5140	31800	25.8	15.0	5140	36700	1.8	5140	41900
	35	41.5	24.0	5140	29200	28.0	16.3	5140	35300	20.6	11.9	5140	40600	1.5	5140	41900
	39	37.2	22.0	5140	30700	25.2	14.9	5140	36900	18.5	10.9	5140	41900	1.3	5140	41900
	42	34.6	20.3	5140	31800	23.4	13.8	5140	38200	17.2	10.1	5140	41900	1.2	5140	41900
	46	31.6	18.6	5140	33300	21.3	12.6	5140	39800	15.7	9.3	5140	41900	1.1	5140	41900
	48	30.3	17.6	5140	34100	20.5	11.9	5140	40700	15.0	8.8	5140	41900	1.1	5140	41900
	53	27.4	16.1	5140	35600	18.5	10.9	5140	41900	13.6	8.1	5140	41900	1.0	5140	41900
	54	26.9	15.6	5140	36100	18.2	10.5	5140	41900	13.4	7.7	5140	41900	1.0	5140	41900
	60	24.2	14.2	5140	37600	16.4	9.7	5140	41900	12.0	7.1	5140	41900	0.9	5140	41900
	67	21.7	12.6	5140	39600	14.7	8.6	5140	41900	10.8	6.3	5140	41900	0.8	5140	41900
	74	19.6	11.5	5140	41400	13.3	7.8	5140	41900	9.8	5.8	5140	41900	0.7	5140	41900
	80	18.2	10.6	5140	41900	12.3	7.2	5140	41900	9.0	5.3	5140	41900	0.7	5140	41900
	88	16.5	9.7	5140	41900	11.2	6.6	5140	41900	8.2	4.8	5140	41900	0.6	5140	41900
	93	15.6	9.1	5140	41900	10.6	6.2	5140	41900	7.8	4.5	5140	41900	0.6	5140	41900
	102	14.3	8.4	5140	41900	9.7	5.7	5140	41900	7.1	4.2	5140	41900	0.5	5140	41900
	112	13.0	7.6	5140	41900	8.8	5.2	5140	41900	6.5	3.8	5140	41900	0.5	5140	41900
	123	11.8	7.0	5140	41900	8.0	4.7	5140	41900	5.9	3.5	5140	41900	0.5	5140	41900
	138	10.6	6.2	5140	41900	7.1	4.2	5140	41900	5.3	3.1	5140	41900	0.4	5140	41900
	151	9.6	5.7	5140	41900	6.5	3.8	5140	41900	4.8	2.8	5140	41900	0.4	5140	41900

Selection Tables for Reducers (50Hz Input)

■**IMPORTANT**: Please refer to page 144 for Reducer Selection Table notes.

Size	n1	1450				980				720				50		
	Ratio i	n2 [rpm]	P1 [kW]	Tout [Nm]	Pro [N]	n2 [rpm]	P1 [kW]	Tout [Nm]	Pro [N]	n2 [rpm]	P1 [kW]	Tout [Nm]	Pro [N]	n2 [rpm]	Tout [Nm]	Pro [N]
4C170 [Dimension Drawings from page 198]	163	8.9	5.2	5140	41900	6.1	3.5	5140	41900	4.5	2.6	5140	41900	0.4	5140	41900
	179	8.1	4.8	5140	41900	5.5	3.2	5140	41900	4.1	2.4	5140	41900	0.3	5140	41900
	189	7.7	4.5	5140	41900	5.2	3.0	5140	41900	3.9	2.2	5140	41900	0.3	5140	41900
	207	7.0	4.1	5140	41900	4.8	2.8	5140	41900	3.5	2.1	5140	41900	0.3	5140	41900
	227	6.4	3.7	5140	41900	4.4	2.5	5140	41900	3.2	1.9	5140	41900	0.3	5140	41900
	249	5.9	3.5	5140	41900	4.0	2.3	5140	41900	2.9	1.7	5140	41900	0.2	5140	41900
	278	5.3	3.0	5140	41900	3.6	2.1	5140	41900	2.6	1.5	5140	41900	0.2	5140	41900
	305	4.8	2.8	5140	41900	3.3	1.9	5140	41900	2.4	1.4	5140	41900	0.2	5140	41900
4C175 [Dimension Drawings from page 198]	11	131.9	45.0 ※	2870	23100	89.1	42.1	3970	23200	65.5	30.9	3970	26900	4.6	3980	55900
	13	111.6	45.0 ※	3500	22800	75.4	38.9	4480	23600	55.4	30.9	4840	26100	3.9	4850	46300
	14	103.6	45.0 ※	3830	22500	70.0	36.5	4590	24300	51.5	28.6	4900	27100	3.6	4900	45500
	16	90.7	44.2 ※	4290	22300	61.3	33.6	4830	25100	45.0	26.3	5140	28100	3.2	5140	41900
	18	80.6	41.4 ※	4400	22900	54.5	31.5	4950	25800	40.0	23.2	4960	30100	2.8	4960	44600
	19	76.4	37.0	4310	24400	51.6	29.7	5120	26400	37.9	21.9	5140	30700	2.7	5140	41900
	21	69.1	36.0	4590	24500	46.7	24.3	4590	29700	34.3	17.9	4590	34100	2.4	4590	49500
	22	66.0	34.9	4740	24600	44.6	24.3	4900	29400	32.8	17.9	4900	34000	2.3	4900	45600
	25	58.0	32.3	4810	25600	39.2	23.4	5140	29800	28.8	17.2	5140	34500	2.0	5140	41900
	26	55.8	31.9	4970	25600	37.7	22.3	5140	30400	27.7	16.4	5140	35200	2.0	5140	41900
	28	51.8	29.4	5000	26700	35.0	20.4	5140	31800	25.8	15.0	5140	36700	1.8	5140	41900
	35	41.5	24.0	5140	29200	28.0	16.3	5140	35300	20.6	11.9	5140	40600	1.5	5140	41900
	39	37.2	22.0	5140	30700	25.2	14.9	5140	36900	18.5	10.9	5140	41900	1.3	5140	41900
	42	34.6	20.3	5140	31800	23.4	13.8	5140	38200	17.2	10.1	5140	41900	1.2	5140	41900
	46	31.6	18.6	5140	33300	21.3	12.6	5140	39800	15.7	9.3	5140	41900	1.1	5140	41900
	48	30.3	17.6	5140	34100	20.5	11.9	5140	40700	15.0	8.8	5140	41900	1.1	5140	41900
	53	27.4	16.1	5140	35600	18.5	10.9	5140	41900	13.6	8.1	5140	41900	1.0	5140	41900
	54	26.9	15.6	5140	36100	18.2	10.5	5140	41900	13.4	7.7	5140	41900	1.0	5140	41900
	60	24.2	14.2	5140	37600	16.4	9.7	5140	41900	12.0	7.1	5140	41900	0.9	5140	41900
	67	21.7	12.6	5140	39600	14.7	8.6	5140	41900	10.8	6.3	5140	41900	0.8	5140	41900
	74	19.6	11.5	5140	41400	13.3	7.8	5140	41900	9.8	5.8	5140	41900	0.7	5140	41900
	80	18.2	10.6	5140	41900	12.3	7.2	5140	41900	9.0	5.3	5140	41900	0.7	5140	41900
	88	16.5	9.7	5140	41900	11.2	6.6	5140	41900	8.2	4.8	5140	41900	0.6	5140	41900
	93	15.6	9.1	5140	41900	10.6	6.2	5140	41900	7.8	4.5	5140	41900	0.6	5140	41900
	102	14.3	8.4	5140	41900	9.7	5.7	5140	41900	7.1	4.2	5140	41900	0.5	5140	41900
	112	13.0	7.6	5140	41900	8.8	5.2	5140	41900	6.5	3.8	5140	41900	0.5	5140	41900
	123	11.8	7.0	5140	41900	8.0	4.7	5140	41900	5.9	3.5	5140	41900	0.5	5140	41900
	138	10.6	6.2	5140	41900	7.1	4.2	5140	41900	5.3	3.1	5140	41900	0.4	5140	41900
	151	9.6	5.7	5140	41900	6.5	3.8	5140	41900	4.8	2.8	5140	41900	0.4	5140	41900
	163	8.9	5.2	5140	41900	6.1	3.5	5140	41900	4.5	2.6	5140	41900	0.4	5140	41900
	179	8.1	4.8	5140	41900	5.5	3.2	5140	41900	4.1	2.4	5140	41900	0.3	5140	41900
	189	7.7	4.5	5140	41900	5.2	3.0	5140	41900	3.9	2.2	5140	41900	0.3	5140	41900
	207	7.0	4.1	5140	41900	4.8	2.8	5140	41900	3.5	2.1	5140	41900	0.3	5140	41900
	227	6.4	3.7	5140	41900	4.4	2.5	5140	41900	3.2	1.9	5140	41900	0.3	5140	41900
	249	5.9	3.5	5140	41900	4.0	2.3	5140	41900	2.9	1.7	5140	41900	0.2	5140	41900
	278	5.3	3.0	5140	41900	3.6	2.1	5140	41900	2.6	1.5	5140	41900	0.2	5140	41900
	305	4.8	2.8	5140	41900	3.3	1.9	5140	41900	2.4	1.4	5140	41900	0.2	5140	41900
4D 160 [Dimension Drawings from page 198]	19	76.4	25.3	2950	49100	51.6	23.8	4110	52700	37.9	17.5	4110	59000	2.7	4130	90000
	21	69.1	25.3	3230	49800	46.7	23.8	4500	53200	34.3	17.5	4500	59800	2.4	4500	88200
	22	66.0	20.3	2760	52400	44.6	20.3	4090	55800	32.8	19.7	5390	58300	2.3	5450	83100
	25	58.0	20.3	3020	53300	39.2	20.3	4470	56500	28.8	19.7	5890	58900	2.0	5960	79700
	26	55.8	19.7	3060	54000	37.7	19.7	4530	57300	27.7	17.4	5450	61300	2.0	5450	83100
	28	51.8	19.7	3350	54800	35.0	19.7	4960	57900	25.8	17.4	5960	61800	1.8	5960	79700
	35	41.5	19.7	4210	56600	28.0	17.2	5450	61400	20.6	12.7	5450	69100	1.5	5450	83100
	39	37.2	19.7	4600	57400	25.2	17.2	5960	62100	18.5	12.7	5960	69900	1.3	5960	79700
	42	34.6	19.7	4980	57900	23.4	14.6	5460	65600	17.2	10.7	5440	73600	1.2	5450	83100
	46	31.6	19.7	5440	58400	21.3	14.6	5960	66200	15.7	10.7	5960	74500	1.1	5960	79700
	48	30.3	18.7	5450	59600	20.5	12.6	5430	69200	15.0	9.3	5450	77600	1.1	5450	83100
	53	27.4	18.7	5960	60100	18.5	12.6	5960	70000	13.6	9.3	5960	78600	1.0	5960	79700

Selection Tables for Reducers (50Hz Input)

■ **IMPORTANT**: Please refer to page 144 for Reducer Selection Table notes.

Size	n1	1450				980				720				50		
	Ratio i	n2 [rpm]	P1 [kW]	Tout [Nm]	Pro [N]	n2 [rpm]	P1 [kW]	Tout [Nm]	Pro [N]	n2 [rpm]	P1 [kW]	Tout [Nm]	Pro [N]	n2 [rpm]	Tout [Nm]	Pro [N]
4D160 [Dimension Drawings from page 198]	54	26.9	13.1	4330	66200	18.2	11.2	5470	72500	13.4	8.2	5450	81200	1.0	5450	83100
	60	24.2	13.1	4720	67100	16.4	11.2	5960	73400	12.0	8.2	5960	79700	0.9	5960	79700
	67	21.7	12.9	5260	68300	14.7	9.1	5450	78300	10.8	6.7	5450	83100	0.8	5450	83100
	74	19.6	12.9	5760	69100	13.3	9.1	5960	79400	9.8	6.7	5960	79700	0.7	5960	79700
	80	18.2	9.9	4790	74300	12.3	7.6	5450	83100	9.0	5.6	5450	83100	0.7	5450	83100
	88	16.5	9.9	5240	75500	11.2	7.6	5960	79700	8.2	5.6	5960	79700	0.6	5960	79700
	93	15.6	9.6	5390	76600	10.6	6.5	5450	83100	7.8	4.8	5450	83100	0.6	5460	83100
	102	14.3	9.6	5890	77600	9.7	6.6	5960	79700	7.1	4.8	5960	79700	0.5	5960	79700
	112	13.0	8.1	5450	81800	8.8	5.5	5450	83100	6.5	4.0	5450	83100	0.5	5450	83100
	123	11.8	8.1	5960	79700	8.0	5.5	5960	79700	5.9	4.0	5960	79700	0.5	5960	79700
	138	10.6	6.5	5390	83400	7.1	4.4	5390	83400	5.3	3.2	5380	83400	0.4	5380	83400
	151	9.6	6.5	5890	80200	6.5	4.4	5890	80200	4.8	3.2	5890	80200	0.4	5890	80200
	163	8.9	5.5	5450	83100	6.1	3.7	5450	83100	4.5	2.7	5450	83100	0.4	5460	83100
	179	8.1	5.5	5960	79700	5.5	3.8	5960	79700	4.1	2.8	5960	79700	0.3	5960	79700
	189	7.7	4.4	5070	85300	5.2	3.2	5450	83100	3.9	2.4	5450	83100	0.3	5450	83100
	207	7.0	4.5	5540	82500	4.8	3.3	5960	79700	3.5	2.4	5960	79700	0.3	5960	79700
	227	6.4	3.5	4790	86800	4.4	2.7	5450	83100	3.2	2.0	5450	83100	0.3	5440	83100
	249	5.9	3.5	5240	84300	4.0	2.7	5960	79700	2.9	2.0	5960	79700	0.2	5960	79700
	278	5.3	3.2	5440	83100	3.6	2.2	5450	83100	2.6	1.6	5450	83100	0.2	5440	83100
	305	4.8	3.3	5960	79700	3.3	2.2	5960	79700	2.4	1.6	5960	79700	0.2	5960	79700
4D165 [Dimension Drawings from page 198]	19	76.4	30.0	3500	47300	51.6	23.8	4110	52700	37.9	17.5	4110	59000	2.7	4130	90000
	21	69.1	30.0	3830	47900	46.7	23.8	4500	53200	34.3	17.5	4500	59800	2.4	4500	88200
	22	66.0	24.1	3270	50700	44.6	24.1	4850	53400	32.8	19.7	5390	58300	2.3	5610	82000
	25	58.0	24.1	3580	51500	39.2	24.1	5310	53900	28.8	19.7	5890	58900	2.0	6140	78400
	26	55.8	24.1	3750	51800	37.7	22.5	5180	55200	27.7	17.8	5570	60900	2.0	5820	80800
	28	51.8	24.1	4090	52500	35.0	22.5	5670	55600	25.8	17.8	6090	61400	1.8	6340	76900
	35	41.5	24.1	5140	53700	28.0	20.6	6520	58000	20.6	15.2	6520	65600	1.5	6520	75500
	39	37.2	24.1	5620	54200	25.2	20.6	7130	58400	18.5	15.2	7130	66200	1.3	7130	70100
	42	34.6	22.6	5710	55600	23.4	17.4	6500	62200	17.2	12.8	6510	70200	1.2	6520	75500
	46	31.6	22.6	6250	55900	21.3	17.4	7130	62500	15.7	12.8	7130	70100	1.1	7130	70100
	48	30.3	22.4	6530	56200	20.5	15.1	6510	65500	15.0	11.1	6520	74200	1.1	6530	75500
	53	27.4	22.4	7130	56400	18.5	15.1	7130	66200	13.6	11.1	7130	70100	1.0	7130	70100
	54	26.9	18.8	6210	60100	18.2	13.3	6500	69100	13.4	9.8	6520	75500	1.0	6520	75500
	60	24.2	18.8	6810	60500	16.4	13.3	7130	69600	12.0	9.8	7130	70100	0.9	7130	70100
	67	21.7	16.0	6520	64300	14.7	10.8	6520	74900	10.8	8.0	6520	75500	0.8	6520	75500
	74	19.6	16.0	7130	64800	13.3	10.8	7130	70100	9.8	8.0	7130	70100	0.7	7130	70100
	80	18.2	13.4	6520	68800	12.3	9.1	6520	75500	9.0	6.7	6520	75500	0.7	6520	75500
	88	16.5	13.4	7130	69500	11.2	9.1	7130	70100	8.2	6.7	7130	70100	0.6	7130	70100
	93	15.6	11.4	6420	73300	10.6	7.8	6520	75500	7.8	5.8	6530	75500	0.6	6520	75500
	102	14.3	11.4	7030	71000	9.7	7.9	7130	70100	7.1	5.8	7130	70100	0.5	7130	70100
	112	13.0	9.6	6520	75500	8.8	6.5	6520	75500	6.5	4.8	6520	75500	0.5	6520	75500
	123	11.8	9.6	7130	70100	8.0	6.5	7130	70100	5.9	4.8	7130	70100	0.5	7130	70100
	138	10.6	7.8	6530	75500	7.1	5.3	6530	75500	5.3	3.9	6530	75500	0.4	6520	75500
	151	9.6	7.9	7130	70100	6.5	5.3	7130	70100	4.8	3.9	7130	70100	0.4	7130	70100
	163	8.9	6.6	6520	75500	6.1	4.5	6530	75500	4.5	3.3	6530	75500	0.4	6520	75500
	179	8.1	6.6	7130	70100	5.5	4.5	7130	70100	4.1	3.3	7130	70100	0.3	7130	70100
	189	7.7	5.7	6520	75500	5.2	3.8	6510	75500	3.9	2.8	6510	75500	0.3	6520	75500
	207	7.0	5.7	7130	70100	4.8	3.9	7130	70100	3.5	2.9	7130	70100	0.3	7130	70100
	227	6.4	4.7	6530	75500	4.4	3.2	6510	75500	3.2	2.4	6530	75500	0.3	6520	75500
	249	5.9	4.8	7130	70100	4.0	3.2	7130	70100	2.9	2.4	7130	70100	0.2	7130	70100
	278	5.3	3.8	6370	76700	3.6	2.6	6380	76700	2.6	1.9	6370	76700	0.2	6370	76700
	305	4.8	3.8	6970	71700	3.3	2.6	6970	71700	2.4	1.9	6970	71700	0.2	6970	71700

Selection Tables for Reducers (50Hz Input)

■ **IMPORTANT**: Please refer to page 144 for Reducer Selection Table notes.

Size	n1	1450				980				720				50		
	Ratio i	n2 [rpm]	P1 [kW]	Tout [Nm]	Pro [N]	n2 [rpm]	P1 [kW]	Tout [Nm]	Pro [N]	n2 [rpm]	P1 [kW]	Tout [Nm]	Pro [N]	n2 [rpm]	Tout [Nm]	Pro [N]
4D170 [Dimension Drawings from page 198]	11	131.9	41.5 ※	2650	40400	89.1	41.5	3920	42400	65.5	30.9	3970	47600	4.6	3980	90600
	13	111.6	41.5 ※	3230	41500	75.4	41.5	4770	43000	55.4	30.9	4840	48500	3.9	4850	86500
	14	103.6	41.5 ※	3530	42000	70.0	41.5	5220	43200	51.5	30.9	5290	48800	3.6	5300	84000
	16	90.7	41.5 ※	4030	42500	61.3	41.5	5970	43300	45.0	30.9	6050	49100	3.2	6060	79100
	18	80.6	41.5 ※	4410	42800	54.5	41.5	6530	43200	40.0	30.9	6610	49100	2.8	6630	74700
	19	76.4	33.9	3950	45900	51.6	33.4	5760	47400	37.9	24.6	5780	53800	2.7	5780	81000
	26	55.8	33.9	5270	47000	37.7	33.9	7800	46900	27.7	25.1	7860	53700	2.0	7840	62500
	42	34.6	27.3	6900	51800	23.4	21.0	7850	58000	17.2	15.4	7830	62600	1.2	7840	62600
	48	30.3	25.5	7430	53300	20.5	18.2	7850	61600	15.0	13.4	7870	62500	1.1	7860	62500
	53	27.4	25.5	8130	53200	18.5	18.2	8590	52600	13.6	13.4	8590	52600	1.0	8590	52600
	54	26.9	19.7	6510	59300	18.2	16.1	7870	62500	13.4	11.8	7850	62500	1.0	7860	62500
	60	24.2	19.7	7100	59500	16.4	16.1	8590	52600	12.0	11.8	8590	52600	0.9	8590	52600
	67	21.7	18.6	7580	60900	14.7	13.0	7860	62500	10.8	9.6	7860	62500	0.8	7860	62500
	74	19.6	18.6	8290	56900	13.3	13.0	8590	52600	9.8	9.6	8590	52600	0.7	8590	52600
	80	18.2	15.6	7570	65500	12.3	10.9	7860	62500	9.0	8.1	7860	62500	0.7	7860	62500
	88	16.5	15.6	8280	57200	11.2	10.9	8590	52600	8.2	8.1	8590	52600	0.6	8590	52600
	93	15.6	13.5	7610	65600	10.6	9.4	7850	62500	7.8	7.0	7850	62500	0.6	7860	62500
	102	14.3	13.5	8290	56900	9.7	9.5	8590	52600	7.1	7.0	8590	52600	0.5	8590	52600
	112	13.0	11.2	7590	65500	8.8	7.9	7860	62500	6.5	5.8	7860	62500	0.5	7860	62500
	123	11.8	11.2	8300	56900	8.0	7.9	8590	52600	5.9	5.8	8590	52600	0.5	8590	52600
	138	10.6	9.1	7590	65500	7.1	6.4	7880	62500	5.3	4.7	7860	62500	0.4	7850	62500
	151	9.6	9.1	8300	56900	6.5	6.4	8590	52600	4.8	4.7	8590	52600	0.4	8590	52600
	163	8.9	7.7	7590	65500	6.1	5.4	7860	62500	4.5	3.9	7860	62500	0.4	7850	62500
	179	8.1	7.7	8300	56800	5.5	5.4	8590	52600	4.1	4.0	8590	52600	0.3	8590	52600
	189	7.7	6.6	7590	65500	5.2	4.6	7850	62500	3.9	3.4	7850	62500	0.3	7850	62500
	207	7.0	6.7	8300	56900	4.8	4.7	8590	52600	3.5	3.4	8590	52600	0.3	8590	52600
	227	6.4	5.5	7590	65400	4.4	3.9	7860	62500	3.2	2.83	7860	62500	0.3	7840	62500
	249	5.9	5.5	8310	56800	4.0	3.9	8590	52600	2.9	2.9	8590	52600	0.2	8590	52600
	278	5.3	4.6	7730	64000	3.6	3.1	7850	62500	2.6	2.3	7860	62500	0.2	7840	62500
	305	4.8	4.6	8450	54800	3.3	3.2	8590	52600	2.4	2.4	8590	52600	0.2	8590	52600
4D175 [Dimension Drawings from page 198]	11	131.9	45.0 ※	2870	39700	89.1	42.1	3970	42200	65.5	30.9	3970	47600	4.6	3980	90600
	13	111.6	45.0 ※	3500	40600	75.4	42.1	4840	42800	55.4	30.9	4840	48500	3.9	4850	86500
	14	103.6	45.0 ※	3830	41000	70.0	42.1	5300	43000	51.5	30.9	5290	48800	3.6	5300	84000
	16	90.7	45.0 ※	4370	41400	61.3	42.1	6050	43000	45.0	30.9	6050	49100	3.2	6060	79100
	18	80.6	45.0 ※	4780	41700	54.5	42.1	6620	42900	40.0	30.9	6610	49100	2.8	6630	74700
	19	76.4	37.0	4310	44700	51.6	33.4	5760	47400	37.9	24.6	5780	53800	2.7	5780	81000
	26	55.8	37.0	5750	45400	37.7	35.1	8070	46000	27.7	25.8	8080	52900	2.0	8070	59700
	42	34.6	30.0	7600	49500	23.4	23.0	8720	50600	17.2	17.0	8720	50600	1.2	8720	50600
	48	30.3	29.9	8720	49300	20.5	20.2	8720	50600	15.0	14.9	8720	50600	1.1	8720	50600
	53	27.4	27.4	8720	50600	18.5	18.5	8720	50600	13.6	13.6	8720	50600	1.0	8720	50600
	54	26.9	24.1	7960	54700	18.2	17.8	8720	50600	13.4	13.1	8720	50600	1.0	8720	50600
	60	24.2	24.1	8690	51100	16.4	16.3	8720	50600	12.0	12.0	8720	50600	0.9	8720	50600
	67	21.7	21.4	8720	50600	14.7	14.4	8720	50600	10.8	10.6	8720	50600	0.8	8720	50600
	74	19.6	19.5	8720	50600	13.3	13.2	8720	50600	9.8	9.7	8720	50600	0.7	8720	50600
	80	18.2	17.9	8720	50600	12.3	12.1	8720	50600	9.0	9.0	8720	50600	0.7	8720	50600
	88	16.5	16.4	8720	50600	11.2	11.1	8720	50600	8.2	8.2	8720	50600	0.6	8720	50600
	93	15.6	15.5	8720	50600	10.6	10.5	8720	50600	7.8	7.7	8720	50600	0.6	8720	50600
	102	14.3	14.1	8720	50600	9.7	9.6	8720	50600	7.1	7.1	8720	50600	0.5	8720	50600
	112	13.0	12.8	8720	50600	8.8	8.7	8720	50600	6.5	6.4	8720	50600	0.5	8720	50600
	123	11.8	11.7	8720	50600	8.0	8.0	8720	50600	5.9	5.9	8720	50600	0.5	8720	50600
	138	10.6	10.4	8720	50600	7.1	7.1	8720	50600	5.3	5.2	8720	50600	0.4	8720	50600
	151	9.6	9.6	8720	50600	6.5	6.5	8720	50600	4.8	4.8	8720	50600	0.4	8720	50600
	163	8.9	8.8	8720	50600	6.1	6.0	8720	50600	4.5	4.4	8720	50600	0.4	8720	50600
	179	8.1	8.1	8720	50600	5.5	5.5	8720	50600	4.1	4.0	8720	50600	0.3	8720	50600
	189	7.7	7.61	8720	50600	5.2	5.1	8720	50600	3.9	3.8	8720	50600	0.3	8720	50600
	207	7.0	7.0	8720	50600	4.8	4.7	8720	50600	3.5	3.5	8720	50600	0.3	8720	50600
	227	6.4	6.32	8720	50600	4.4	4.3	8720	50600	3.2	3.1	8720	50600	0.3	8720	50600
	249	5.9	5.8	8720	50600	4.0	4.0	8720	50600	2.9	2.9	8720	50600	0.2	8720	50600
	278	5.3	5.2	8720	50600	3.6	3.5	8720	50600	2.6	2.6	8720	50600	0.2	8720	50600
	305	4.8	4.8	8720	50600	3.3	3.2	8720	50600	2.4	2.4	8720	50600	0.2	8720	50600

Selection Tables for Reducers (50Hz Input)

■**IMPORTANT**: Please refer to page 144 for Reducer Selection Table notes.

Size	n1	1450				980				720				50		
	Ratio i	n2 [rpm]	P1 [kW]	Tout [Nm]	Pro [N]	n2 [rpm]	P1 [kW]	Tout [Nm]	Pro [N]	n2 [rpm]	P1 [kW]	Tout [Nm]	Pro [N]	n2 [rpm]	Tout [Nm]	Pro [N]
4D180 [Dimension Drawings from page 198]	11	131.9	53.4 ※	3400	38000	89.1	53.4	5040	38900	65.5	41.1	5280	43400	4.6	5270	84100
	13	111.6	53.4 ※	4150	38600	75.4	53.4	6140	38700	55.4	41.1	6430	43400	3.9	6420	76200
	14	103.6	53.4 ※	4540	38800	70.0	53.4	6720	38500	51.5	41.1	7040	43300	3.6	7030	71000
	16	90.7	53.4 ※	5190	38900	61.3	53.4	7680	37900	45.0	41.1	8040	42700	3.2	8030	60200
	18	80.6	53.4 ※	5670	38800	54.5	50.1	7880	38900	40.0	40.4	8640	42700	2.8	8720	50600
	19	76.4	41.5 ※	4840	43100	51.6	41.5	7160	43000	37.9	30.9	7260	49000	2.7	7270	68800
	21	69.1	41.5 ※	5290	43200	46.7	41.5	7830	42700	34.3	30.9	7940	48900	2.4	7950	61400
	22	66.0	41.5 ※	5640	43300	44.6	37.4	7530	44900	32.8	27.5	7530	51600	2.3	7530	66100
	25	58.0	41.5 ※	6170	43300	39.2	37.4	8230	44600	28.8	27.5	8240	51400	2.0	8240	57700
	26	55.8	41.5 ※	6450	43200	37.7	33.3	7660	47400	27.7	24.4	7640	54300	2.0	7660	64800
	28	51.8	41.5 ※	7060	43100	35.0	33.3	8380	47100	25.8	24.4	8360	54200	1.8	8380	55900
	35	41.5	39.8 ※	8510	43100	28.0	27.6	8720	50600	20.6	20.3	8720	50600	1.5	8720	50600
	39	37.2	36.7	8570	44800	25.2	25.2	8720	50600	18.5	18.5	8720	50600	1.3	8720	50600
	42	34.6	34.5	8720	46000	23.4	23.3	8720	50600	17.2	17.1	8720	50600	1.2	8720	50600
	46	31.6	31.6	8720	48100	21.3	21.3	8720	50600	15.7	15.7	8720	50600	1.1	8720	50600
	48	30.3	29.9	8720	49300	20.5	20.2	8720	50600	15.0	14.9	8720	50600	1.1	8720	50600
	53	27.4	27.4	8720	50600	18.5	18.5	8720	50600	13.6	13.6	8720	50600	1.0	8720	50600
	54	26.9	26.4	8720	50600	18.2	17.8	8720	50600	13.4	13.1	8720	50600	1.0	8720	50600
	60	24.2	24.1	8720	50600	16.4	16.3	8720	50600	12.0	12.0	8720	50600	0.9	8720	50600
	67	21.7	21.4	8720	50600	14.7	14.4	8720	50600	10.8	10.6	8720	50600	0.8	8720	50600
	74	19.6	19.5	8720	50600	13.3	13.2	8720	50600	9.8	9.7	8720	50600	0.7	8720	50600
	80	18.2	17.9	8720	50600	12.3	12.1	8720	50600	9.0	9.0	8720	50600	0.7	8720	50600
	88	16.5	16.4	8720	50600	11.2	11.1	8720	50600	8.2	8.2	8720	50600	0.6	8720	50600
	93	15.6	15.5	8720	50600	10.6	10.5	8720	50600	7.8	7.7	8720	50600	0.6	8720	50600
	102	14.3	14.1	8720	50600	9.7	9.6	8720	50600	7.1	7.1	8720	50600	0.5	8720	50600
	112	13.0	12.8	8720	50600	8.8	8.7	8720	50600	6.5	6.4	8720	50600	0.5	8720	50600
	123	11.8	11.7	8720	50600	8.0	8.0	8720	50600	5.9	5.9	8720	50600	0.5	8720	50600
	138	10.6	10.4	8720	50600	7.1	7.1	8720	50600	5.3	5.2	8720	50600	0.4	8720	50600
	151	9.6	9.6	8720	50600	6.5	6.5	8720	50600	4.8	4.8	8720	50600	0.4	8720	50600
	163	8.9	8.8	8720	50600	6.1	6.0	8720	50600	4.5	4.4	8720	50600	0.4	8720	50600
	179	8.1	8.1	8720	50600	5.5	5.5	8720	50600	4.1	4.0	8720	50600	0.3	8720	50600
	189	7.7	7.6	8720	50600	5.2	5.1	8720	50600	3.9	3.8	8720	50600	0.3	8720	50600
	207	7.0	7.0	8720	50600	4.8	4.7	8720	50600	3.5	3.5	8720	50600	0.3	8720	50600
	227	6.4	6.3	8720	50600	4.4	4.3	8720	50600	3.2	3.1	8720	50600	0.3	8720	50600
	249	5.9	5.8	8720	50600	4.0	4.0	8720	50600	2.9	2.9	8720	50600	0.2	8720	50600
	278	5.3	5.16	8720	50600	3.6	3.5	8720	50600	2.6	2.6	8720	50600	0.2	8720	50600
	305	4.8	4.8	8720	50600	3.3	3.2	8720	50600	2.4	2.4	8720	50600	0.2	8720	50600
4D185 [Dimension Drawings from page 198]	11	131.9	60.0 ※	3830	36600	89.1	55.9	5270	38100	65.5	41.1	5280	43400	4.6	5270	84100
	13	111.6	60.0 ※	4660	36900	75.4	55.9	6430	37800	55.4	41.1	6430	43400	3.9	6420	76200
	14	103.6	60.0 ※	5100	37000	70.0	55.9	7030	37500	51.5	41.1	7040	43300	3.6	7030	71000
	16	90.7	60.0 ※	5830	36800	61.3	54.5	7840	37400	45.0	41.1	8040	42700	3.2	8030	60200
	18	80.6	60.0 ※	6380	36600	54.5	50.1	7880	38900	40.0	40.4	8640	42700	2.8	8720	50600
	19	76.4	45.0 ※	5250	41800	51.6	42.8	7380	42300	37.9	31.4	7370	48700	2.7	7370	67700
	21	69.1	45.0 ※	5740	41800	46.7	42.6	8040	42000	34.3	31.4	8060	48500	2.4	8060	59900
	22	66.0	45.0 ※	6120	41800	44.6	38.0	7650	44600	32.8	27.9	7640	51200	2.3	7650	64800
	25	58.0	45.0 ※	6690	41600	39.2	38.0	8360	44200	28.8	27.9	8360	51000	2.0	8370	56000
	26	55.8	45.0 ※	7000	41500	37.7	33.8	7770	47000	27.7	24.8	7760	53900	2.0	7750	63500
	28	51.8	45.0 ※	7650	41200	35.0	33.8	8500	46700	25.8	24.8	8490	53800	1.8	8480	54100
	35	41.5	39.8 ※	8510	43100	28.0	27.6	8720	50600	20.6	20.3	8720	50600	1.5	8720	50600
	39	37.2	36.7	8570	44800	25.2	25.2	8720	50600	18.5	18.5	8720	50600	1.3	8720	50600
	42	34.6	34.5	8720	46000	23.4	23.3	8720	50600	17.2	17.1	8720	50600	1.2	8720	50600
	46	31.6	31.6	8720	48100	21.3	21.3	8720	50600	15.7	15.7	8720	50600	1.1	8720	50600
	48	30.3	29.9	8720	49300	20.5	20.2	8720	50600	15.0	14.9	8720	50600	1.1	8720	50600
	53	27.4	27.4	8720	50600	18.5	18.5	8720	50600	13.6	13.6	8720	50600	1.0	8720	50600
	54	26.9	26.4	8720	50600	18.2	17.8	8720	50600	13.4	13.1	8720	50600	1.0	8720	50600

Selection Tables for Reducers (50Hz Input)

■**IMPORTANT**: Please refer to page 144 for Reducer Selection Table notes.

Size	n1	1450				980				720				50		
	Ratio i	n2 [rpm]	P1 [kW]	Tout [Nm]	Pro [N]	n2 [rpm]	P1 [kW]	Tout [Nm]	Pro [N]	n2 [rpm]	P1 [kW]	Tout [Nm]	Pro [N]	n2 [rpm]	Tout [Nm]	Pro [N]
4D185 [Dimension Drawings from page 198]	60	24.2	24.1	8720	50600	16.4	16.3	8720	50600	12.0	12.0	8720	50600	0.9	8720	50600
	67	21.7	21.4	8720	50600	14.7	14.4	8720	50600	10.8	10.6	8720	50600	0.8	8720	50600
	74	19.6	19.5	8720	50600	13.3	13.2	8720	50600	9.8	9.7	8720	50600	0.7	8720	50600
	80	18.2	17.9	8720	50600	12.3	12.1	8720	50600	9.0	9.0	8720	50600	0.7	8720	50600
	88	16.5	16.4	8720	50600	11.2	11.1	8720	50600	8.2	8.2	8720	50600	0.6	8720	50600
	93	15.6	15.5	8720	50600	10.6	10.5	8720	50600	7.8	7.7	8720	50600	0.6	8720	50600
	102	14.3	14.1	8720	50600	9.7	9.6	8720	50600	7.1	7.1	8720	50600	0.5	8720	50600
	112	13.0	12.8	8720	50600	8.8	8.7	8720	50600	6.5	6.4	8720	50600	0.5	8720	50600
	123	11.8	11.7	8720	50600	8.0	8.0	8720	50600	5.9	5.9	8720	50600	0.5	8720	50600
	138	10.6	10.4	8720	50600	7.1	7.1	8720	50600	5.3	5.2	8720	50600	0.4	8720	50600
	151	9.6	9.6	8720	50600	6.5	6.5	8720	50600	4.8	4.8	8720	50600	0.4	8720	50600
	163	8.9	8.8	8720	50600	6.1	6.0	8720	50600	4.5	4.4	8720	50600	0.4	8720	50600
	179	8.1	8.1	8720	50600	5.5	5.5	8720	50600	4.1	4.0	8720	50600	0.3	8720	50600
	189	7.7	7.6	8720	50600	5.2	5.1	8720	50600	3.9	3.8	8720	50600	0.3	8720	50600
	207	7.0	7.0	8720	50600	4.8	4.7	8720	50600	3.5	3.5	8720	50600	0.3	8720	50600
	227	6.4	6.3	8720	50600	4.4	4.3	8720	50600	3.2	3.1	8720	50600	0.3	8720	50600
	249	5.9	5.8	8720	50600	4.0	4.0	8720	50600	2.9	2.9	8720	50600	0.2	8720	50600
	278	5.3	5.2	8720	50600	3.6	3.5	8720	50600	2.6	2.6	8720	50600	0.2	8720	50600
	305	4.8	4.8	8720	50600	3.3	3.2	8720	50600	2.4	2.4	8720	50600	0.2	8720	50600
4E170 [Dimension Drawings from page 198]	11	131.9	41.5 ※	2650	54900	89.1	41.5	3920	59100	65.5	30.9	3970	65700	4.6	3980	98000
	13	111.6	41.5 ※	3230	57100	75.4	41.5	4770	60900	55.4	30.9	4840	67900	3.9	4850	96200
	14	103.6	41.5 ※	3530	58000	70.0	41.5	5220	61600	51.5	30.9	5290	68900	3.6	5300	95300
	16	90.7	41.5 ※	4030	59300	61.3	41.5	5970	62600	45.0	30.9	6050	70100	3.2	6060	93800
	18	80.6	41.5 ※	4410	60200	54.5	41.5	6530	63200	40.0	30.9	6610	70900	2.8	6630	92700
	19	76.4	33.9	3950	63600	51.6	33.4	5760	67700	37.9	24.6	5780	75800	2.7	5780	94400
	26	55.8	33.9	5270	66500	37.7	33.9	7800	69400	27.7	25.1	7860	78100	2.0	7840	90200
	42	34.6	27.3	6900	74600	23.4	21.0	7850	83700	17.2	15.4	7830	90300	1.2	7840	90300
	48	30.3	25.5	7430	77200	20.5	18.2	7850	88300	15.0	13.4	7850	90200	1.1	7860	90200
	53	27.4	25.5	8130	77900	18.5	18.2	8590	88700	13.6	13.4	8590	88700	1.0	8590	88700
	54	26.9	19.7	6510	83700	18.2	16.1	7870	90200	13.4	11.8	7850	90200	1.0	7860	90200
	60	24.2	19.7	7100	84800	16.4	16.1	8590	88700	12.0	11.8	8590	88700	0.9	8590	88700
	67	21.7	18.6	7580	87100	14.7	13.0	7860	90200	10.8	9.6	7860	90200	0.8	7860	90200
	74	19.6	18.6	8290	88200	13.3	13.0	8590	88700	9.8	9.6	8590	88700	0.7	8590	88700
	80	18.2	15.6	7570	90800	12.3	10.9	7860	90200	9.0	8.1	7860	90200	0.7	7860	90200
	88	16.5	15.6	8280	89400	11.2	10.9	8590	88700	8.2	8.1	8590	88700	0.6	8590	88700
	93	15.6	13.5	7610	90700	10.6	9.4	7850	90200	7.8	6.9	7850	90200	0.6	7860	90200
	102	14.3	13.5	8290	89300	9.7	9.5	8590	88700	7.1	7.0	8590	88700	0.5	8590	88700
	112	13.0	11.2	7590	90800	8.8	7.9	7860	90200	6.5	5.8	7860	90200	0.5	7860	90200
	123	11.8	11.2	8300	89300	8.0	7.9	8590	88700	5.9	5.8	8590	88700	0.5	8590	88700
	138	10.6	9.1	7590	90800	7.1	6.4	7860	90200	5.3	4.7	7860	90200	0.4	7850	90200
	151	9.6	9.1	8300	89300	6.5	6.4	8590	88700	4.8	4.7	8590	88700	0.4	8590	88700
	163	8.9	7.7	7590	90700	6.1	5.4	7860	90200	4.5	3.9	7860	90200	0.4	7850	90200
	179	8.1	7.7	8300	89300	5.5	5.4	8590	88700	4.1	4.0	8590	88700	0.3	8590	88700
	189	7.7	6.6	7590	90700	5.2	4.6	7850	90200	3.9	3.4	7850	90200	0.3	7850	90200
	207	7.0	6.7	8300	89300	4.8	4.7	8590	88700	3.5	3.4	8590	88700	0.3	8590	88700
	227	6.4	5.5	7590	90800	4.4	3.9	7860	90200	3.2	2.8	7860	90200	0.3	7840	90200
	249	5.9	5.5	8310	89300	4.0	3.9	8590	88700	2.9	2.9	8590	88700	0.2	8590	88700
	278	5.3	4.6	7730	90500	3.6	3.1	7850	90200	2.6	2.3	7860	90200	0.2	7840	90200
	305	4.8	4.6	8450	89000	3.3	3.2	8590	88700	2.4	2.4	8590	88700	0.2	8590	88700

Selection Tables for Reducers (50Hz Input)

■ **IMPORTANT**: Please refer to page 144 for Reducer Selection Table notes.

Size	n1	1450				980				720				50		
	Ratio i	n2 [rpm]	P1 [kW]	Tout [Nm]	Pro [N]	n2 [rpm]	P1 [kW]	Tout [Nm]	Pro [N]	n2 [rpm]	P1 [kW]	Tout [Nm]	Pro [N]	n2 [rpm]	Tout [Nm]	Pro [N]
4E175 [Dimension Drawings from page 198]	11	131.9	45.0 ※	2870	96200	89.1	42.1	3970	58900	65.5	30.9	3970	65700	4.6	3980	98000
	13	111.6	45.0 ※	3500	56300	75.4	42.1	4840	60700	55.4	30.9	4840	67900	3.9	4850	95300
	14	103.6	45.0 ※	3830	57100	70.0	42.1	5300	61400	51.5	30.9	5290	68900	3.6	5300	93800
	16	90.7	45.0 ※	4370	58300	61.3	42.1	6050	62400	45.0	30.9	6050	70100	3.2	6060	92700
	18	80.6	45.0 ※	4780	59100	54.5	42.1	6620	62900	40.0	30.9	6610	70900	2.8	6630	92700
	19	76.4	37.0	4310	62500	51.6	33.4	5760	67700	37.9	24.6	5780	75800	2.7	5780	94400
	26	55.8	37.0	5750	65100	37.7	35.1	8070	68600	27.7	25.8	8080	77500	2.0	8070	89800
	42	34.6	30.1	7600	72500	23.4	26.2	9790	78100	17.2	19.2	9770	86400	1.2	9820	86300
	48	30.3	30.1	8770	73400	20.5	22.3	9620	83200	15.0	16.7	9800	86300	1.1	9810	86300
	53	27.4	30.1	9590	73700	18.5	20.8	9830	85600	13.6	15.3	9830	86300	1.0	9830	86300
	54	26.9	24.1	7960	79500	18.2	20.0	9780	86400	13.4	14.7	9780	86400	1.0	9770	86400
	60	24.2	24.1	8690	80200	16.4	18.4	9830	86300	12.0	13.5	9830	86300	0.9	9830	86300
	67	21.7	23.6	9620	81200	14.7	16.2	9780	86400	10.8	11.9	9780	86400	0.8	9780	86400
	74	19.6	22.0	9830	83800	13.3	14.9	9830	86300	9.8	10.9	9830	86300	0.7	9830	86300
	80	18.2	19.5	9470	87000	12.3	13.6	9780	86400	9.0	10.0	9780	86400	0.7	9780	86400
	88	16.5	18.5	9830	86300	11.2	12.5	9830	86300	8.2	9.2	9830	86300	0.6	9830	86300
	93	15.6	17.4	9810	86300	10.6	11.7	9760	86400	7.8	8.6	9780	86400	0.6	9790	86400
	102	14.3	15.9	9830	86300	9.7	10.8	9830	86300	7.1	8.0	9830	86300	0.5	9830	86300
	112	13.0	14.4	9780	86400	8.8	9.8	9780	86400	6.5	7.2	9780	86400	0.5	9780	86400
	123	11.8	14.4	10700	84500	8.0	9.8	10700	84500	5.9	7.2	10700	84500	0.5	10700	84500
	138	10.6	11.3	9440	87100	7.1	7.9	9780	86400	5.3	5.8	9780	86400	0.4	9790	86400
	151	9.6	11.3	10300	85300	6.5	8.0	10700	84500	4.8	5.9	10700	84500	0.4	10700	84500
	163	8.9	9.9	9780	86400	6.1	6.7	9780	86400	4.5	4.9	9780	86400	0.4	9770	86400
	179	8.1	9.9	10700	84500	5.5	6.7	10700	84500	4.1	4.9	10700	84500	0.3	10700	84500
	189	7.7	8.3	9500	86900	5.2	5.8	9790	86400	3.9	4.2	9790	86400	0.3	9770	86400
	207	7.0	8.3	10400	85200	4.8	5.8	10700	84500	3.5	4.3	10700	84500	0.3	10700	84500
	227	6.4	7.0	9630	86700	4.4	4.8	9780	86400	3.2	3.5	9780	86400	0.3	9800	86300
	249	5.9	7.0	10500	84900	4.0	4.8	10700	84500	2.9	3.6	10700	84500	0.2	10700	84500
	278	5.3	5.6	9500	86900	3.6	3.9	9780	86400	2.6	2.9	9770	86400	0.2	9810	86300
	305	4.8	5.7	10400	85200	3.3	4.0	10700	84500	2.4	2.9	10700	84500	0.2	10700	84500
4E180 [Dimension Drawings from page 198]	11	131.9	53.4 ※	3400	52700	89.1	53.4	5040	55800	65.5	41.1	5280	61900	4.6	5270	95400
	13	111.6	53.4 ※	4150	54400	75.4	53.4	6140	56900	55.4	41.1	6430	63300	3.9	6420	93100
	14	103.6	53.4 ※	4540	55100	70.0	53.4	6720	57300	51.5	41.1	7040	63800	3.6	7030	91900
	16	90.7	53.4 ※	5190	56000	61.3	53.4	7680	57700	45.0	41.1	8040	64300	3.2	8030	89900
	18	80.6	53.4 ※	5670	56500	54.5	53.4	8400	57800	40.0	41.1	8800	64600	2.8	8780	88400
	19	76.4	41.5 ※	4840	61000	51.6	41.5	7160	63600	37.9	30.9	7260	71500	2.7	7270	91400
	21	69.1	41.5 ※	5290	61700	46.7	41.5	7830	64000	34.3	30.9	7940	72100	2.4	7950	90000
	22	66.0	41.5 ※	5640	62200	44.6	37.4	7530	66500	32.8	27.5	7530	75100	2.3	7530	90900
	25	58.0	41.5 ※	6170	62800	39.2	37.4	8230	66900	28.8	27.5	8240	75700	2.0	8240	89500
	26	55.8	41.5 ※	6450	63100	37.7	33.3	7660	69800	27.7	24.4	7640	78700	2.0	7660	90600
	28	51.8	41.5 ※	7060	63600	35.0	33.3	8380	70300	25.8	24.4	8360	79400	1.8	8380	89200
	35	41.5	41.5 ※	8870	64300	28.0	36.7	11600	67600	20.6	26.9	11600	77400	1.5	11600	82000
	39	37.2	41.5	9700	64400	25.2	33.5	11600	70400	18.5	24.6	11600	80500	1.3	11600	82000
	42	34.6	41.5	10500	64300	23.4	31.0	11600	72800	17.2	22.8	11600	82000	1.2	11600	82000
	46	31.6	41.5	11500	64000	21.3	28.4	11600	75700	15.7	20.8	11600	82000	1.1	11600	82000
	48	30.3	32.4	9440	71400	20.5	26.9	11600	77500	15.0	19.8	11600	82000	1.1	11600	82000
	53	27.4	32.4	10300	71600	18.5	24.6	11600	80500	13.6	18.1	11600	82000	1.0	11600	82000
	54	26.9	30.6	10100	73300	18.2	23.7	11600	81700	13.4	17.4	11600	82000	1.0	11600	82000
	60	24.2	30.6	11100	73400	16.4	21.7	11600	82000	12.0	15.9	11600	82000	0.9	11600	82000
	67	21.7	28.4	11600	75700	14.7	19.2	11600	82000	10.8	14.1	11600	82000	0.8	11600	82000
	74	19.6	26.0	11600	78700	13.3	17.6	11600	82000	9.8	12.9	11600	82000	0.7	11600	82000
	80	18.2	23.9	11600	81500	12.3	16.1	11600	82000	9.0	11.9	11600	82000	0.7	11600	82000
	88	16.5	21.8	11600	82000	11.2	14.8	11600	82000	8.2	10.8	11600	82000	0.6	11600	82000
	93	15.6	19.5	11000	84000	10.6	13.9	11600	82000	7.8	10.2	11600	82000	0.6	11600	82000
	102	14.3	18.8	11600	82000	9.7	12.7	11600	82000	7.1	9.4	11600	82000	0.5	11600	82000
	112	13.0	17.1	11600	82000	8.8	11.5	11600	82000	6.5	8.5	11600	82000	0.5	11600	82000
	123	11.8	15.6	11600	82000	8.0	10.5	11600	82000	5.9	7.8	11600	82000	0.5	11600	82000
	138	10.6	13.9	11600	82000	7.1	9.4	11600	82000	5.3	6.9	11600	82000	0.4	11600	82000
	151	9.6	12.7	11600	82000	6.5	8.6	11600	82000	4.8	6.3	11600	82000	0.4	11600	82000
	163	8.9	11.7	11600	82000	6.1	7.9	11600	82000	4.5	5.8	11600	82000	0.4	11600	82000
	179	8.1	10.7	11600	82000	5.5	7.3	11600	82000	4.1	5.4	11600	82000	0.3	11600	82000

Selection Tables for Reducers (50Hz Input)

■**IMPORTANT**: Please refer to page 144 for Reducer Selection Table notes.

Size	n1	1450				980				720				50		
	Ratio i	n2 [rpm]	P1 [kW]	Tout [Nm]	Pro [N]	n2 [rpm]	P1 [kW]	Tout [Nm]	Pro [N]	n2 [rpm]	P1 [kW]	Tout [Nm]	Pro [N]	n2 [rpm]	Tout [Nm]	Pro [N]
4E180 [Dimension Drawings from page 198]	189	7.7	9.8	11200	83600	5.2	6.8	11600	82000	3.9	5.0	11600	82000	0.3	11600	82000
	207	7.0	9.3	11600	82000	4.8	6.3	11600	82000	3.5	4.6	11600	82000	0.3	11600	82000
	227	6.4	8.49	11600	82000	4.4	5.7	11600	82000	3.2	4.2	11600	82000	0.3	11600	82000
	249	5.9	7.7	11600	82000	4.0	5.2	11600	82000	2.9	3.9	11600	82000	0.2	11600	82000
	278	5.3	6.9	11600	82000	3.6	4.6	11600	82000	2.6	3.4	11600	82000	0.2	11600	82000
	305	4.8	6.3	11600	82000	3.3	4.3	11600	82000	2.4	3.2	11600	82000	0.2	11600	82000
4E185 [Dimension Drawings from page 198]	11	131.9	60.0 ※	3830	51500	89.1	55.9	5270	55100	65.5	41.1	5280	61900	4.6	5270	95400
	13	111.6	60.0 ※	4660	52900	75.4	55.9	6430	56100	55.4	41.1	6430	63300	3.9	6420	93100
	14	103.6	60.0 ※	5100	53500	70.0	55.9	7030	56400	51.5	41.1	7040	63800	3.6	7030	91900
	16	90.7	60.0 ※	5830	54100	61.3	55.9	8040	56600	45.0	41.1	8040	64300	3.2	8030	89900
	18	80.6	60.0 ※	6380	54500	54.5	55.9	8790	56600	40.0	41.1	8800	64600	2.8	8780	88400
	19	76.4	45.0 ※	5250	59800	51.6	42.8	7380	63000	37.9	31.4	7370	71200	2.7	7370	91200
	21	69.1	45.0 ※	5740	60400	46.7	42.8	8080	63300	34.3	31.4	8060	71700	2.4	8060	89800
	22	66.0	45.0 ※	6120	60800	44.6	38.0	7650	66200	32.8	27.9	7640	74800	2.3	7650	90600
	25	58.0	45.0 ※	6690	61300	39.2	38.0	8360	66600	28.8	27.9	8360	75400	2.0	8370	89200
	26	55.8	45.0 ※	7000	61500	37.7	33.8	7770	69500	27.7	24.8	7760	78400	2.0	7750	90400
	28	51.8	45.0 ※	7650	61900	35.0	33.8	8500	69900	25.8	24.8	8490	79000	1.8	8480	89000
	35	41.5	45.0 ※	9620	62100	28.0	36.7	11600	67600	20.6	26.9	11600	77400	1.5	11600	82000
	39	37.2	45.0	10500	62000	25.2	33.5	11600	70400	18.5	24.6	11600	80500	1.3	11600	82000
	42	34.6	45.0	11400	61700	23.4	31.0	11600	72800	17.2	23.0	11600	82000	1.2	11600	82000
	46	31.6	41.8	11500	63800	21.3	28.4	11600	75700	15.7	20.8	11600	82000	1.1	11600	82000
	48	30.3	39.0	11400	65800	20.5	26.9	11600	77500	15.0	19.8	11600	82000	1.1	11600	82000
	53	27.4	36.4	11600	67900	18.5	24.6	11600	80500	13.6	18.1	11600	82000	1.0	11600	82000
	54	26.9	35.1	11600	69000	18.2	23.7	11600	81700	13.4	17.4	11600	82000	1.0	11600	82000
	60	24.2	32.1	11600	71800	16.4	21.7	11600	82000	12.0	15.9	11600	82000	0.9	11600	82000
	67	21.7	28.4	11600	75700	14.7	19.2	11600	82000	10.8	14.1	11600	82000	0.8	11600	82000
	74	19.6	26.0	11600	78700	13.3	17.6	11600	82000	9.8	12.9	11600	82000	0.7	11600	82000
	80	18.2	23.9	11600	81500	12.3	16.1	11600	82000	9.0	11.9	11600	82000	0.7	11600	82000
	88	16.5	21.8	11600	82000	11.2	14.8	11600	82000	8.2	10.8	11600	82000	0.6	11600	82000
	93	15.6	20.6	11600	82000	10.6	13.9	11600	82000	7.8	10.2	11600	82000	0.6	11600	82000
	102	14.3	18.8	11600	82000	9.7	12.7	11600	82000	7.1	9.4	11600	82000	0.5	11600	82000
	112	13.0	17.1	11600	82000	8.8	11.5	11600	82000	6.5	8.5	11600	82000	0.5	11600	82000
	123	11.8	15.6	11600	82000	8.0	10.5	11600	82000	5.9	7.8	11600	82000	0.5	11600	82000
	138	10.6	13.9	11600	82000	7.1	9.4	11600	82000	5.3	6.9	11600	82000	0.4	11600	82000
	151	9.6	12.7	11600	82000	6.5	8.6	11600	82000	4.8	6.3	11600	82000	0.4	11600	82000
	163	8.9	11.7	11600	82000	6.1	7.9	11600	82000	4.5	5.8	11600	82000	0.4	11600	82000
	179	8.1	10.7	11600	82000	5.5	7.3	11600	82000	4.1	5.4	11600	82000	0.3	11600	82000
	189	7.7	10.1	11600	82000	5.2	6.8	11600	82000	3.9	5.0	11600	82000	0.3	11600	82000
	207	7.0	9.3	11600	82000	4.8	6.3	11600	82000	3.5	4.6	11600	82000	0.3	11600	82000
	227	6.4	8.4	11600	82000	4.4	5.7	11600	82000	3.2	4.2	11600	82000	0.3	11600	82000
	249	5.9	7.7	11600	82000	4.0	5.2	11600	82000	2.9	3.9	11600	82000	0.2	11600	82000
	278	5.3	6.9	11600	82000	3.6	4.6	11600	82000	2.6	3.4	11600	82000	0.2	11600	82000
	305	4.8	6.3	11600	82000	3.3	4.3	11600	82000	2.4	3.2	11600	82000	0.2	11600	82000
4E190 [Dimension Drawings from page 198]	11	131.9	68.4 ※	4360	50000	89.1	68.4	6450	51700	65.5	66.1	8490	52700	4.6	8670	88600
	13	111.6	68.4 ※	5320	51000	75.4	68.4	7870	51900	55.4	65.6	10300	52300	3.9	10600	84800
	14	103.6	68.4 ※	5820	51400	70.0	68.4	8600	51900	51.5	60.4	10300	54300	3.6	11600	82400
	16	90.7	68.4 ※	6650	51800	61.3	68.4	9830	51400	45.0	58.1	11400	54700	3.2	11600	82000
	18	80.6	68.4 ※	7270	51900	54.5	66.4	10400	51900	40.0	53.5	11500	56900	2.8	11600	82000
	19	76.4	50.6 ※	5900	57900	51.6	50.6	8730	59100	37.9	38.7	9090	66300	2.7	9100	87700
	21	69.1	50.6 ※	6450	58400	46.7	50.6	9550	59100	34.3	38.7	9940	66300	2.4	9950	86000
	22	66.0	50.6 ※	6880	58600	44.6	46.5	9360	61300	32.8	34.1	9340	69800	2.3	9350	87200
	25	58.0	50.6 ※	7530	58900	39.2	46.5	10200	61200	28.8	34.1	10200	70000	2.0	10200	85500
	26	55.8	50.6 ※	7870	59000	37.7	41.3	9500	64500	27.7	30.3	9490	73400	2.0	9510	86900
	28	51.8	50.6 ※	8600	59100	35.0	41.3	10400	64400	25.8	30.3	10400	73600	1.8	10400	85100
	35	41.5	50.6 ※	10800	58700	28.0	36.7	11600	67600	20.6	26.9	11600	77400	1.5	11600	82000
	39	37.2	48.2	11300	59900	25.2	33.5	11600	70400	18.5	24.6	11600	80500	1.3	11600	82000
	42	34.6	45.9	11600	61000	23.4	31.0	11600	72800	17.2	22.8	11600	82000	1.2	11600	82000
	46	31.6	42.0	11600	63600	21.3	28.4	11600	75700	15.7	20.8	11600	82000	1.1	11600	82000
	48	30.3	39.8	11600	65200	20.5	26.9	11600	77500	15.0	19.8	11600	82000	1.1	11600	82000
	53	27.4	36.4	11600	67900	18.5	24.6	11600	80500	13.6	18.1	11600	82000	1.0	11600	82000
	54	26.9	35.1	11600	69000	18.2	23.7	11600	81700	13.4	17.4	11600	82000	1.0	11600	82000
	60	24.2	32.1	11600	71800	16.4	21.7	11600	82000	12.0	15.9	11600	82000	0.9	11600	82000

Selection Tables for Reducers (50Hz Input)

■**IMPORTANT**: Please refer to page 144 for Reducer Selection Table notes.

Size	n1	1450				980				720				50		
	Ratio i	n2 [rpm]	P1 [kW]	Tout [Nm]	Pro [N]	n2 [rpm]	P1 [kW]	Tout [Nm]	Pro [N]	n2 [rpm]	P1 [kW]	Tout [Nm]	Pro [N]	n2 [rpm]	Tout [Nm]	Pro [N]
4E190 [Dimension Drawings from page 198]	67	21.7	28.4	11600	75700	14.7	19.2	11600	82000	10.8	14.1	11600	82000	0.8	11600	82000
	74	19.6	26.0	11600	78700	13.3	17.6	11600	82000	9.8	12.9	11600	82000	0.7	11600	82000
	80	18.2	23.9	11600	81500	12.3	16.1	11600	82000	9.0	11.9	11600	82000	0.7	11600	82000
	88	16.5	21.8	11600	82000	11.2	14.8	11600	82000	8.2	10.8	11600	82000	0.6	11600	82000
	93	15.6	20.6	11600	82000	10.6	13.9	11600	82000	7.8	10.2	11600	82000	0.6	11600	82000
	102	14.3	18.8	11600	82000	9.7	12.7	11600	82000	7.1	9.4	11600	82000	0.5	11600	82000
	112	13.0	17.1	11600	82000	8.8	11.5	11600	82000	6.5	8.5	11600	82000	0.5	11600	82000
	123	11.8	15.6	11600	82000	8.0	10.5	11600	82000	5.9	7.8	11600	82000	0.5	11600	82000
	138	10.6	13.9	11600	82000	7.1	9.4	11600	82000	5.3	6.9	11600	82000	0.4	11600	82000
	151	9.6	12.7	11600	82000	6.5	8.6	11600	82000	4.8	6.3	11600	82000	0.4	11600	82000
	163	8.9	11.7	11600	82000	6.1	7.9	11600	82000	4.5	5.8	11600	82000	0.4	11600	82000
	179	8.1	10.7	11600	82000	5.5	7.3	11600	82000	4.1	5.4	11600	82000	0.3	11600	82000
	189	7.7	10.1	11600	82000	5.2	6.8	11600	82000	3.9	5.0	11600	82000	0.3	11600	82000
	207	7.0	9.3	11600	82000	4.8	6.3	11600	82000	3.5	4.6	11600	82000	0.3	11600	82000
	227	6.4	8.4	11600	82000	4.4	5.7	11600	82000	3.2	4.2	11600	82000	0.3	11600	82000
	249	5.9	7.7	11600	82000	4.0	5.2	11600	82000	2.9	3.9	11600	82000	0.2	11600	82000
	278	5.3	6.9	11600	82000	3.6	4.6	11600	82000	2.6	3.41	11600	82000	0.2	11600	82000
	305	4.8	6.3	11600	82000	3.3	4.3	11600	82000	2.4	3.2	11600	82000	0.2	11600	82000
4E195 [Dimension Drawings from page 198]	11	131.9	75.0 ※	4780	48700	89.1	75.0	7080	49900	65.5	66.1	8490	52700	4.6	8670	88600
	13	111.6	75.0 ※	5830	49500	75.4	75.0	8630	49700	55.4	65.6	10300	52300	3.9	10600	84800
	14	103.6	75.0 ※	6380	49800	70.0	74.9	9430	49500	51.5	60.4	10300	54300	3.6	11600	82400
	16	90.7	75.0 ※	7290	49900	61.3	72.1	10400	49900	45.0	58.1	11400	54700	3.2	11600	82000
	18	80.6	75.0 ※	7970	49900	54.5	66.4	10400	51900	40.0	53.5	11500	56900	2.8	11600	82000
	19	76.4	55.0 ※	6410	56400	51.6	53.7	9260	57600	37.9	39.4	9250	65700	2.7	9260	87400
	21	69.1	55.0 ※	7010	56800	46.7	53.7	10100	57400	34.3	39.4	10100	65800	2.4	10100	85700
	22	66.0	55.0 ※	7480	56900	44.6	47.4	9540	60800	32.8	34.8	9530	69300	2.3	9550	86800
	25	58.0	55.0 ※	8180	57000	39.2	47.4	10400	60600	28.8	34.8	10400	69400	2.0	10400	85100
	26	55.8	55.0 ※	8550	57000	37.7	42.1	9680	63900	27.7	30.9	9670	72800	2.0	9690	86600
	28	51.8	55.0 ※	9350	56900	35.0	42.1	10600	63900	25.8	30.9	10600	73000	1.8	10600	84700
	35	41.5	52.2 ※	11200	57700	28.0	36.7	11600	67600	20.6	26.9	11600	77400	1.5	11600	82000
	39	37.2	48.2	11300	59900	25.2	33.5	11600	70400	18.5	24.6	11600	80500	1.3	11600	82000
	42	34.6	45.9	11600	61000	23.4	31.0	11600	72800	17.2	22.8	11600	82000	1.2	11600	82000
	46	31.6	42.0	11600	63600	21.3	28.4	11600	75700	15.7	20.8	11600	82000	1.1	11600	82000
	48	30.3	39.8	11600	65200	20.5	26.9	11600	77500	15.0	19.8	11600	82000	1.1	11600	82000
	53	27.4	36.4	11600	67900	18.5	24.6	11600	80500	13.6	18.1	11600	82000	1.0	11600	82000
	54	26.9	35.1	11600	69000	18.2	23.7	11600	81700	13.4	17.4	11600	82000	1.0	11600	82000
	60	24.2	32.1	11600	71800	16.4	21.7	11600	82000	12.0	15.9	11600	82000	0.9	11600	82000
	67	21.7	28.4	11600	75700	14.7	19.2	11600	82000	10.8	14.1	11600	82000	0.8	11600	82000
	74	19.6	26.0	11600	78700	13.3	17.6	11600	82000	9.8	12.9	11600	82000	0.7	11600	82000
	80	18.2	23.9	11600	81500	12.3	16.1	11600	82000	9.0	11.9	11600	82000	0.7	11600	82000
	88	16.5	21.8	11600	82000	11.2	14.8	11600	82000	8.2	10.8	11600	82000	0.6	11600	82000
	93	15.6	20.6	11600	82000	10.6	13.9	11600	82000	7.8	10.2	11600	82000	0.6	11600	82000
	102	14.3	18.8	11600	82000	9.7	12.7	11600	82000	7.1	9.4	11600	82000	0.5	11600	82000
	112	13.0	17.1	11600	82000	8.8	11.5	11600	82000	6.5	8.5	11600	82000	0.5	11600	82000
	123	11.8	15.6	11600	82000	8.0	10.5	11600	82000	5.9	7.8	11600	82000	0.5	11600	82000
	138	10.6	13.9	11600	82000	7.1	9.4	11600	82000	5.3	6.9	11600	82000	0.4	11600	82000
	151	9.6	12.7	11600	82000	6.5	8.6	11600	82000	4.8	6.3	11600	82000	0.4	11600	82000
	163	8.9	11.7	11600	82000	6.1	7.9	11600	82000	4.5	5.8	11600	82000	0.4	11600	82000
	179	8.1	10.7	11600	82000	5.5	7.3	11600	82000	4.1	5.4	11600	82000	0.3	11600	82000
	189	7.7	10.1	11600	82000	5.2	6.8	11600	82000	3.9	5.0	11600	82000	0.3	11600	82000
	207	7.0	9.3	11600	82000	4.8	6.3	11600	82000	3.5	4.6	11600	82000	0.3	11600	82000
	227	6.4	8.4	11600	82000	4.4	5.7	11600	82000	3.2	4.2	11600	82000	0.3	11600	82000
	249	5.9	7.7	11600	82000	4.0	5.2	11600	82000	2.9	3.9	11600	82000	0.2	11600	82000
	278	5.3	6.9	11600	82000	3.6	4.6	11600	82000	2.6	3.4	11600	82000	0.2	11600	82000
	305	4.8	6.3	11600	82000	3.3	4.3	11600	82000	2.4	3.2	11600	82000	0.2	11600	82000
4F180 [Dimension Drawings from page 198]	11	131.9	53.4 ※	3400	94700	89.1	53.4	5040	103000	65.5	41.1	5280	114000	4.6	5270	134000
	13	111.6	53.4 ※	4150	99000	75.4	53.4	6140	107000	55.4	41.1	6430	119000	3.9	6420	132000
	14	103.6	53.4 ※	4540	101000	70.0	53.4	6720	110000	51.5	41.1	7040	121000	3.6	7030	131000
	16	90.7	53.4 ※	5190	104000	61.3	53.4	7680	112000	45.0	41.1	8040	124000	3.2	8030	129000
	18	80.6	53.4 ※	5670	106000	54.5	53.4	8400	114000	40.0	41.1	8800	126000	2.8	8780	128000
	19	76.4	41.5 ※	4840	111000	51.6	41.5	7160	121000	37.9	30.9	7260	131000	2.7	7270	131000
	21	69.1	41.5 ※	5290	114000	46.7	41.5	7830	123000	34.3	30.9	7940	130000	2.4	7950	130000

Selection Tables for Reducers (50Hz Input)

■ **IMPORTANT**: Please refer to page 144 for Reducer Selection Table notes.

Size	n1	1450				980				720				50		
	Ratio i	n2 [rpm]	P1 [kW]	Tout [Nm]	Pro [N]	n2 [rpm]	P1 [kW]	Tout [Nm]	Pro [N]	n2 [rpm]	P1 [kW]	Tout [Nm]	Pro [N]	n2 [rpm]	Tout [Nm]	Pro [N]
4F180 [Dimension Drawings from page 198]	22	66.0	41.5 ※	5640	115000	44.6	37.4	7530	126000	32.8	27.5	7530	130000	2.3	7530	130000
	25	58.0	41.5 ※	6170	117000	39.2	37.4	8230	129000	28.8	27.5	8240	129000	2.0	8240	129000
	26	55.8	41.5 ※	6450	118000	37.7	33.3	7660	130000	27.7	24.4	7640	130000	2.0	7660	130000
	28	51.8	41.5 ※	7060	121000	35.0	33.3	8380	129000	25.8	24.4	8360	129000	1.8	8380	129000
	35	41.5	41.5 ※	8870	126000	28.0	39.9	12600	122000	20.6	29.3	12600	122000	1.5	12600	122000
	39	37.2	41.5	9700	127000	25.2	39.9	13800	120000	18.5	29.3	13800	120000	1.3	13800	120000
	42	34.6	41.5	10500	125000	23.4	33.7	12600	122000	17.2	24.8	12600	122000	1.2	12600	122000
	46	31.6	41.5	11500	124000	21.3	33.7	13800	120000	15.7	24.8	13800	120000	1.1	13800	120000
	48	30.3	32.4	9440	127000	20.5	29.2	12600	122000	15.0	21.5	12600	122000	1.1	12600	122000
	53	27.4	32.4	10300	126000	18.5	29.2	13800	120000	13.6	21.5	13800	120000	1.0	13800	120000
	54	26.9	30.6	10100	126000	18.2	25.8	12600	122000	13.4	19.0	12600	122000	1.0	12600	122000
	60	24.2	30.6	11100	124000	16.4	25.8	13800	120000	12.0	19.0	13800	120000	0.9	13800	120000
	67	21.7	30.0	12200	122000	14.7	20.8	12600	122000	10.8	15.3	12600	122000	0.8	12500	122000
	74	19.6	30.0	13400	120000	13.3	20.8	13700	120000	9.8	15.3	13800	120000	0.7	13700	120000
	80	18.2	24.1	11700	123000	12.3	17.5	12600	122000	9.0	12.9	12600	122000	0.7	12600	122000
	88	16.5	24.1	12800	121000	11.2	17.5	13800	120000	8.2	12.9	13800	120000	0.6	13800	120000
	93	15.6	19.5	11000	124000	10.6	15.1	12600	122000	7.8	11.1	12600	122000	0.6	12600	122000
	102	14.3	19.5	12000	123000	9.7	15.1	13800	120000	7.1	11.1	13800	120000	0.5	13800	120000
	112	13.0	18.5	12600	122000	8.8	12.5	12600	122000	6.5	9.2	12600	122000	0.5	12600	122000
	123	11.8	18.5	13800	120000	8.0	12.5	13800	120000	5.9	9.2	13800	120000	0.5	13800	120000
	138	10.6	15.1	12600	122000	7.1	10.2	12600	122000	5.3	7.5	12600	122000	0.4	12600	122000
	151	9.6	15.1	13800	120000	6.5	10.2	13800	120000	4.8	7.5	13800	120000	0.4	13800	122000
	163	8.9	12.0	11900	123000	6.1	8.6	12600	122000	4.5	6.3	12600	122000	0.4	12600	122000
	179	8.1	12.0	13000	121000	5.5	8.6	13800	120000	4.1	6.3	13800	120000	0.3	13800	120000
	189	7.7	9.8	11200	124000	5.2	7.4	12600	122000	3.9	5.5	12600	122000	0.3	12600	122000
	207	7.0	9.8	12200	122000	4.8	7.5	13800	120000	3.5	5.5	13800	120000	0.3	13700	120000
	227	6.4	8.8	12100	122000	4.4	6.2	12600	122000	3.2	4.5	12600	122000	0.3	12600	122000
	249	5.9	8.8	13300	120000	4.0	6.2	13800	120000	2.9	4.6	13800	120000	0.2	13700	120000
	278	5.3	7.2	12100	123000	3.6	5.0	12600	122000	2.6	3.7	12600	122000	0.2	12600	122000
	305	4.8	7.2	13200	121000	3.3	5.1	13800	120000	2.4	3.7	13800	120000	0.2	13800	120000
4F185 [Dimension Drawings from page 198]	11	131.9	60.0 ※	3830	93600	89.1	55.9	5270	103000	65.5	41.1	5280	114000	4.6	5270	134000
	13	111.6	60.0 ※	4660	97600	75.4	55.9	6430	107000	55.4	41.1	6430	119000	3.9	6420	132000
	14	103.6	60.0 ※	5100	99600	70.0	55.9	7030	109000	51.5	41.1	7040	121000	3.6	7030	131000
	16	90.7	60.0 ※	5830	102000	61.3	55.9	8040	111000	45.0	41.1	8040	124000	3.2	8030	129000
	18	80.6	60.0 ※	6380	104000	54.5	55.9	8790	113000	40.0	41.1	8800	126000	2.8	8780	128000
	19	76.4	45.0 ※	5250	110000	51.6	42.8	7380	120000	37.9	31.4	7370	131000	2.7	7370	131000
	21	69.1	45.0 ※	5740	113000	46.7	42.8	8080	122000	34.3	31.4	8060	129000	2.4	8060	129000
	22	66.0	45.0 ※	6120	114000	44.6	38.0	7650	126000	32.8	27.9	7640	130000	2.3	7650	130000
	25	58.0	45.0 ※	6690	116000	39.2	38.0	8360	128000	28.8	27.9	8360	129000	2.0	8370	129000
	26	55.8	45.0 ※	7000	117000	37.7	33.8	7770	130000	27.7	24.8	7760	130000	2.0	7750	130000
	28	51.8	45.0 ※	7650	119000	35.0	33.8	8500	129000	25.8	24.8	8490	129000	1.8	8480	129000
	35	41.5	45.0 ※	9620	124000	28.0	44.3	14000	119000	20.6	34.7	14900	118000	1.5	14900	118000
	39	37.2	45.0	10500	125000	25.2	44.3	15300	117000	18.5	34.7	16300	115000	1.3	16300	115000
	42	34.6	45.0	11400	124000	23.4	40.0	14800	118000	17.2	30.0	15200	117000	1.2	15200	117000
	46	31.6	45.0	12400	122000	21.3	39.7	16200	115000	15.7	29.9	16600	115000	1.1	16700	115000
	48	30.3	39.0	11400	124000	20.5	29.8	12900	121000	15.0	23.5	13800	120000	1.1	15300	117000
	53	27.4	39.0	12400	122000	18.5	29.8	14100	119000	13.6	23.5	15100	117000	1.0	16700	115000
	54	26.9	38.2	12600	122000	18.2	28.3	13800	120000	13.4	22.4	14900	118000	1.0	15500	117000
	60	24.2	38.2	13800	120000	16.4	28.3	15100	117000	12.0	22.4	16300	115000	0.9	17000	114000
	67	21.7	38.1	15500	117000	14.7	25.7	15500	117000	10.8	18.9	15500	117000	0.8	15500	117000
	74	19.6	38.1	17000	114000	13.3	25.7	17000	114000	9.8	18.9	17000	114000	0.7	17000	114000
	80	18.2	30.1	14600	118000	12.3	21.6	15500	117000	9.0	15.9	15600	117000	0.7	15500	117000
	88	16.5	30.1	16000	116000	11.2	21.6	17000	114000	8.2	15.9	17000	114000	0.6	16900	114000
	93	15.6	24.1	13600	120000	10.6	18.6	15500	117000	7.8	13.7	15500	117000	0.6	15500	117000
	102	14.3	24.1	14900	118000	9.7	18.6	17000	114000	7.1	13.7	17000	114000	0.5	17000	114000
	112	13.0	22.6	15400	117000	8.8	15.4	15500	117000	6.5	11.3	15500	117000	0.5	15500	117000
	123	11.8	22.6	16800	114000	8.0	15.4	16900	114000	5.9	11.3	16900	114000	0.5	17000	114000
	138	10.6	18.6	15500	117000	7.1	12.6	15600	117000	5.3	9.2	15500	117000	0.4	15500	117000
	151	9.6	18.6	17000	114000	6.5	12.6	17000	114000	4.8	9.3	17000	114000	0.4	17000	114000
	163	8.9	15.1	15000	118000	6.1	10.6	15500	117000	4.5	7.8	15500	117000	0.4	15500	117000
	179	8.1	15.1	16400	115000	5.5	10.6	17000	114000	4.1	7.8	17000	114000	0.3	17000	114000
	189	7.7	12.0	13800	120000	5.2	9.2	15500	117000	3.9	6.7	15500	117000	0.3	15500	117000

Selection Tables for Reducers (50Hz Input)

■**IMPORTANT**: Please refer to page 144 for Reducer Selection Table notes.

Size	n1	1450				980				720				50		
	Ratio i	n2 [rpm]	P1 [kW]	Tout [Nm]	Pro [N]	n2 [rpm]	P1 [kW]	Tout [Nm]	Pro [N]	n2 [rpm]	P1 [kW]	Tout [Nm]	Pro [N]	n2 [rpm]	Tout [Nm]	Pro [N]
4F185 [Dimension Drawings from page 198]	207	7.0	12.0	15000	117000	4.8	9.2	17000	114000	3.5	6.8	17000	114000	0.3	17000	114000
	227	6.4	9.8	13500	120000	4.4	6.9	14000	119000	3.2	5.1	14000	119000	0.3	14000	119000
	249	5.9	9.8	14800	118000	4.0	6.9	15300	117000	2.9	5.1	15300	117000	0.2	15300	117000
	278	5.3	8.6	14500	118000	3.6	6.2	15500	117000	2.6	4.6	15500	117000	0.2	15500	117000
	305	4.8	8.6	15900	116000	3.3	6.3	17000	114000	2.4	4.6	17000	114000	0.2	17000	114000
4F190 [Dimension Drawings from page 198]	11	131.9	68.4 ※	4360	92200	89.1	68.4	6450	99700	65.5	66.1	8490	106000	4.6	8670	128000
	13	111.6	68.4 ※	5320	95900	75.4	68.4	7870	103000	55.4	67.5	10600	108000	3.9	10600	125000
	14	103.6	68.4 ※	5820	97800	70.0	68.4	8600	105000	51.5	67.5	11600	109000	3.6	11600	123000
	16	90.7	68.4 ※	6650	100000	61.3	68.4	9830	106000	45.0	62.1	12200	113000	3.2	13200	121000
	18	80.6	68.4 ※	7270	102000	54.5	68.4	10800	108000	40.0	62.1	13300	114000	2.8	14500	118000
	19	76.4	50.6 ※	5900	109000	51.6	50.6	8730	117000	37.9	38.7	9090	128000	2.7	9100	128000
	21	69.1	50.6 ※	6450	111000	46.7	50.6	9550	119000	34.3	38.7	9940	126000	2.4	9950	126000
	22	66.0	50.6 ※	6880	112000	44.6	46.5	9360	122000	32.8	34.1	9340	127000	2.3	9350	127000
	25	58.0	50.6 ※	7530	114000	39.2	46.5	10200	124000	28.8	34.1	10200	126000	2.0	10200	126000
	26	55.8	50.6 ※	7870	115000	37.7	41.3	9500	127000	27.7	30.3	9490	127000	2.0	9510	127000
	28	51.8	50.6 ※	8600	117000	35.0	41.3	10400	125000	25.8	30.3	10400	125000	1.8	10400	125000
	35	41.5	50.6 ※	10800	121000	28.0	50.6	16000	116000	20.6	41.8	18000	112000	1.5	18000	112000
	39	37.2	50.6	11800	122000	25.2	50.6	17500	113000	18.5	38.2	18000	112000	1.3	18000	112000
	42	34.6	50.6	12800	121000	23.4	48.2	18000	112000	17.2	35.4	18000	112000	1.2	18000	112000
	46	31.6	50.6	14000	119000	21.3	44.0	18000	112000	15.7	32.3	18000	112000	1.1	18000	112000
	48	30.3	50.6	14700	118000	20.5	41.7	18000	112000	15.0	30.7	18000	112000	1.1	18000	112000
	53	27.4	50.6	16100	116000	18.5	38.2	18000	112000	13.6	28.0	18000	112000	1.0	18000	112000
	54	26.9	50.6	16700	115000	18.2	36.8	18000	112000	13.4	27.1	18000	112000	1.0	18000	112000
	60	24.2	49.8	18000	112000	16.4	33.7	18000	112000	12.0	24.7	18000	112000	0.9	18000	112000
	67	21.7	41.0	16700	115000	14.7	29.8	18000	112000	10.8	21.9	18000	112000	0.8	18000	112000
	74	19.6	40.3	18000	112000	13.3	27.3	18000	112000	9.8	20.0	18000	112000	0.7	18000	112000
	80	18.2	35.2	17100	114000	12.3	25.0	18000	112000	9.0	18.4	18000	112000	0.7	18000	112000
	88	16.5	33.9	18000	112000	11.2	22.9	18000	112000	8.2	16.8	18000	112000	0.6	18000	112000
	93	15.6	30.7	17300	114000	10.6	21.6	18000	112000	7.8	15.9	18000	112000	0.6	18000	112000
	102	14.3	29.2	18000	112000	9.7	19.7	18000	112000	7.1	14.5	18000	112000	0.5	18000	112000
	112	13.0	24.3	16500	115000	8.8	17.9	18000	112000	6.5	13.1	18000	112000	0.5	18000	112000
	123	11.8	24.2	18000	112000	8.0	16.4	18000	112000	5.9	12.0	18000	112000	0.5	18000	112000
	138	10.6	20.9	17500	113000	7.1	14.6	18000	112000	5.3	10.7	18000	112000	0.4	18000	112000
	151	9.6	19.7	18000	112000	6.5	13.3	18000	112000	4.8	9.8	18000	112000	0.4	18000	112000
	163	8.9	18.2	18000	112000	6.1	12.3	18000	112000	4.5	9.0	18000	112000	0.4	18000	112000
	179	8.1	16.6	18000	112000	5.5	11.2	18000	112000	4.1	8.3	18000	112000	0.3	18000	112000
	189	7.7	15.3	17500	113000	5.2	10.6	18000	112000	3.9	7.8	18000	112000	0.3	18000	112000
	207	7.0	14.4	18000	112000	4.8	9.7	18000	112000	3.5	7.2	18000	112000	0.3	18000	112000
	227	6.4	13.0	18000	112000	4.4	8.8	18000	112000	3.2	6.5	18000	112000	0.3	18000	112000
	249	5.9	11.9	18000	112000	4.0	8.1	18000	112000	2.9	6.0	18000	112000	0.2	18000	112000
	278	5.3	10.6	18000	112000	3.6	7.2	18000	112000	2.6	5.3	18000	112000	0.2	18000	112000
	305	4.8	9.8	18000	112000	3.3	6.6	18000	112000	2.4	4.9	18000	112000	0.2	18000	112000
4F195 [Dimension Drawings from page 198]	11	131.9	75.0 ※	4780	91100	89.1	75.0	7080	98100	65.5	66.1	8490	106000	4.6	8670	128000
	13	111.6	75.0 ※	5830	94600	75.4	75.0	8630	101000	55.4	67.5	10600	108000	3.9	10600	125000
	14	103.6	75.0 ※	6380	96300	70.0	75.0	9430	102000	51.5	67.5	11600	109000	3.6	11600	123000
	16	90.7	75.0 ※	7290	98400	61.3	75.0	10800	104000	45.0	62.1	12200	113000	3.2	13200	121000
	18	80.6	75.0 ※	7970	100000	54.5	75.0	11800	105000	40.0	62.1	13300	114000	2.8	14500	118000
	19	76.4	55.0 ※	6410	107000	51.6	53.7	9260	115000	37.9	39.4	9250	127000	2.7	9260	127000
	21	69.1	55.0 ※	7010	109000	46.7	53.7	10100	117000	34.3	39.4	10100	126000	2.4	10100	126000
	22	66.0	55.0 ※	7480	110000	44.6	47.4	9540	121000	32.8	34.8	9530	127000	2.3	9550	127000
	25	58.0	55.0 ※	8180	112000	39.2	47.4	10400	123000	28.8	34.8	10400	125000	2.0	10400	125000
	26	55.8	55.0 ※	8550	113000	37.7	42.1	9680	127000	27.7	30.9	9670	127000	2.0	9690	127000
	28	51.8	55.0 ※	9350	115000	35.0	42.1	10600	125000	25.8	30.9	10600	125000	1.8	10600	125000
	35	41.5	55.0 ※	11800	118000	28.0	55.0	17400	113000	20.6	41.8	18000	112000	1.5	18000	112000
	39	37.2	55.0	12900	120000	25.2	52.0	18000	112000	18.5	38.2	18000	112000	1.3	18000	112000
	42	34.6	55.0	13900	119000	23.4	48.2	18000	112000	17.2	35.4	18000	112000	1.2	18000	112000
	46	31.6	55.0	15200	117000	21.3	44.0	18000	112000	15.7	32.3	18000	112000	1.1	18000	112000
	48	30.3	55.0	16000	116000	20.5	41.7	18000	112000	15.0	30.7	18000	112000	1.1	18000	112000
	53	27.4	55.0	17500	113000	18.5	38.2	18000	112000	13.6	28.0	18000	112000	1.0	18000	112000
	54	26.9	54.5	18000	112000	18.2	36.8	18000	112000	13.4	27.1	18000	112000	1.0	18000	112000
	60	24.2	49.8	18000	112000	16.4	33.7	18000	112000	12.0	24.7	18000	112000	0.9	18000	112000
	67	21.7	44.1	18000	112000	14.7	29.8	18000	112000	10.8	21.9	18000	112000	0.8	18000	112000

Selection Tables for Reducers (50Hz Input)

■**IMPORTANT**: Please refer to page 144 for Reducer Selection Table notes.

Size	n1	1450				980				720				50		
	Ratio i	n2 [rpm]	P1 [kW]	Tout [Nm]	Pro [N]	n2 [rpm]	P1 [kW]	Tout [Nm]	Pro [N]	n2 [rpm]	P1 [kW]	Tout [Nm]	Pro [N]	n2 [rpm]	Tout [Nm]	Pro [N]
4F195 [Dimension Drawings from page 198]	74	19.6	40.3	18000	112000	13.3	27.3	18000	112000	9.8	20.0	18000	112000	0.7	18000	112000
	80	18.2	37.1	18000	112000	12.3	25.0	18000	112000	9.0	18.4	18000	112000	0.7	18000	112000
	88	16.5	33.9	18000	112000	11.2	22.9	18000	112000	8.2	16.8	18000	112000	0.6	18000	112000
	93	15.6	31.9	18000	112000	10.6	21.6	18000	112000	7.8	15.9	18000	112000	0.6	18000	112000
	102	14.3	29.2	18000	112000	9.7	19.7	18000	112000	7.1	14.5	18000	112000	0.5	18000	112000
	112	13.0	26.5	18000	112000	8.8	17.9	18000	112000	6.5	13.1	18000	112000	0.5	18000	112000
	123	11.8	24.2	18000	112000	8.0	16.4	18000	112000	5.9	12.0	18000	112000	0.5	18000	112000
	138	10.6	21.5	18000	112000	7.1	14.6	18000	112000	5.3	10.7	18000	112000	0.4	18000	112000
	151	9.6	19.7	18000	112000	6.5	13.3	18000	112000	4.8	9.8	18000	112000	0.4	18000	112000
	163	8.9	18.2	18000	112000	6.1	12.3	18000	112000	4.5	9.0	18000	112000	0.4	18000	112000
	179	8.1	16.6	18000	112000	5.5	11.2	18000	112000	4.1	8.3	18000	112000	0.3	18000	112000
	189	7.7	15.7	18000	112000	5.2	10.6	18000	112000	3.9	7.8	18000	112000	0.3	18000	112000
	207	7.0	14.4	18000	112000	4.8	9.7	18000	112000	3.5	7.2	18000	112000	0.3	18000	112000
	227	6.4	13.0	18000	112000	4.4	8.8	18000	112000	3.2	6.5	18000	112000	0.3	18000	112000
	249	5.9	11.9	18000	112000	4.0	8.1	18000	112000	2.9	6.0	18000	112000	0.2	18000	112000
	278	5.3	10.6	18000	112000	3.6	7.2	18000	112000	2.6	5.3	18000	112000	0.2	18000	112000
	305	4.8	9.8	18000	112000	3.3	6.6	18000	112000	2.4	4.9	18000	112000	0.2	18000	112000

Selection Tables for Low Speed Reducers

(Ratio from 364 to 10658)

■ **IMPORTANT**: Please refer to page 144 for Reducer Selection Table notes.

Size	n1	1450				1750			
	Ratio i	n2 [rpm]	P1 [kW]	Tout [Nm]	Pro [N]	n2 [rpm]	P1 [kW]	Tout [Nm]	Pro [N]
4A10DA [Dimension Drawings from page 198]	364	4.0	0.4	853	21900	4.8	0.4	707	23700
	424	3.4	0.4	993	19600	4.1	0.4	823	22300
	501	2.9	0.4	1020	19000	3.5	0.4	973	20000
	578	2.5	0.3	1020	19000	3.	0.4	1020	19000
	683	2.1	0.3	1020	19000	2.6	0.3	1020	19000
	809	1.8	0.2	1020	19000	2.2	0.3	1020	19000
	956	1.5	0.2	1020	19000	1.8	0.2	1020	19000
	1117	1.3	0.2	1020	19000	1.6	0.2	1020	19000
	1320	1.1	0.1	1020	19000	1.3	0.2	1020	19000
	1656	0.9	0.1	1020	19000	1.1	0.1	1020	19000
	1957	0.7	0.1#	1020	19000	0.9	0.1	1020	19000
	2272	0.6	0.1#	1010	19300	0.8	0.1#	1010	19300
	2559	0.6	0.1#	1020	19000	0.7	0.1#	1020	19000
	2944	0.5	0.1#	1020	19000	0.6	0.1#	1020	19000
	3511	0.4	0.1#	1010	19300	0.5	0.1#	1010	19300
	4365	0.3	0.1#	1020	19000	0.4	0.1#	1020	19000
	5177	0.3	0.1#	1020	19000	0.3	0.1#	1020	19000
	6472	0.2	0.1#	1020	19000	0.3	0.1#	1020	19000
	7228	0.2	0.1#	1010	19300	0.2	0.1#	1010	19300
	8880	0.2	0.1#	1010	19300	0.2	0.1#	1010	19300
	10658	0.1	0.1#	1020	19000	0.2	0.1#	1020	19000
4A12DA [Dimension Drawings from page 198]	364	4.0	SELECT 4A10DA			4.8	SELECT 4A10DA		
	424	3.4				4.1			
	501	2.9				3.5			
	578	2.5				3.			
	683	2.1				2.6			
	809	1.8	0.3	1290	11500	2.2	0.3	1290	11500
	956	1.5	0.2	1290	11500	1.8	0.3	1290	11500
	1117	1.3	0.2	1290	11500	1.6	0.2	1290	11500
	1320	1.1	0.2	1290	11500	1.3	0.2	1290	11500
	1656	0.9	0.1	1290	11500	1.1	0.2	1290	11500
	1957	0.7	0.1	1290	11500	0.9	0.1	1290	11500
	2272	0.6	0.1#	1290	11500	0.8	0.1	1290	11500
	2559	0.6	0.1#	1290	11500	0.7	0.1	1290	11500
	2944	0.5	0.1#	1290	11500	0.6	0.1#	1290	11500
	3511	0.4	0.1#	1290	11500	0.5	0.1#	1290	11500
	4365	0.3	0.1#	1290	11500	0.4	0.1#	1290	11500
	5177	0.3	0.1#	1290	11500	0.3	0.1#	1290	11500
	6472	0.2	0.1#	1290	11500	0.3	0.1#	1290	11500
	7228	0.2	0.1#	1290	11500	0.2	0.1#	1290	11500
	8880	0.2	0.1#	1290	11500	0.2	0.1#	1290	11500
	10658	0.1	0.1#	1290	11500	0.2	0.1#	1290	11500
4A12DB [Dimension Drawings from page 198]	364	4.0	0.6	1290	11500	4.8	0.7	1290	11500
	424	3.4	0.5	1290	11500	4.1	0.6	1290	11500
	501	2.9	0.4	1290	11500	3.5	0.5	1290	11500
	578	2.5	0.4	1290	11500	3.0	0.5	1290	11500
	683	2.1	0.3	1290	11500	2.6	0.4	1290	11500
	809	1.8	0.3	1290	11500	2.2	0.3	1290	11500
	956	1.5	0.2	1290	11500	1.8	0.3	1290	11500
	1117	1.3	0.2	1290	11500	1.6	0.2	1290	11500
	1320	1.1	SELECT 4A12DA			1.3	SELECT 4A12DA		
	1656	0.9				1.1			
	1957	0.7				0.9			
	2272	0.6				0.8			
	2559	0.6				0.7			
	2944	0.5				0.6			
	3511	0.4				0.5			
	4365	0.3				0.4			
	5177	0.3				0.3			
	6472	0.2				0.3			
	7228	0.2				0.2			

The value with # is the required power for starting, not allowable input capacity. Please insure that the output torque of the reducer is less than or equal to the allowable torque as shown in Tout columns.

Selection Tables for Low Speed Reducers

(Ratio from 364 to 10658)

■ **IMPORTANT**: Please refer to page 144 for Reducer Selection Table notes.

Size	n1	1450				1750			
	Ratio i	n2 [rpm]	P1 [kW]	Tout [Nm]	Pro [N]	n2 [rpm]	P1 [kW]	Tout [Nm]	Pro [N]
4A12DB	8880	0.2	SELECT 4A12DA			0.2	SELECT 4A12DA		
	10658	0.1				0.2			
4B12DA [Dimension Drawings from page 198]	364	4.0	SELECT 4A12DB			4.8	SELECT 4A12DB		
	424	3.4				4.1			
	501	2.9				3.5			
	578	2.5				3.0			
	683	2.1				2.6			
	809	1.8	0.4	1900	34400	2.2	0.4	1570	37900
	956	1.5	0.4	2140	30900	1.8	0.4	1860	34900
	1117	1.3	0.3	2140	30900	1.6	0.4	2140	30900
	1320	1.1	0.3	2140	30900	1.3	0.3	2140	30900
	1656	0.9	0.2	2140	30900	1.1	0.3	2140	30900
	1957	0.7	0.2	2140	30900	0.9	0.2	2140	30900
	2272	0.6	0.1	2140	30900	0.8	0.2	2140	30900
	2559	0.6	0.1	2140	30900	0.7	0.2	2140	30900
	2944	0.5	0.1	2140	30900	0.6	0.2	2140	30900
	3511	0.4	0.1	2140	30900	0.5	0.1	2140	30900
	4365	0.3	0.1#	2140	30900	0.4	0.1	2140	30900
	5177	0.3	0.1#	2140	30900	0.3	0.1#	2140	30900
	6472	0.2	0.1#	2140	30900	0.3	0.1#	2140	30900
	7228	0.2	0.1#	2140	30900	0.2	0.1#	2140	30900
	8880	0.2	0.1#	2140	30900	0.2	0.1#	2140	30900
	10658	0.1	0.1#	2140	30900	0.2	0.1#	2140	30900
4B12DB [Dimension Drawings from page 198]	364	4.0	1.02	2140	30900	4.8	1.2	2140	30900
	424	3.4	0.9	2120	31300	4.1	1.1	2120	31300
	501	2.9	0.7	2140	30900	3.5	0.9	2140	30900
	578	2.5	0.6	2140	30900	3.0	0.8	2140	30900
	683	2.1	0.5	2140	30900	2.6	0.7	2140	30900
	809	1.8	0.5	2140	30900	2.2	0.6	2140	30900
	956	1.5	0.4	2140	30900	1.8	0.5	2140	30900
	1117	1.3	0.3	2140	30900	1.6	0.4	2140	30900
	1320	1.1	SELECT 4B12DA			1.3	SELECT 4B12DA		
	1656	0.9				1.1			
	1957	0.7				0.9			
	2272	0.6				0.8			
	2559	0.6				0.7			
	2944	0.5				0.6			
	3511	0.4				0.5			
	4365	0.3				0.4			
	5177	0.3				0.3			
	6472	0.2				0.3			
	7228	0.2				0.2			
	8880	0.2				0.2			
	10658	0.1				0.2			
4B14DA [Dimension Drawings from page 198]	364	4.0	SELECT 4B12DB			4.8	SELECT 4B12DB		
	424	3.4				4.1			
	501	2.9				3.5			
	578	2.5				3.0			
	683	2.1				2.6			
	809	1.8				2.2			
	956	1.5				1.8			
	1117	1.3				1.6			
	1320	1.1				1.3			
	1656	0.9				1.1			
	1957	0.7	0.2	2570	22300	0.9	0.3	2570	22300
	2272	0.6	0.2#	2570	22300	0.8	0.2	2570	22300
	2559	0.6	0.2#	2570	22300	0.7	0.2	2570	22300
	2944	0.5	0.2#	2570	22300	0.6	0.2#	2570	22300
	3511	0.4	0.2#	2570	22300	0.5	0.2#	2570	22300
	4365	0.3	0.2#	2570	22300	0.4	0.2#	2570	22300
	5177	0.3	0.2#	2570	22300	0.3	0.2#	2570	22300

The value with # is the required power for starting, not allowable input capacity. Please insure that the output torque of the reducer is less than or equal to the allowable torque as shown in Tout columns.

Selection Tables for Low Speed Reducers

(Ratio from 364 to 10658)

■ **IMPORTANT**: Please refer to page 144 for Reducer Selection Table notes.

Size	n1	1450				1750			
	Ratio i	n2 [rpm]	P1 [kW]	Tout [Nm]	Pro [N]	n2 [rpm]	P1 [kW]	Tout [Nm]	Pro [N]
4B14DA	6472	0.2	0.2#	2570	22300	0.3	0.2#	2570	22300
	7228	0.2	0.2#	2570	22300	0.2	0.2#	2570	22300
	8880	0.2	0.2#	2570	22300	0.2	0.2#	2570	22300
	10658	0.1	0.2#	2570	22300	0.2	0.2#	2570	22300
4B14DB [Dimension Drawings from page 198]	364	4.0	SELECT 4B14DA			4.8	SELECT 4B14DA		
	424	3.4				4.1			
	501	2.9	0.9	2570	22300	3.5	1.1	2570	22300
	578	2.5	0.8	2570	22300	3.	0.9	2570	22300
	683	2.1	0.7	2570	22300	2.6	0.8	2570	22300
	809	1.8	0.6	2570	22300	2.2	0.7	2570	22300
	956	1.5	0.5	2570	22300	1.8	0.6	2570	22300
	1117	1.3	0.4	2570	22300	1.6	0.5	2570	22300
	1320	1.1	0.3	2570	22300	1.3	0.4	2570	22300
	1656	0.9	0.3	2570	22300	1.1	0.3	2570	22300
	1957	0.7	0.2	2570	22300	0.9	0.3	2570	22300
	2272	0.6	0.2#	2570	22300	0.8	0.2	2570	22300
	2559	0.6	-	-	-	0.7	-	-	-
	2944	0.5	0.2#	2570	22300	0.6	0.2#	2570	22300
	3511	0.4	SELECT 4B14DA			0.5	SELECT 4B14DA		
	4365	0.3				0.4			
	5177	0.3				0.3			
	6472	0.2				0.3			
	7228	0.2				0.2			
	8880	0.2				0.2			
	10658	0.1				0.2			
4C14DA [Dimension Drawings from page 198]	364	4.0	SELECT 4B14DB			4.8	SELECT 4B14DB		
	424	3.4				4.1			
	501	2.9				3.5			
	578	2.5				3.0			
	683	2.1				2.6			
	809	1.8				2.2			
	956	1.5				1.8			
	1117	1.3				1.6			
	1320	1.1				1.3			
	1656	0.9				1.1			
	1957	0.7	0.4	4590	46400	0.9	0.4	3800	55600
	2272	0.6	0.4	4660	45300	0.8	0.4	4410	48700
	2559	0.6	0.3	4660	45300	0.7	0.4	4660	45300
	2944	0.5	0.3	4660	45300	0.6	0.3	4020	53300
	3511	0.4	0.2	4660	45300	0.5	0.3	4660	45300
	4365	0.3	0.2#	4660	45300	0.4	0.2	4660	45300
	5177	0.3	0.2#	4250	50800	0.3	0.2#	4250	50800
	6472	0.2	0.2#	4660	45300	0.3	0.2#	4660	45300
	7228	0.2	0.2#	4660	45300	0.2	0.2#	4660	45300
	8880	0.2	0.2#	4660	45300	0.2	0.2#	4660	45300
	10658	0.1	0.2#	4250	50800	0.2	0.2#	4250	50800
4C14DB [Dimension Drawings from page 198]	364	4.0	SELECT 4C14DA			4.8	SELECT 4C14DA		
	424	3.4				4.1			
	501	2.9	1.5	4370	49300	3.5	1.5	3620	57300
	578	2.5	1.4	4620	45900	3.0	1.5	4180	51600
	683	2.1	1.2	4620	45900	2.6	1.4	4620	45900
	809	1.8	1.0	4550	46900	2.2	1.2	4550	46900
	956	1.5	0.8	4550	46900	1.8	1.0	4550	46900
	1117	1.3	0.7	4660	45300	1.6	0.9	4660	45300
	1320	1.1	0.6	4660	45300	1.3	0.7	4660	45300
	1656	0.9	0.5	4660	45300	1.1	0.6	4660	45300
	1957	0.7	0.4	4660	45300	0.9	0.5	4660	45300
	2272	0.6	0.4	4660	45300	0.8	0.4	4660	45300
	2559	0.6	-	-	-	0.7	-	-	-
	2944	0.5	0.3	4660	45300	0.6	0.3	4660	45300
	3511	0.4	-	-	-	0.5	-	-	-

The value with # is the required power for starting, not allowable input capacity. Please insure that the output torque of the reducer is less than or equal to the allowable torque as shown in Tout columns.

Selection Tables for Low Speed Reducers

(Ratio from 364 to 10658)

■ **IMPORTANT**: Please refer to page 144 for Reducer Selection Table notes.

Size	n1	1450				1750			
	Ratio i	n2 [rpm]	P1 [kW]	Tout [Nm]	Pro [N]	n2 [rpm]	P1 [kW]	Tout [Nm]	Pro [N]
4C14DB [Dimension Drawings from page 198]	4365	0.3	SELECT 4C14DA			0.4	SELECT 4C14DA		
	5177	0.3				0.3			
	6472	0.2				0.3			
	7228	0.2				0.2			
	8880	0.2				0.2			
	10658	0.1				0.2			
4C14DC [Dimension Drawings from page 198]	364	4.0	2.2	4660	45300	4.8	2.7	4660	45300
	424	3.4	1.8	4400	49000	4.1	2.1	4400	49000
	501	2.9	1.6	4660	45300	3.5	2.0	4660	45300
	578	2.5	1.4	4620	45900	3.0	1.7	4620	45900
	683	2.1	SELECT 4C14DB			2.6	SELECT 4C14DB		
	809	1.8				2.2			
	956	1.5				1.8			
	1117	1.3				1.6			
	1320	1.1				1.3			
	1656	0.9				1.1			
	1957	0.7				0.9			
	2272	0.6				0.8			
	2559	0.6				0.7			
	2944	0.5				0.6			
	3511	0.4				0.5			
	4365	0.3				0.4			
	5177	0.3				0.3			
	6472	0.2				0.3			
	7228	0.2				0.2			
	8880	0.2				0.2			
	10658	0.1				0.2			
4C16DA [Dimension Drawings from page 198]	364	4.0	SELECT 4C14DC			4.8	SELECT 4C14DC		
	424	3.4				4.1			
	501	2.9				3.5			
	578	2.5				3.0			
	683	2.1	1.3	5140	37200	2.6	1.5	4940	40900
	809	1.8	1.1	5140	37200	2.2	1.3	5140	37200
	956	1.5	0.9	5140	37200	1.8	1.1	5140	37200
	1117	1.3	0.8	5140	37200	1.6	1.0	5140	37200
	1320	1.1	0.7	5140	37200	1.3	0.8	5140	37200
	1656	0.9	0.5	5140	37200	1.1	0.7	5140	37200
	1957	0.7	0.5	5140	37200	0.9	0.6	5140	37200
	2272	0.6	0.4#	5140	37200	0.8	0.4	5140	37200
	2559	0.6	0.4#	5140	37200	0.7	0.4	5140	37200
	2944	0.5	0.4#	5140	37200	0.6	0.4#	5140	37200
	3511	0.4	0.4#	5140	37200	0.5	0.4#	5140	37200
	4365	0.3	0.4#	5140	37200	0.4	0.4#	5140	37200
	5177	0.3	0.4#	5140	37200	0.3	0.4#	5140	37200
	6472	0.2	0.2#	5140	37200	0.3	0.4#	5140	37200
	7228	0.2	0.2#	5140	37200	0.2	0.4#	5140	37200
	8880	0.2	0.2#	5140	37200	0.2	0.2#	5140	37200
	10658	0.1	0.2#	5140	37200	0.2	0.2#	5140	37200
4D16DA [Dimension Drawings from page 198]	364	4.0	SELECT 4C16DA			4.8	SELECT 4C16DA		
	424	3.4				4.1			
	501	2.9				3.5			
	578	2.5				3.0			
	683	2.1	1.5	5960	77400	2.6	1.5	4940	84500
	809	1.8	1.5	7060	67100	2.2	1.5	5850	78300
	956	1.5	1.3	7150	66100	1.8	1.5	6910	68700
	1117	1.3	1.1	7150	66100	1.6	1.3	7150	66100
	1320	1.1	0.9	7150	66100	1.3	1.1	7150	66100
	1656	0.9	0.7	7150	66100	1.1	0.9	7150	66100
	1957	0.7	0.6	7150	66100	0.9	0.8	7150	66100
	2272	0.6	0.5	7150	66100	0.8	0.7	7150	66100
	2559	0.6	0.5	7150	66100	0.7	0.6	7150	66100

The value with # is the required power for starting, not allowable input capacity. Please insure that the output torque of the reducer is less than or equal to the allowable torque as shown in Tout columns.

Selection Tables for Low Speed Reducers

(Ratio from 364 to 10658)

■ **IMPORTANT**: Please refer to page 144 for Reducer Selection Table notes.

Size	n1	1450				1750			
	Ratio i	n2 [rpm]	P1 [kW]	Tout [Nm]	Pro [N]	n2 [rpm]	P1 [kW]	Tout [Nm]	Pro [N]
4D16DA [Dimension Drawings from page 198]	2944	0.5	0.4	7150	66100	0.6	0.5	7150	66100
	3511	0.4	0.4#	7150	66100	0.5	0.4	7150	66100
	4365	0.3	0.4#	7150	66100	0.4	0.4#	7150	66100
	5177	0.3	0.4#	6980	67900	0.3	0.4#	6980	67900
	6472	0.2	0.2#	7150	66100	0.3	0.4#	7150	66100
	7228	0.2	0.2#	7150	66100	0.2	0.4#	7150	66100
	8880	0.2	0.2#	7150	66100	0.2	0.2#	7150	66100
	10658	0.1	0.2#	6980	67900	0.2	0.2#	6980	67900
4D16DB [Dimension Drawings from page 198]	364	4.0	3.2	6670	71100	4.8	3.2	5530	80600
	424	3.4	2.9	7150	66100	4.1	3.2	6430	73400
	501	2.9	2.5	7150	66100	3.5	3.0	7150	66100
	578	2.5	2.2	7150	66100	3.0	2.6	7150	66100
	683	2.1	1.8	7150	66100	2.6	2.2	7150	66100
	809	1.8	1.5	7150	66100	2.2	1.9	7150	66100
	956	1.5	1.3	7150	66100	1.8	1.6	7150	66100
	1117	1.3	SELECT 4D16DA			1.6	SELECT 4D16DA		
	1320	1.1				1.3			
	1656	0.9				1.1			
	1957	0.7				0.9			
	2272	0.6				0.8			
	2559	0.6				0.7			
	2944	0.5				0.6			
	3511	0.4				0.5			
	4365	0.3				0.4			
	5177	0.3				0.3			
	6472	0.2				0.3			
	7228	0.2				0.2			
	8880	0.1				0.2			
	10658	0.1				0.2			
4D17DA [Dimension Drawings from page 198]	364	4.0	SELECT 4D16DB			4.8	SELECT 4D16DB		
	424	3.4				4.1			
	501	2.9				3.5			
	578	2.5				3.0			
	683	2.1				2.6			
	809	1.8				2.2			
	956	1.5	1.5	8340	49500	1.8	1.5	6910	68700
	1117	1.3	1.4	8720	42200	1.6	1.5	8100	53900
	1320	1.1	1.2	8720	42200	1.3	1.4	8720	42200
	1656	0.9	0.9	8720	42200	1.1	1.1	8720	42200
	1957	0.7	0.8	8720	42200	0.9	0.9	8720	42200
	2272	0.6	0.7	8720	42200	0.8	0.8	8720	42200
	2559	0.6	0.6	8720	42200	0.7	0.7	8720	42200
	2944	0.5	0.5	8720	42200	0.6	0.6	8720	42200
	3511	0.4	0.4	8720	42200	0.5	0.5	8720	42200
	4365	0.3	0.4#	8720	42200	0.4	0.4	8720	42200
	5177	0.3	0.4#	8720	42200	0.3	0.4#	8720	42200
	6472	0.2	0.4#	8720	42200	0.3	0.4#	8720	42200
	7228	0.2	0.4#	8720	42200	0.2	0.4#	8720	42200
	8880	0.2	0.4#	8720	42200	0.2	0.4#	8720	42200
	10658	0.1	0.2#	8720	42200	0.2	0.4#	8720	42200
4D17DB [Dimension Drawings from page 198]	364	4.0	-	-	-	4.8	-	-	-
	424	3.4	-	-	-	4.1	-	-	-
	501	2.9	3.0	8720	42200	3.5	3.2	7600	60700
	578	2.5	2.6	8720	42200	3.0	3.2	8720	42200
	683	2.1	2.2	8720	42200	2.6	2.7	8720	42200
	809	1.8	1.9	8720	42200	2.2	2.3	8720	42200
	956	1.5	1.6	8720	42200	1.8	1.9	8720	42200
	1117	1.3	1.4	8720	42200	1.6	1.6	8720	42200
	1320	1.1	1.2	8720	42200	1.3	1.4	8720	42200
	1656	0.9	-	-	-	1.1	-	-	-
	1957	0.7	-	-	-	0.9	-	-	-

The value with # is the required power for starting, not allowable input capacity. Please insure that the output torque of the reducer is less than or equal to the allowable torque as shown in Tout columns.

Selection Tables for Low Speed Reducers

(Ratio from 364 to 10658)

■ **IMPORTANT**: Please refer to page 144 for Reducer Selection Table notes.

Size	n1	1450				1750			
	Ratio i	n2 [rpm]	P1 [kW]	Tout [Nm]	Pro [N]	n2 [rpm]	P1 [kW]	Tout [Nm]	Pro [N]
4D17DB [Dimension Drawings from page 198]	2272	0.6	SELECT 4D17DA			0.8	SELECT 4D17DA		
	2559	0.6				0.7			
	2944	0.5				0.6			
	3511	0.4				0.5			
	4365	0.3				0.4			
	5177	0.3				0.3			
	6472	0.2				0.3			
	7228	0.2				0.2			
	8880	0.2				0.2			
	10658	0.1				0.2			
4D17DC [Dimension Drawings from page 198]	364	4.0	4.2	8720	42200	4.8	5.0	8720	42200
	424	3.4	3.6	8720	42200	4.1	4.3	8720	42200
	501	2.9	3.0	8720	42200	3.5	3.7	8720	42200
	578	2.5	2.6	8720	42200	3.0	3.2	8720	42200
	683	2.1	2.2	8720	42200	2.6	2.7	8720	42200
	809	1.8	1.9	8720	42200	2.2	2.3	8720	42200
	956	1.5	1.6	8720	42200	1.8	1.91	8720	42200
	1117	1.3	SELECT 4D17DB			1.6	SELECT 4D17DB		
	1320	1.1				1.3			
	1656	0.9				1.1			
	1957	0.7				0.9			
	2272	0.6				0.8			
	2559	0.6				0.7			
	2944	0.5				0.6			
	3511	0.4				0.5			
	4365	0.3				0.4			
	5177	0.3				0.3			
	6472	0.2				0.3			
	7228	0.2				0.2			
	8880	0.2				0.2			
	10658	0.1				0.2			
4D18DA [Dimension Drawings from page 198]	364	4.0	SELECT 4D17DC			4.8	SELECT 4D17DC		
	424	3.4				4.1			
	501	2.9				3.5			
	578	2.5				3.0			
	683	2.1				2.6			
	809	1.8	1.9	8720	42200	2.2	2.3	8720	42200
	956	1.5	1.6	8720	42200	1.8	1.9	8720	42200
	1117	1.3	1.4	8720	42200	1.6	1.6	8720	42200
	1320	1.1	1.2	8720	42200	1.3	1.4	8720	42200
	1656	0.9	0.9	8720	42200	1.1	1.1	8720	42200
	1957	0.7	0.8	8720	42200	0.9	0.9	8720	42200
	2272	0.6	0.8#	8720	42200	0.8	0.8	8720	42200
	2559	0.6	0.8#	8720	42200	0.7	0.8#	8720	42200
	2944	0.5	0.8#	8720	42200	0.6	0.8#	8720	42200
	3511	0.4	0.8#	8720	42200	0.5	0.8#	8720	42200
	4365	0.3	0.8#	8720	42200	0.4	0.8#	8720	42200
	5177	0.3	0.8#	8720	42200	0.3	0.8#	8720	42200
	6472	0.2	0.8#	8720	42200	0.3	0.8#	8720	42200
	7228	0.2	0.4#	8720	42200	0.2	0.8#	8720	42200
	8880	0.2	0.4#	8720	42200	0.2	0.4#	8720	42200
	10658	0.1	0.4#	8720	42200	0.2	0.4#	8720	42200
4D18DB [Dimension Drawings from page 198]	364	4.0	4.2	8720	42200	4.8	5.0	8720	42200
	424	3.4	3.6	8720	42200	4.1	4.3	8720	42200
	501	2.9	3.0	8720	42200	3.5	3.7	8720	42200
	578	2.5	2.6	8720	42200	3.0	3.2	8720	42200
	683	2.1	2.2	8720	42200	2.6	2.7	8720	42200
	809	1.8	1.9	8720	42200	2.2	2.3	8720	42200
	956	1.5	1.6	8720	42200	1.8	1.9	8720	42200
	1117	1.3	1.4	8720	42200	1.6	1.6	8720	42200
	1320	1.1	1.2	8720	42200	1.3	1.4	8720	42200

The value with # is the required power for starting, not allowable input capacity. Please insure that the output torque of the reducer is less than or equal to the allowable torque as shown in Tout columns.

Selection Tables for Low Speed Reducers

(Ratio from 364 to 10658)

■ **IMPORTANT**: Please refer to page 144 for Reducer Selection Table notes.

Size	n1	1450				1750			
	Ratio i	n2 [rpm]	P1 [kW]	Tout [Nm]	Pro [N]	n2 [rpm]	P1 [kW]	Tout [Nm]	Pro [N]
4D18DB [Dimension Drawings from page 198]	1656	0.9	SELECT 4D18DA			1.0	SELECT 4D18DA		
	1957	0.7				0.9			
	2272	0.6				0.8			
	2559	0.6				0.7			
	2944	0.5				0.6			
	3511	0.4				0.5			
	4365	0.3				0.4			
	5177	0.3				0.3			
	6472	0.2				0.3			
	7228	0.2				0.2			
	8880	0.2				0.2			
	10658	0.1				0.2			
4E17DA [Dimension Drawings from page 198]	364	4.0	SELECT 4D18DB			4.8	SELECT 4D18DB		
	424	3.4				4.1			
	501	2.9				3.5			
	578	2.5				3.0			
	683	2.1				2.6			
	809	1.8				2.2			
	956	1.5	1.5	8340	89200	1.8	1.5	6910	92100
	1117	1.3	1.5	9780	86400	1.6	1.5	8100	89700
	1320	1.1	1.4	10700	84500	1.3	1.5	9580	86800
	1656	0.9	1.1	10700	84500	1.1	1.4	10700	84500
	1957	0.7	0.9	10700	84500	0.9	1.2	10700	84500
	2272	0.6	0.8	10700	84500	0.8	1.0	10700	84500
	2559	0.6	0.7	10700	84500	0.7	0.9	10700	84500
	2944	0.5	0.6	10700	84500	0.6	0.8	10700	84500
	3511	0.4	0.5	10700	84500	0.5	0.6	10700	84500
	4365	0.3	0.4	10700	84500	0.4	0.5	10700	84500
	5177	0.3	0.4#	10700	84500	0.3	0.4	10700	84500
	6472	0.2	0.4#	10700	84500	0.3	0.4#	10700	84500
	7228	0.2	0.4#	10700	84500	0.2	0.4#	10700	84500
	8880	0.2	0.4#	10700	84500	0.2	0.4#	10700	84500
	10658	0.1	0.2#	10700	84500	0.2	0.4#	10700	84500
4E17DB [Dimension Drawings from page 198]	364	4.0	-	-	-	4.8	-	-	-
	424	3.4	-	-	-	4.1	-	-	-
	501	2.9	3.2	9170	87600	3.5	3.2	7600	90700
	578	2.5	3.2	10600	84800	3.0	3.2	8770	88400
	683	2.1	2.7	10700	84500	2.6	3.2	10400	85200
	809	1.8	2.3	10700	84500	2.2	2.8	10700	84500
	956	1.5	1.9	10700	84500	1.8	2.4	10700	84500
	1117	1.3	1.7	10700	84500	1.6	2.0	10700	84500
	1320	1.1	1.4	10700	84500	1.3	1.7	10700	84500
	1656	0.9	SELECT 4E17DA			1.1	SELECT 4E17DA		
	1957	0.7				0.9			
	2272	0.6				0.8			
	2559	0.6				0.7			
	2944	0.5				0.6			
	3511	0.4				0.5			
	4365	0.3				0.4			
	5177	0.3				0.3			
	6472	0.2				0.3			
	7228	0.2				0.2			
	8880	0.2				0.2			
	10658	0.1				0.2			
4E17DC [Dimension Drawings from page 198]	364	4.0	5.1	10700	84500	4.8	6.2	10700	84500
	424	3.4	4.4	10700	84500	4.1	5.3	10700	84500
	501	2.9	3.7	10700	84500	3.5	4.5	10700	84500
	578	2.5	3.2	10700	84500	3.0	3.9	10700	84500
	683	2.1	2.7	10700	84500	2.6	3.3	10700	84500
	809	1.8	2.3	10700	84500	2.2	2.8	10700	84500
	956	1.5	1.9	10700	84500	1.8	2.4	10700	84500

The value with # is the required power for starting, not allowable input capacity. Please insure that the output torque of the reducer is less than or equal to the allowable torque as shown in Tout columns.

Selection Tables for Low Speed Reducers

(Ratio from 364 to 10658)

■ **IMPORTANT**: Please refer to page 144 for Reducer Selection Table notes.

Size	n1	1450				1750			
	Ratio i	n2 [rpm]	P1 [kW]	Tout [Nm]	Pro [N]	n2 [rpm]	P1 [kW]	Tout [Nm]	Pro [N]
4E17DC [Dimension Drawings from page 198]	1117	1.3	SELECT 4E17DB			1.6	SELECT 4E17DB		
	1320	1.1				1.3			
	1656	0.9				1.0			
	1957	0.7				0.9			
	2272	0.6				0.8			
	2559	0.6				0.7			
	2944	0.5				0.6			
	3511	0.4				0.5			
	4365	0.3				0.4			
	5177	0.3				0.3			
	6472	0.2				0.3			
	7228	0.2				0.2			
	8880	0.2				0.2			
	10658	0.1				0.2			
4E18DA [Dimension Drawings from page 198]	364	4.0	SELECT 4E17DC			4.8	SELECT 4E17DC		
	424	3.4				4.1			
	501	2.9				3.5			
	578	2.5				3.0			
	683	2.1				2.6			
	809	1.8	2.5	11600	75600	2.2	3.0	11600	75600
	956	1.5	2.1	11600	75600	1.8	2.5	11600	75600
	1117	1.3	1.8	11600	75600	1.6	2.2	11600	75600
	1320	1.1	1.5	11600	75600	1.3	1.8	11600	75600
	1656	0.9	1.2	11600	75600	1.1	1.5	11600	75600
	1957	0.7	1.0	11600	75600	0.9	1.2	11600	75600
	2272	0.6	0.9	11600	75600	0.8	1.1	11600	75600
	2559	0.6	0.8	11600	75600	0.7	1.0	11600	75600
	2944	0.5	0.8#	11600	75600	0.6	0.8	11600	75600
	3511	0.4	0.8#	11600	75600	0.5	0.8#	11600	75600
	4365	0.3	0.8#	11600	75600	0.4	0.8#	11600	75600
	5177	0.3	0.8#	11600	75600	0.3	0.8#	11600	75600
	6472	0.2	0.8#	11600	75600	0.3	0.8#	11600	75600
	7228	0.2	0.4#	11600	75600	0.2	0.8#	11600	75600
	8880	0.2	0.4#	11600	75600	0.2	0.4#	11600	75600
	10658	0.1	0.4#	11600	75600	0.2	0.4#	11600	75600
4E18DB [Dimension Drawings from page 198]	364	4.0	5.5	11600	75600	4.8	6.7	11600	75600
	424	3.4	4.8	11600	75600	4.1	5.7	11600	75600
	501	2.9	4.0	11600	75600	3.5	4.9	11600	75600
	578	2.5	3.5	11600	75600	3.0	4.2	11600	75600
	683	2.1	3.0	11600	75600	2.6	3.6	11600	75600
	809	1.8	2.5	11600	75600	2.2	3.0	11600	75600
	956	1.5	2.1	11600	75600	1.8	2.5	11600	75600
	1117	1.3	1.8	11600	75600	1.6	2.2	11600	75600
	1320	1.1	1.5	11600	75600	1.3	1.84	11600	75600
	1656	0.9	SELECT 4E18DA			1.1	SELECT 4E18DA		
	1957	0.7				0.9			
	2272	0.6				0.8			
	2559	0.6				0.7			
	2944	0.5				0.6			
	3511	0.4				0.5			
	4365	0.3				0.4			
	5177	0.3				0.3			
	6472	0.2				0.3			
	7228	0.2				0.2			
	8880	0.2				0.2			
	10658	0.1				0.2			
4E19DA [Dimension Drawings from page 198]	364	4.0	SELECT 4E18DB			4.8	SELECT 4E18DB		
	424	3.4				4.1			
	501	2.9				3.5			
	578	2.5				3.0			
	683	2.1	3.0	11600	75600	2.6	3.6	11600	75600

The value with # is the required power for starting, not allowable input capacity. Please insure that the output torque of the reducer is less than or equal to the allowable torque as shown in Tout columns.

Selection Tables for Low Speed Reducers

(Ratio from 364 to 10658)

■ **IMPORTANT**: Please refer to page 144 for Reducer Selection Table notes.

Size	n1	1450				1750			
	Ratio i	n2 [rpm]	P1 [kW]	Tout [Nm]	Pro [N]	n2 [rpm]	P1 [kW]	Tout [Nm]	Pro [N]
4E19DA [Dimension Drawings from page 198]	809	1.8	2.5	11600	75600	2.2	3.0	11600	75600
	956	1.5	2.1	11600	75600	1.8	2.5	11600	75600
	1117	1.3	1.8	11600	75600	1.6	2.2	11600	75600
	1320	1.1	1.5	11600	75600	1.3	1.8	11600	75600
	1656	0.9	1.2	11600	75600	1.1	1.5	11600	75600
	1957	0.7	1.0	11600	75600	0.9	1.2	11600	75600
	2272	0.6	0.9	11600	75600	0.8	1.1	11600	75600
	2559	0.6	0.8	11600	75600	0.7	1.0	11600	75600
	2944	0.5	0.8#	11600	75600	0.6	0.8	11600	75600
	3511	0.4	0.8#	11600	75600	0.5	0.8#	11600	75600
	4365	0.3	0.8#	11600	75600	0.4	0.8#	11600	75600
	5177	0.3	0.8#	11600	75600	0.3	0.8#	11600	75600
	6472	0.2	0.8#	11600	75600	0.3	0.8#	11600	75600
	7228	0.2	0.8#	11600	75600	0.2	0.8#	11600	75600
	8880	0.2	0.8#	11600	75600	0.2	0.8#	11600	75600
	10658	0.1	0.8#	11600	75600	0.2	0.8#	11600	75600
4E19DB [Dimension Drawings from page 198]	364	4.0	5.5	11600	75600	4.8	6.7	11600	75600
	424	3.4	4.8	11600	75600	4.1	5.7	11600	75600
	501	2.9	4.0	11600	75600	3.5	4.9	11600	75600
	578	2.5	3.5	11600	75600	3.0	4.2	11600	75600
	683	2.1	3.0	11600	75600	2.6	3.6	11600	75600
	809	1.8	2.5	11600	75600	2.2	3.0	11600	75600
	956	1.5	2.1	11600	75600	1.8	2.5	11600	75600
	1117	1.3	SELECT 4E19DA			1.6	2.2	11600	75600
	1320	1.1				1.3	SELECT 4E19DA		
	1656	0.9				1.1			
	1957	0.7				0.9			
	2272	0.6				0.8			
	2559	0.6				0.7			
	2944	0.5				0.6			
	3511	0.4				0.5			
	4365	0.3				0.4			
	5177	0.3				0.3			
	6472	0.2				0.3			
	7228	0.2				0.2			
	8880	0.2				0.2			
	10658	0.1				0.2			
4F18DA [Dimension Drawings from page 198]	364	4.0	SELECT 4E19DB			4.8	SELECT 4E19DB		
	424	3.4				4.1			
	501	2.9				3.5			
	578	2.5				3.0			
	683	2.1				2.6			
	809	1.8	3.2	14800	143000	2.2	3.2	12300	143000
	956	1.5	3.1	17000	136000	1.8	3.2	14500	143000
	1117	1.3	2.6	17000	136000	1.6	3.2	17000	136000
	1320	1.1	2.2	17000	136000	1.3	2.7	17000	136000
	1656	0.9	1.8	17000	136000	1.1	2.2	17000	136000
	1957	0.7	1.5	17000	136000	0.9	1.8	17000	136000
	2272	0.6	1.3	17000	136000	0.8	1.6	17000	136000
	2559	0.6	1.2	17000	136000	0.7	1.4	17000	136000
	2944	0.5	1.0	17000	136000	0.6	1.2	17000	136000
	3511	0.4	0.8	17000	136000	0.5	1.0	17000	136000
	4365	0.3	0.8#	17000	136000	0.4	0.8	17000	136000
	5177	0.3	0.8#	17000	136000	0.3	0.8#	17000	136000
	6472	0.2	0.8#	17000	136000	0.3	0.8#	17000	136000
	7228	0.2	0.4	17000	136000	0.2	0.8#	17000	136000
	8880	0.2	0.4#	17000	136000	0.2	0.4	17000	136000
	10658	0.1	0.4#	17000	136000	0.2	0.4#	17000	136000
4F18DB	364	4.0	8.0	16700	139000	4.8	9.6	16700	139000
	424	3.4	6.7	16400	141000	4.1	8.1	16400	141000
	501	2.9	5.8	16700	139000	3.5	7.0	16700	139000

The value with # is the required power for starting, not allowable input capacity. Please insure that the output torque of the reducer is less than or equal to the allowable torque as shown in Tout columns.

Selection Tables for Low Speed Reducers

(Ratio from 364 to 10658)

■ **IMPORTANT**: Please refer to page 144 for Reducer Selection Table notes.

Size	n1	1450				1750			
	Ratio i	n2 [rpm]	P1 [kW]	Tout [Nm]	Pro [N]	n2 [rpm]	P1 [kW]	Tout [Nm]	Pro [N]
4F18DB [Dimension Drawings from page 198]	578	2.5	5.0	16700	138000	3.0	6.1	16700	138000
	683	2.1	4.3	16700	138000	2.6	5.1	16700	138000
	809	1.8	3.7	17000	136000	2.2	4.4	17000	136000
	956	1.5	3.1	17000	136000	1.8	3.7	17000	136000
	1117	1.3	2.6	17000	136000	1.6	3.2	17000	136000
	1320	1.1	2.2	17000	136000	1.3	2.7	17000	136000
	1656	0.9	SELECT 4F18DA			1.1	SELECT 4F18DA		
	1957	0.7				0.9			
	2272	0.6				0.8			
	2559	0.6				0.7			
	2944	0.5				0.6			
	3511	0.4				0.5			
	4365	0.3				0.4			
	5177	0.3				0.3			
	6472	0.2				0.3			
	7228	0.2				0.2			
	8880	0.2				0.2			
	10658	0.1				0.2			
4F19DA [Dimension Drawings from page 198]	364	4.0	SELECT 4F18DB			4.8	SELECT 4F18DB		
	424	3.4				4.1			
	501	2.9				3.5			
	578	2.5				3.0			
	683	2.1	4.4	17400	132000	2.6	5.3	17400	132000
	809	1.8	3.7	17400	132000	2.2	4.5	17400	132000
	956	1.5	3.2	17400	132000	1.8	3.8	17400	132000
	1117	1.3	2.7	17400	132000	1.6	3.3	17400	132000
	1320	1.1	2.3	17400	132000	1.3	2.8	17400	132000
	1656	0.9	1.8	17400	132000	1.1	2.2	17400	132000
	1957	0.7	1.5	17400	132000	0.9	1.9	17400	132000
	2272	0.6	1.3	17400	132000	0.8	1.6	17400	132000
	2559	0.6	1.2	17400	132000	0.7	1.4	17400	132000
	2944	0.5	1.0	17400	132000	0.6	1.2	17400	132000
	3511	0.4	0.9	17400	132000	0.5	1.0	17400	132000
	4365	0.3	0.8#	17400	132000	0.4	0.8	17400	132000
	5177	0.3	0.8#	17400	132000	0.3	0.8#	17400	132000
	6472	0.2	0.8#	17400	132000	0.3	0.8#	17400	132000
	7228	0.2	0.8#	17400	132000	0.2	0.8#	17400	132000
	8880	0.2	0.8#	17400	132000	0.2	0.8#	17400	132000
	10658	0.1	0.8#	17400	132000	0.2	0.8#	17400	132000
4F19DB [Dimension Drawings from page 198]	364	4.0	8.3	17400	132000	4.8	10.0	17400	132000
	424	3.4	7.1	17400	132000	4.1	8.6	17400	132000
	501	2.9	6.0	17400	132000	3.5	7.3	17400	132000
	578	2.5	5.2	17400	132000	3.0	6.3	17400	132000
	683	2.1	4.4	17400	132000	2.6	5.3	17400	132000
	809	1.8	3.7	17400	132000	2.2	4.5	17400	132000
	956	1.5	3.2	17400	132000	1.8	3.8	17400	132000
	1117	1.3	SELECT 4F19DA			1.6	3.3	17400	132000
	1320	1.1				1.3	SELECT 4F19DA		
	1656	0.9				1.1			
	1957	0.7				0.9			
	2272	0.6				0.8			
	2559	0.6				0.7			
	2944	0.5				0.6			
	3511	0.4				0.5			
	4365	0.3				0.4			
	5177	0.3				0.3			
	6472	0.2				0.3			
	7228	0.2				0.2			
	8880	0.2				0.2			
	10658	0.1				0.2			

The value with # is the required power for starting, not allowable input capacity. Please insure that the output torque of the reducer is less than or equal to the allowable torque as shown in Tout columns.

Dimensional Drawings for Reducers

Important Notes :

1. All the dimension values (except for shaft diameter and main mounting sections) on the dimensional drawings in this catalog are the maximum values determined considering the concavo-convex portions on each section. Thus, they may somewhat differ from those of the actual products.
2. Consult us for the dimensions of any portions not specified on the dimensional drawings.
3. The dimensional drawings on this catalog are subject to change without prior notice.
4. Perform the final confirmation on the dimension of product with our manufacturing specification.

Dimensional Drawings:

	Page
Shaft Mount / Case Mount Type :	199
Flange Mount Type :	203
Foot Mount Type :	207

Supplementary Drawings:

	Page
X-Adaptor for Single Stage :	211
X-Adaptor for Double Stage :	212
J-Adaptor for Single Stage :	216
J-Adaptor for Double Stage :	218

Dimensional Drawings

■ Shaft Mount for Hollow Shafts and Case Mount for Solid Shafts / Bevel + Cyclo Single Stage Type

L◊Y - Reducer's frame size - Reduction ratio

Mounting Position Y1

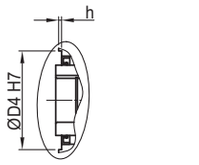

* Details of *1 part

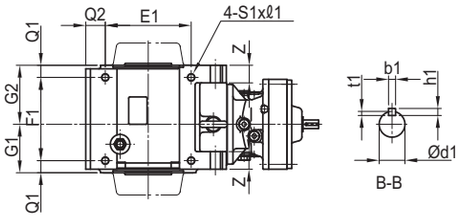

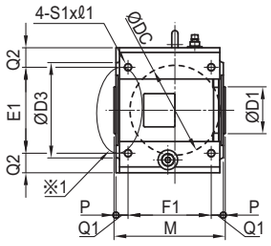

Hollow shaft

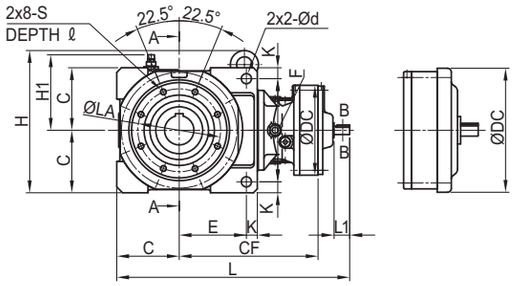

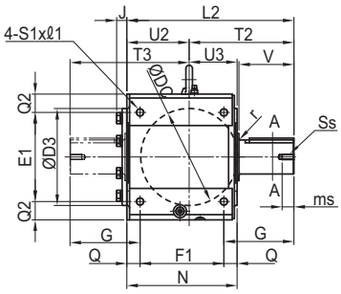

Solid Shaft 4F18□~4F19□

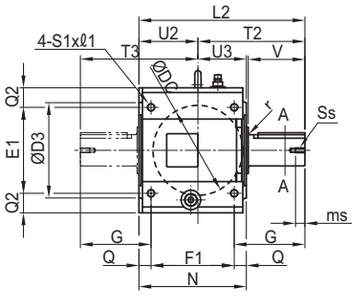

Solid Shaft 4A10□~4E19□

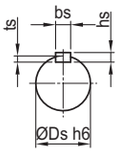

A-A

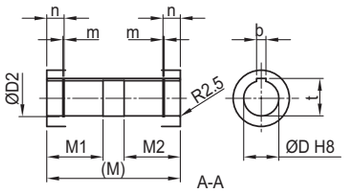

A-A

Mounting Position Y2

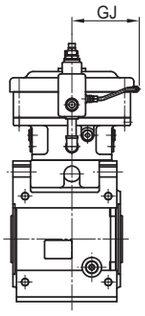

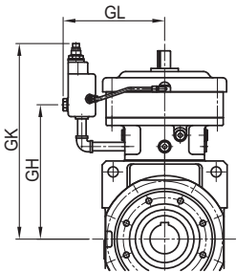

For Supplementary drawings on X-Adaptor and J-Adaptor, refer to pages 211 to 220

Note: Consult us for dimensions if mounting position is other than Y1 and Y2.

Dimensional Drawings

Frame Size	L	CF	DC	d1	L1	b1	h1	t1	Weight [kg]	GJ	GL	GH	GK
4A10 □	399	237	150	15	25	5	5	3	48	98	152	220	339
4A11 □	406	248	162	15	25	5	5	3	54	102	174	228	347
4A12 □	426	244	204	18	35	6	6	3.5	56	162	203	226	364
4A14 □	456	265	230	22	40	6	6	3.5	63	164	231	244	401
4B12 □	483	280	204	18	35	6	6	3.5	85	162	203	263	401
4B14 □	508	298	230	22	40	6	6	3.5	93	164	231	276	433
4B16 □	561	326	300	30	45	8	7	4	117	180	261	293	450
4C14 □	597	356	230	22	40	6	6	3.5	140	164	231	334	491
4C16 □	642	377	317	30	45	8	7	4	163	180	261	344	501
4C17 □	678	393	362	35	55	10	8	5	186	202	289	358	565
4D16 □	744	450	317	30	45	8	7	4	230	180	261	416	573
4D17 □	758	443	362	35	55	10	8	5	249	202	289	408	615
4D18 □	774	446	390	40	65	12	8	5	261	230	314	411	687
4E17 □	808	468	362	35	55	10	8	5	323	202	289	433	640
4E18 □	824	471	390	40	65	12	8	5	344	230	314	436	703
4E19 □	860	490	451	45	70	14	9	5.5	377	260	355	450	717
4F18 □	913	535	390	40	65	12	8	5	541	230	314	499	766
4F19 □	947	552	451	45	70	14	9	5.5	571	260	355	512	779

Frame Size	C E K	F d	Q1 M	Q2 E1	P Z	Q N	G1 G2 F1	H H1	D4 h	D b t	D1 D2 D3	M1 M2	m n	LA	S ℓ	S1 ℓ1	L2 U2 T2	U3 J T3	V G	Ds r	Ss ms	bs hs ts
4A10 □	110	184	23	35	5	23	96	276	130	55	85	85	2.2		M10	M12	301	95.5	90	50	M10	14
4A11 □ 4A12 □	114						111			16	58			155			110.5	—				9
4A14 □	18	18	216	150	35	206	160	141	4	59.3	175	85	30		17	20	190.5	206	118	3	20	5.5
4B12 □	130	214	27	35	5	27	122	308	150	65	100	100	2.7		M12	M16	369	122	115	65	M12	18
4B14 □	142						127			18	68			175			127	—				11
4B16 □	23	22	259	190	40	249	195	161	4	69.4	199	100	30		20	26	242	247	147	3	24	7
4C14 □	160	264	31	50	5	31	124	364	180	75	120	120	2.7		M16	M20	425	124	145	80	M12	22
4C16 □	172						151			20	78			212			151	—				14
4C17 □	28	26	285	220	45	275	213	193	5	79.9	244	120	37		26	33	274	301	181	5	24	9
4D16 □	190	310	36	65	7	36	148	424	210	85	140	145	3.2		M20	M24	503	148	170	95	M20	25
4D17 □	193						178			22	88.5			255			178	—				14
4D18 □	35	33	340	250	55	326	254	223	5	90.4	295	145	37		33	40	325	355	213	5	40	9
4E17 □	215	360	38	65	7	38	156	498	240	100	160	165	3.2		M20	M24	566	156	200	110	M20	28
4E18 □	230						203			28	104			280			203	—				16
4E19 □	35	33	373	300	55	359	283	248	5	106.4	320	165	37		35	40	363	410	246.5	5	40	10
4F18 □	240	400	50.5	70	7	50.5	183	590	260	120	180	194	4.2		M24	M30	638	183	210	130	M20	32
4F19 □	252						238			32	124			320			238	39				18
	45	39	435	340	70	421	320	273	5	127.4	370	189	49		40	50	400	455	267.5	5	45	11

Notes: 1. Mark ◊ in model numbers represents output shaft direction symbol H, V, or W. For details, refer to page 23.
2. Each □ mark in the "Frame Size" column in the dimensions table represents 0 or 5.
3. The dimension tolerance of the output shaft end of the solid shaft is in accordance with "h6" in JIS B 0401-1976.
4. The dimension tolerance of the output shaft end of the hollow shaft is in accordance with "H8" in JIS B 0401-1976.
5. Dimensions of keyway: According to the parallel key (standard class) in JIS B 1301-1976.
6. For details of the output shaft of the solid shaft section, refer to pages 224.
7. For details of the input shaft, refer to page 223.
8. The weights on the dimensional drawings are for the hollow shaft units. For the solid shaft units, add the value in the table below.
9. The dimensions and weights on the dimensional drawings are subject to change without prior notice.

Additional weight values for solid shaft units [kg]

Frame Size	Output Shaft One Side (L, R)	Output Shaft Both Side (T)
4A	4	7
4B	8	15
4C	12	22
4D	19	33
4E	30	53
4F	50	82

For Supplementary drawing on X-Adaptor and J-Adaptor, refer to pages 211 to 220

Dimensional Drawings

■ Shaft Mount for Hollow Shafts and Case Mount for Solid Shafts / Bevel + Cyclo Double Stage Type

L ◊ Y - Reducer's frame size - Reduction ratio

Mounting Position Y1

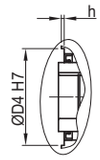

* Details of *1 part

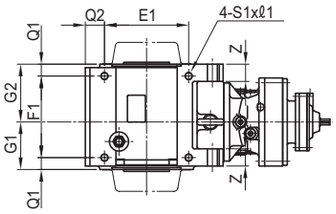

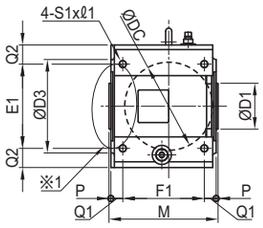

Hollow shaft

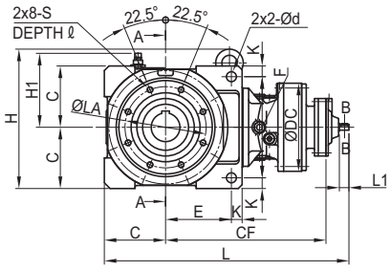

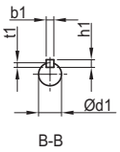

B-B

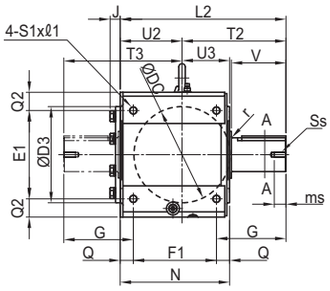

Solid Shaft 4F18DA～4F19DB

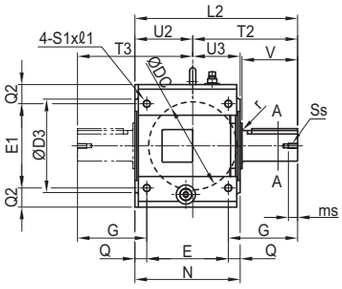

Solid Shaft 4A10DA～4E18DB

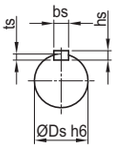

A-A

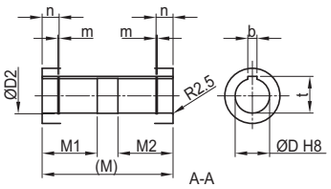

A-A

Mounting Position Y2

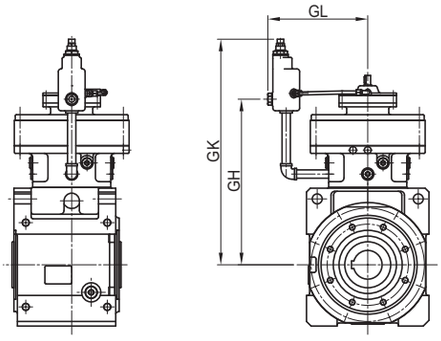

For Supplementary drawings on X-Adaptor and J-Adaptor, refer to pages 211 to 220

Note: Consult us for dimensions if mounting position is other than Y1 and Y2.

Dimensional Drawings

Frame Size	L	CF	DC	d1	L1	b1	h1	t1	Weight [kg]	GL	GH	GK
4A10DA	448	285	150	12	25	4	4	2.5	50	152	278	397
4A12DA	460	297	204	12	25	4	4	2.5	58	203	290	428
4A12DB	479	309	204	15	25	5	5	3	61	203	299	437
4B12DA	517	334	204	12	25	4	4	2.5	87	203	327	465
4B12DB	536	346	204	15	25	5	5	3	90	203	336	474
4B14DA	534	351	230	12	25	4	4	2.5	90	231	349	506
4B14DB	550	360	230	15	25	5	5	3	94	231	353	510
4C14DA	623	410	230	12	25	4	4	2.5	137	231	407	564
4C14DB	639	419	230	15	25	5	5	3	141	231	411	568
4C14DC	645	433	230	15	25	5	5	3	142	231	418	575
4C16DA	662	442	300	15	25	5	5	3	164	261	433	590
4D16DA	765	515	300	15	25	5	5	3	231	261	505	662
4D16DB	771	529	300	15	25	5	5	3	233	261	512	669
4D17DA	759	509	340	15	25	5	5	3	245	289	496	703
4D17DB	765	523	340	15	25	5	5	3	247	289	503	710
4D17DC	790	527	340	18	35	6	6	3.5	252	289	508	715
4D18DA	773	531	370	15	25	5	5	3	288	314	511	787
4D18DB	823	553	370	22	40	6	6	3.5	299	314	527	794
4E17DA	809	534	340	15	25	5	5	3	319	289	521	728
4E17DB	815	548	340	15	25	5	5	3	321	289	528	735
4E17DC	840	552	340	18	35	6	6	3.5	326	289	533	740
4E18DA	823	556	370	15	25	5	5	3	363	314	536	803
4E18DB	874	578	370	22	40	6	6	3.5	374	314	522	819
4F18DA	911	619	370	15	25	5	5	3	539	314	599	866
4F18DB	962	641	370	22	40	6	6	3.5	550	314	615	882
4F19DA	956	643	430	18	35	6	6	3.5	586	355	624	891
4F19DB	980	659	430	22	40	6	6	3.5	588	355	633	900

Frame Size	C E K	F d	Q1 M	Q2 E1	P Z	Q N	G1 G2 F1	H H1	D4 h	D b t	D1 D2 D3	M1 M2	m n	LA	S ℓ	S1 ℓ1	L2 U2 T2	U3 J T3	V G	Ds r	Ss ms	bs hs ts
4A10DA	110	184	23	35	5	23	96	276	130	55	85	85	2.2		M10	M12	301	95.5	90	50	M10	14
4A12DA	114						111			16	58			155			110.5	—				9
4A12DB	18	18	216	150	35	206	160	141	4	59.3	175	85	30		17	20	190.5	206	118	3	20	5.5
4B12DA	130	214	27	35	5	27	122	308	150	65	100	100	2.7		M12	M16	369	122	115	65	M12	18
4B12DB 4B14DA	142						127			18	68			175			127	—				11
4B14DB	23	22	259	190	40	249	195	161	4	69.4	199	100	30		20	26	242	247	147	3	24	7
4C14DA	160	264	31	50	5	31	124	364	180	75	120	120	2.7		M16	M20	425	124	145	80	M12	22
4C14DB 4C14DC	172						151			20	78			212			151	—				14
4C16DA	28	26	285	220	45	275	213	193	5	79.9	244	120	37		26	33	274	301	181	5	24	9
4D16DA 4D16DB 4D17DA 4D17DB 4D17DC 4D18DA	190 193	310	36	65	7	36	148 178	424	210	85 22	140 88.5	145	3.2	 255	M20	M24	503 178	148 —	170	95	M20	25 14
4D18DB	35	33	340	250	55	326	254	223	5	90.4	295	145	37		33	40	325	355	213	5	40	9
4E17DA 4E17DB	215	360	38	65	7	38	156	498	240	100	160	165	3.2		M20	M24	566	156	200	110	M20	28
4E17DC 4E18DA	230						203			28	104			280			203	—				16
4E18DB	35	33	373	300	55	359	283	248	5	106.4	320	165	37		35	40	363	410	246.5	5	40	10
4F18DA 4F18DB	240	400	50.5	70	7	50.5	183	590	260	120	180	194	4.2		M24	M30	638	183	210	130	M20	32
4F19DA	252						238			32	124			320			238	39				18
4F19DB	45	39	435	340	70	421	320	273	5	127.4	370	189	49		40	50	400	455	267.5	5	45	11

Notes: 1. Mark ◊ in model numbers represents output shaft direction symbol H, V, or W. For details, refer to page 23.
2. The dimension tolerance of the output shaft end of the solid shaft is in accordance with “h6” in JIS B 0401-1976.
3. The dimension tolerance of the output shaft bore diameter of the hollow shaft is in accordance with “H8” in JIS B 0401-1976.
4. Dimensions of keyway: According to the parallel key (standard class) in JIS B 1301-1976.
5. For details of the output shaft section of each solid shaft, refer to pages 224.
6. For details of the input shaft, refer to page 223.
7. The weight values in the table are for the hollow shaft units. For the solid shaft units, add the value in the table below.
8. The dimensions and weights on the dimensional drawings are subject to change without prior notice.

Additional weight values for solid shaft units [kg]

Frame Size	Output Shaft One Side (L, R)	Output Shaft Both Side (T)
4A	4	7
4B	8	15
4C	12	22
4D	19	33
4E	30	53
4F	50	82

For Supplementary drawings on X-Adaptor and J-Adaptor, refer to pages 211 to 220

Dimensional Drawings

■ Flange Mount for Hollow Shafts and for Solid Shafts / Bevel + Cyclo Single Stage Type

L ◊ F - Reducer's frame size - Reduction ratio

Mounting Position F1 G1

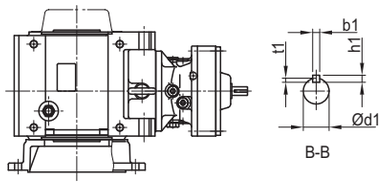

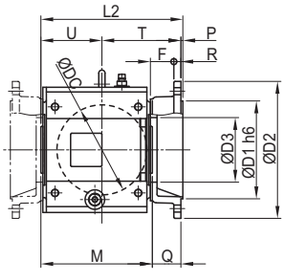

Hollow shaft

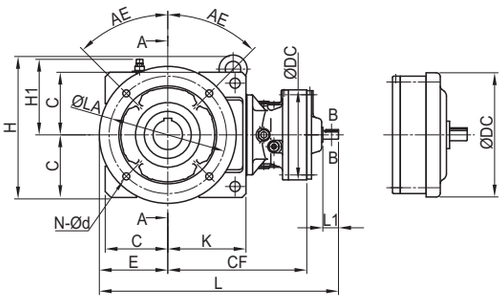

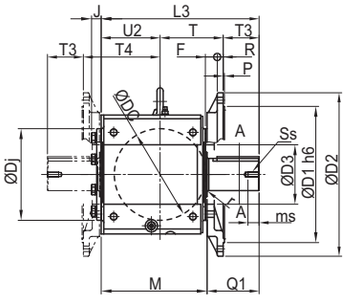

Solid Shaft 4F18□～4F19□

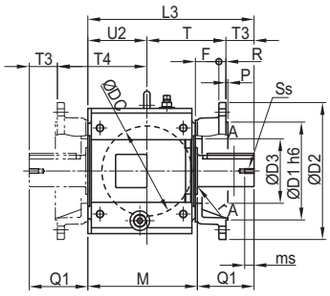

Solid Shaft 4A10□～4E19□

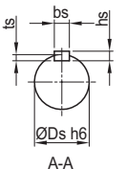

A-A

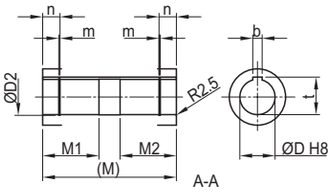

A-A

Mounting Position F2 G2

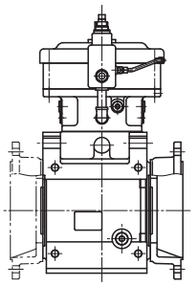

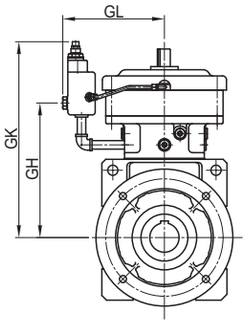

For Supplementary drawings on X-Adaptor and J-Adaptor, refer to pages 211 to 220

Note: Consult us for dimensions if mounting position is other than F1, F2, G1 and G2..

Dimensional Drawings

Frame Size	L	CF	DC	d1	L1	b1	h1	t1	Weight [kg]	GJ	GL	GH	GK
4A10 □	414	237	150	15	25	5	5	3	55	98	152	220	339
4A11 □	421	248	162	15	25	5	5	3	61	102	174	228	347
4A12 □	441	244	204	18	35	6	6	3.5	63	162	203	226	364
4A14 □	471	265	230	22	40	6	6	3.5	70	164	231	244	401
4B12 □	503	280	204	18	35	6	6	3.5	94	162	203	263	401
4B14 □	528	298	230	22	40	6	6	3.5	102	164	231	276	433
4B16 □	581	326	317	30	45	8	7	4	126	180	261	293	450
4C14 □	612	356	230	22	40	6	6	3.5	155	164	231	334	491
4C16 □	657	377	317	30	45	8	7	4	178	180	261	344	501
4C17 □	693	393	362	35	55	10	8	5	201	202	289	358	565
4D16 □	779	450	317	30	45	8	7	4	255	180	261	416	573
4D17 □	793	443	362	35	55	10	8	5	274	202	289	408	615
4D18 □	809	446	390	40	65	12	8	5	286	230	314	411	687
4E17 □	818	468	362	35	55	10	8	5	350	202	289	433	640
4E18 □	834	471	390	40	65	12	8	5	371	230	314	436	703
4E19 □	870	490	451	45	70	14	9	5.5	403	260	355	450	717
4F18 □	1003	535	390	40	65	12	8	5	614	230	314	499	766
4F19 □	1037	552	451	45	70	14	9	5.5	643	260	355	512	779

Frame Size	E C K	H H1	L2 U T	M Q	F P R	D b t	D1 D2 D3	M1 M2	m n	N d	AE LA	L3 T3 Q1	U2 J T4	Ds r	Ss ms	bs hs ts
4A10 □	125	276	280	216	50	55	180	85	2.2	4	45	306	115.5	50	M10	14
4A11 □ 4A12 □	110		115.5		4	16	250					30	—			9
4A14 □	132	141	160.5	60	15	59.3	120	85	30	14	215	90	176	3	20	5.5
4B12 □	150	308	324	245	50	65	230	100	2.7	4	45	369	127	65	M12	18
4B14 □	130		132		4	18	300					54	—			11
4B16 □	165	161	188	61	16	69.4	140	100	30	14	265	115	193	3	24	7
4C14 □	175	364	363	280	60	75	250	120	2.7	4	45	425	151	80	M12	22
4C16 □	160		156		5	20	350					72	—			14
4C17 □	200	193	202	73	18	79.9	165	120	37	18	300	145	229	5	24	9
4D16 □	225	424	425	333	65	85	350	145	3.2	8	22.5	503	178	95	M20	25
4D17 □	190		185		5	22	450					90	—			14
4D18 □	228	223	235	80	22	90.4	195	145	37	18	400	170	265	5	40	9
4E17 □	225	498	458	373	65	100	350	165	3.2	8	22.5	566	203	110	M20	28
4E18 □	215		210		5	28	450					120	—			16
4E19 □	265	248	243	80	22	106.4	220	165	37	18	400	200	290	5	40	10
4F18 □	330	590	505	435	48	120	550	194	4.2	8	22.5	638	238	130	M20	32
4F19 □	240		245		5	32	660					145	39			18
	297	273	255	65	24	127.4	240	189	49	24	600	210	310	5	45	11

Notes: 1. Mark ◊ in model numbers represents output shaft direction symbol H, V, or W. For details, refer to page 23.
2. Each □ mark in the "Frame Size" column in the dimensions table represents 0 or 5.
3. The dimension tolerance of the output shaft end of the solid shaft is in accordance with "h6" in JIS B 0401-1976.
4. The dimension tolerance of the output shaft bore diameter of the hollow shaft is in accordance with "H8" in JIS B 0401-1976.
5. Dimensions of keyway: According to the parallel key (standard class) in JIS B 1301-1976.
6. For details of the output shaft section of each solid shaft, refer to pages 224.
7. For details of the input shaft, refer to page 223
8. The weight values in the table are for the hollow shaft units. For the solid shaft units, add the value in the table below.
9. The dimensions and weights on the dimensional drawings are subject to change without prior notice.

Additional weight values for solid shaft units [kg]

Frame Size	Output Shaft One Side (L, R)
4A	4
4B	8
4C	12
4D	19
4E	30
4F	50

For Supplementary drawings on X-Adaptor and J-Adaptor, refer to pages 211 to 220

Dimensional Drawings

■ Flange Mount for Hollow Shafts and for Solid Shafts / Bevel + Cyclo Double Stage Type

L ◊ F - Reducer's frame size - Reduction ratio

Mounting Position F1 G1

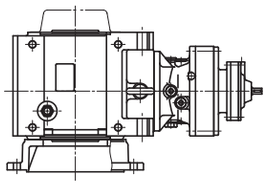

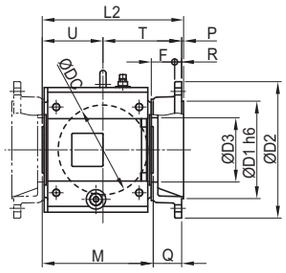

Hollow shaft

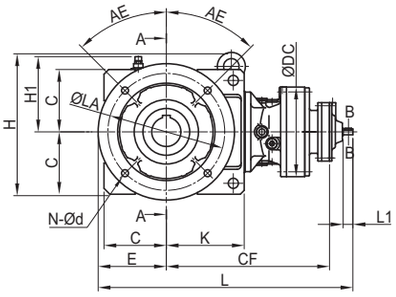

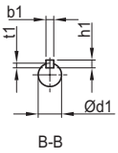

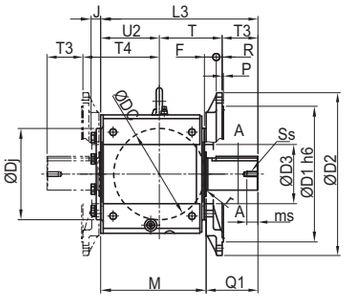

Solid Shaft 4F18DA～4F19DB

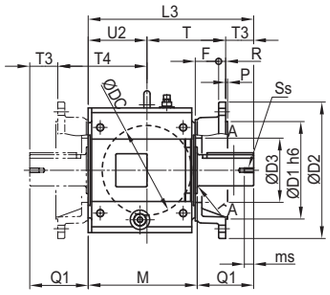

Solid Shaft 4A10DA～4E18DB

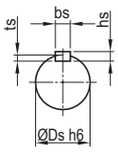

A-A

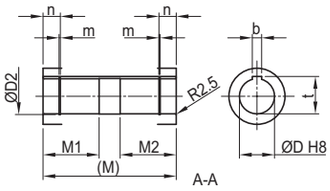

A-A

Mounting Position F2 G2

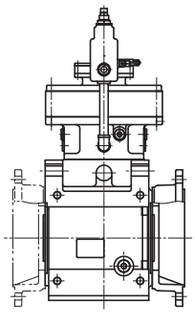

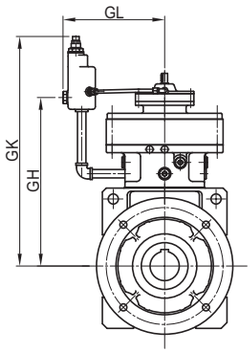

For Supplementary drawings on X-Adaptor and J-Adaptor, refer to pages 211 to 220

Note: Consult us for dimensions if mounting position is other than F1, F2, G1 and G2..

Dimensional Drawings

Frame Size	L	CF	DC	d1	L1	b1	h1	t1	Weight [kg]	GL	GH	GK
4A10DA	463	285	150	12	25	4	4	2.5	57	152	278	397
4A12DA	475	297	204	12	25	4	4	2.5	65	203	290	428
4A12DB	494	309	204	15	25	5	5	3	68	203	299	437
4B12DA	537	334	204	12	25	4	4	2.5	96	203	327	465
4B12DB	556	346	204	15	25	5	5	3	99	203	336	474
4B14DA	554	351	230	12	25	4	4	2.5	99	231	349	506
4B14DB	570	360	230	15	25	5	5	3	103	231	353	510
4C14DA	638	410	230	12	25	4	4	2.5	152	231	407	564
4C14DB	654	419	230	15	25	5	5	3	156	231	411	568
4C14DC	660	433	230	15	25	5	5	3	157	231	418	575
4C16DA	667	442	300	15	25	5	5	3	179	261	433	590
4D16DA	800	515	300	15	25	5	5	3	256	261	505	662
4D16DB	806	529	300	15	25	5	5	3	258	261	512	669
4D17DA	794	509	340	15	25	5	5	3	270	289	496	703
4D17DB	800	523	340	15	25	5	5	3	272	289	503	710
4D17DC	825	527	340	18	35	6	6	3.5	277	289	508	715
4D18DA	808	531	370	15	25	5	5	3	313	314	511	787
4D18DB	858	553	370	22	40	6	6	3.5	324	314	527	794
4E17DA	819	534	340	15	25	5	5	3	346	289	521	728
4E17DB	825	548	340	15	25	5	5	3	348	289	528	735
4E17DC	850	552	340	18	35	6	6	3.5	353	289	533	740
4E18DA	833	556	370	15	25	5	5	3	390	314	536	803
4E18DB	883	578	370	22	40	6	6	3.5	401	314	522	819
4F18DA	1001	619	370	15	25	5	5	3	612	314	599	866
4F18DB	1051	641	370	22	40	6	6	3.5	623	314	615	882
4F19DA	1046	643	430	18	35	6	6	3.5	659	355	624	891
4F19DB	1069	659	430	22	40	6	6	3.5	661	355	633	900

Frame Size	E C K	H H1	L2 U T	M Q	F P R	D b t	D1 D2 D3	M1 M2	m n	N d	AE LA	L3 T3 Q1	U2 J T4	Ds r	Ss ms	bs hs ts
4A10DA	125	276	280	216	50	55	180	85	2.2	4	45	306	115.5	50	M10	14
4A12DA	110		115.5		4	16	250					30	—			9
4A12DB	132	141	160.5	60	15	59.3	120	85	30	14	215	90	176	3	20	5.5
4B12DA	150	308	324	245	50	65	230	100	2.7	4	45	369	127	65	M12	18
4B12DB 4B14DA	130		132		4	18	330					54	—			11
4B14DB	165	161	188	61	16	69.4	140	100	30	14	265	115	193	3	24	7
4C14DA	175	364	363	280	60	75	250	120	2.7	4	45	425	151	80	M12	22
4C14DB 4C14DC	160		156		5	20	350					72	—			14
4C16DA	200	193	202	73	18	79.9	165	120	37	18	300	145	229	5	24	9
4D16DA 4D16DB 4D17DA 4D17DB 4D17DC 4D18DA	225 190	424	425 185	333	65 5	85 22	350 450	145	3.2	8	22.5	503 90	178 —	95	M20	25 14
4D18DB	228	223	235	80	22	90.4	195	145	37	18	400	170	265	5	40	9
4E17DA 4E17DB 4E17DC 4E18DA	225 215	498	458 210	373	65 5	100 28	350 450	165	3.2	8	22.5	566 120	203 —	110	M20	28 16
4E18DB	265	248	243	80	22	106.4	220	165	37	18	400	200	290	5	40	10
4F18DA 4F18DB 4F19DA	330 240	590	505 245	435	48 5	120 32	550 660	194	4.2	8	22.5	638 145	238 39	130	M20	32 18
4F19DB	297	273	255	65	24	127.4	240	189	49	24	600	210	310	5	45	11

Notes: 1. Mark ◊ in model numbers represents output shaft direction symbol H, V, or W. For details, refer to page 23.
2. The dimension tolerance of the output shaft end of the solid shaft is in accordance with “h6” in JIS B 0401-1976.
3. The dimension tolerance of the output shaft bore diameter of the hollow shaft is in accordance with “H8” in JIS B 0401-1976.
4. Dimensions of keyway: According to the parallel key (standard class) in JIS B 1301-1976.
5. For details of the output shaft of each solid shaft, refer to pages 224.
6. For details of the input shaft, refer to page 223
7. The weight values in the table are for the hollow shaft units. For those for the solid shaft units, add the value in the table below.
8. The dimensions and weights on the dimensional drawings are subject to change without prior notice.

Additional weight values for solid shaft units [kg]

Frame Size	Output Shaft One Side (L, R)
4A	4
4B	8
4C	12
4D	19
4E	30
4F	50

For Supplementary drawings on X-Adaptor and J-Adaptor, refer to pages 211 to 220

Dimensional Drawings

■ Foot Mount for Solid Shafts / Bevel + Cyclo Single Stage Type

L ◊ H - Reducer's frame size - Reduction ratio

Mounting Position K1

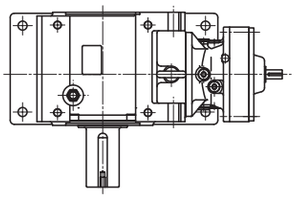

4F18□~4F19□

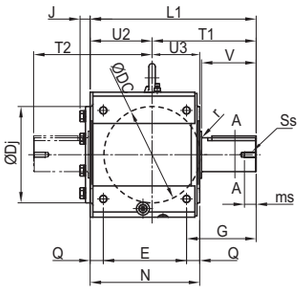

4A10□~4E19□

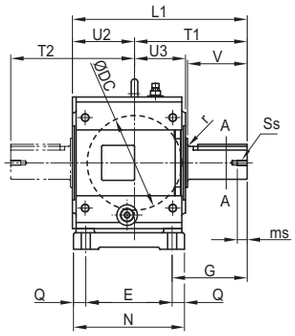

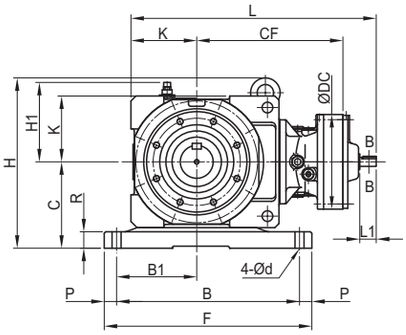

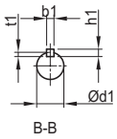

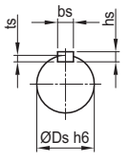

A-A

Mounting Position V2

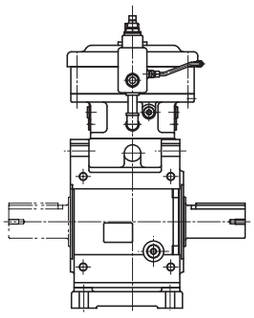

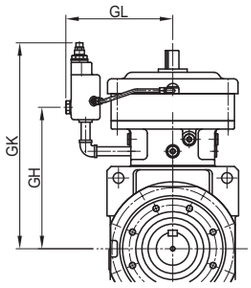

For Supplementary drawings on X-Adaptor and J-Adaptor, refer to pages 211 to 220

Note: Consult us for dimensions if mounting position is other than K1 and V2..

Dimensional Drawings

Frame Size	L	CF	DC	d1	L1	b1	h1	t1	Weight [kg]	GJ	GL	GH	GK
4A10 □	399	237	150	15	25	5	5	3	60	98	152	220	339
4A11 □	406	248	162	15	25	5	5	3	66	102	174	228	347
4A12 □	426	244	204	18	35	6	6	3.5	68	162	203	226	364
4A14 □	456	265	230	22	40	6	6	3.5	75	164	231	244	401
4B12 □	483	280	204	18	35	6	6	3.5	109	162	203	263	401
4B14 □	508	298	230	22	40	6	6	3.5	117	164	231	276	433
4B16 □	561	326	317	30	45	8	7	4	141	180	261	293	450
4C14 □	597	356	230	22	40	6	6	3.5	181	164	231	334	491
4C16 □	642	377	317	30	45	8	7	4	204	180	261	344	501
4C17 □	678	393	362	35	55	10	8	5	227	202	289	358	565
4D16 □	744	449	317	30	45	8	7	4	292	180	261	416	573
4D17 □	758	443	362	35	55	10	8	5	331	202	289	408	615
4D18 □	774	446	390	40	65	12	8	5	304	230	314	411	687
4E17 □	808	468	362	35	55	10	8	5	412	202	289	433	640
4E18 □	824	471	390	40	65	12	8	5	403	230	314	436	703
4E19 □	860	490	451	45	70	14	9	5.5	436	260	355	450	717
4F18 □	913	535	390	40	65	12	8	5	644	230	314	499	766
4F19 □	947	552	451	45	70	14	9	5.5	674	260	355	512	779

Frame Size	C K	H H1	F B B1	E N R	P Q d	L1 U2 T1	U3 J T2	V G	Ds r	Ss ms	bs hs ts
4A10 □	140	306	320	160	20	301	95.5	90	50	M10	14
4A11 □ 4A12 □			280	202	21	110.5	—				9
4A14 □	110	141	135	25	14	190.5	206	118	3	20	5.5
4B12 □	170	346	385	195	20	369	122	115	65	M12	18
4B14 □			345	245	25	127	—				11
4B16 □	130	161	160	35	18	242	247	147	3	24	7
4C14 □	210	414	505	210	30	425	124	145	80	M12	22
4C16 □			445	270	30	151	—				14
4C17 □	160	193	195	40	22	274	301	182.5	5	24	9
4D16 □	245	479	560	260	30	503	148	170	95	M20	25
4D17 □			500	320	30	178	—				14
4D18 □	190	223	235	45	26	325	355	210	5	40	9
4E17 □	275	558	650	280	35	566	156	200	110	M20	28
4E18 □			580	355	37.5	203	—				16
4E19 □	215	248	270	45	33	363	410	245	5	40	10
4F18 □	320	670	740	320	35	638	183	210	130	M20	32
4F19 □			670	400	40	238	39				18
	240	273	300	65	33	400	455	268	5	45	11

Notes: 1. Mark ◊ in model numbers represents output shaft direction symbol H, V, or W. For details, refer to page 23.
2. Each □ mark in the "Frame Size" column in the dimensions table represents 0 or 5.
3. The dimension tolerance of the output shaft end of the solid shaft is in accordance with "h6" in JIS B 0401-1976.
4. Dimensions of keyway: According to the parallel key (standard class) in JIS B 1301-1976.
5. For details of the output shaft of each solid shaft, refer to pages 224.
6. For details of the input shaft, refer to page 223
7. The weight values in the table are for the hollow shaft units. For the solid shaft units, add the value in the table below.
8. The dimensions and weights on the dimensional drawings are subject to change without prior notice.

Additional weight values for both side output shaft units [kg]

Frame Size	Both-Side Output Shaft (T)
4A	7
4B	15
4C	22
4D	33
4E	53
4F	82

For Supplementary drawings on X-Adaptor and J-Adaptor, refer to pages 211 to 220

Dimensional Drawings

■ Foot Mount for Solid Shafts / Bevel + Cyclo Double Stage Type

L ◊ H - Reducer's frame size - Reduction ratio

Mounting Position K1

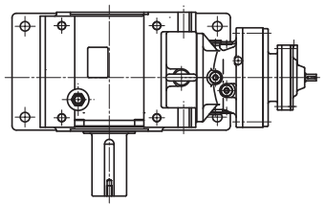

4F18DA～4F19DB

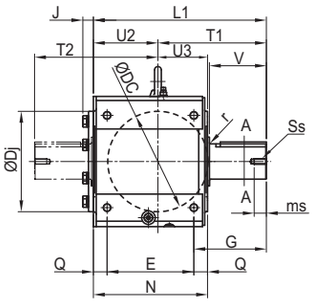

4A10DA～4E18DB

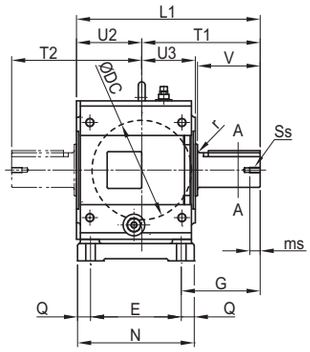

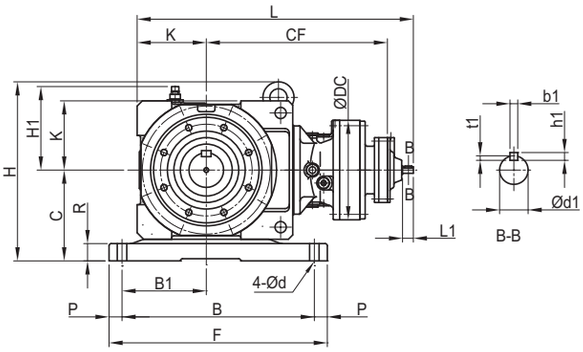

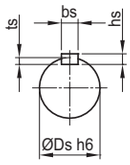

A-A

Mounting Position V2

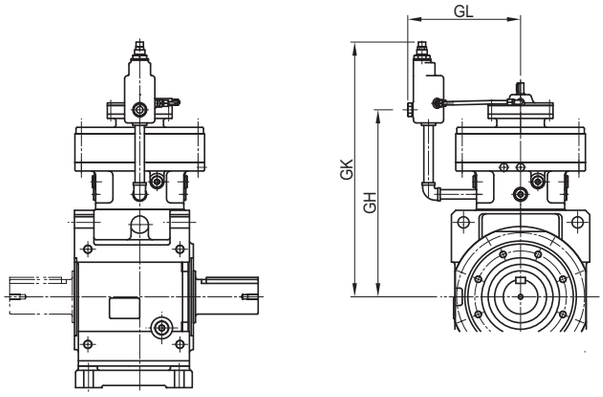

For Supplementary drawings on X-Adaptor and J-Adaptor, refer to pages 211 to 220

Note: Consult us for dimensions if mounting position is other than K1 and V2..

Dimensional Drawings

Frame Size	L	CF	DC	d1	L1	b1	h1	t1	Weight [kg]	GL	GH	GK
4A10DA	448	285	150	12	25	4	4	2.5	62	152	278	397
4A12DA	460	297	204	12	25	4	4	2.5	70	203	290	428
4A12DB	479	309	204	15	25	5	5	3	73	203	299	437
4B12DA	517	334	204	12	25	4	4	2.5	111	203	327	465
4B12DB	536	346	204	15	25	5	5	3	114	203	336	474
4B14DA	534	351	230	12	25	4	4	2.5	114	231	349	506
4B14DB	550	360	230	15	25	5	5	3	118	231	353	510
4C14DA	623	410	230	12	25	4	4	2.5	178	231	407	564
4C14DB	639	419	230	15	25	5	5	3	182	231	411	568
4C14DC	645	433	230	15	25	5	5	3	183	231	418	575
4C16DA	662	442	300	15	25	5	5	3	205	261	433	590
4D16DA	765	515	300	15	25	5	5	3	293	261	505	662
4D16DB	771	529	300	15	25	5	5	3	295	261	512	669
4D17DA	759	509	340	15	25	5	5	3	307	289	496	703
4D17DB	765	523	340	15	25	5	5	3	309	289	503	710
4D17DC	790	527	340	18	35	6	6	3.5	314	289	508	715
4D18DA	773	531	370	15	25	5	5	3	331	314	511	787
4D18DB	823	553	370	22	40	6	6	3.5	342	314	527	794
4E17DA	809	534	340	15	25	5	5	3	408	289	521	728
4E17DB	815	548	340	15	25	5	5	3	410	289	528	735
4E17DC	840	552	340	18	35	6	6	3.5	415	289	533	740
4E18DA	823	556	370	15	25	5	5	3	422	314	536	803
4E18DB	873	578	370	22	40	6	6	3.5	433	314	522	819
4F18DA	911	619	370	15	25	5	5	3	642	314	599	866
4F18DB	961	641	370	22	40	6	6	3.5	653	314	615	882
4F19DA	956	643	430	18	35	6	6	3.5	689	355	624	891
4F19DB	979	659	430	22	40	6	6	3.5	691	355	633	900

Frame Size	C K	H H1	F B B1	E N R	P Q d	L1 U2 T1	U3 J T2	V G	Ds r	Ss ms	bs hs ts
4A10DA	140	306	320	160	20	301	95.5	90	50	M10	14
4A12DA			280	202	21	110.5	—				9
4A12DB	110	141	135	25	14	190.5	206	118	3	20	5.5
4B12DA	170	346	385	195	20	369	122	115	65	M12	18
4B12DB 4B14DA			345	245	25	127	—				11
4B14DB	130	161	160	35	18	242	247	147	3	24	7
4C14DA	210	414	505	210	30	425	124	145	80	M12	22
4C14DB 4C14DC			445	270	30	151	—				14
4C16DA	160	193	195	40	22	274	301	182.5	5	24	9
4D16DA 4D16DB 4D17DA 4D17DB 4D17DC 4D18DA	245	479	560 500	260 320	30 30	503 178	148 —	170	95	M20	25 14
4D18DB	190	223	235	45	26	325	355	210	5	40	9
4E17DA 4E17DB 4E17DC 4E18DA	275	558	650 580	280 355	35 37.5	566 203	156 —	200	110	M20	28 16
4E18DB	215	248	270	45	33	363	410	245	5	40	10
4F18DA 4F18DB 4F19DA	320	670	740 670	320 400	35 40	638 238	183 39	210	130	M20	32 18
4F19DB	240	273	300	65	33	400	455	268	5	45	11

Notes: 1. Mark ◊ in model numbers represents output shaft direction symbol H, V, or W. For details, refer to page 23.
2. The dimension tolerance of the output shaft end of the solid shaft is in accordance with “h6” in JIS B 0401-1976.
3. Dimensions of keyway: According to the parallel key (standard class) in JIS B 1301-1976.
4. For details of the output shaft of each solid shaft, refer to pages 224.
5. For details of the input shaft, refer to page 223
6. The weight values in the table are for the hollow shaft units. For the solid shaft units, add the value in the table below.
7. The dimensions and weights on the dimensional drawings are subject to change without prior notice.

Additional weight values for both side output shaft units [kg]

Frame Size	Both-Side Output Shaft (T)
4A	7
4B	15
4C	22
4D	33
4E	53
4F	82

For Supplementary drawings on X-Adaptor and J-Adaptor, refer to pages 211 to 220

Reducers X Adapters Dimension

Single Reduction

These dimensions should be used together with dimensions on page 199 - 210

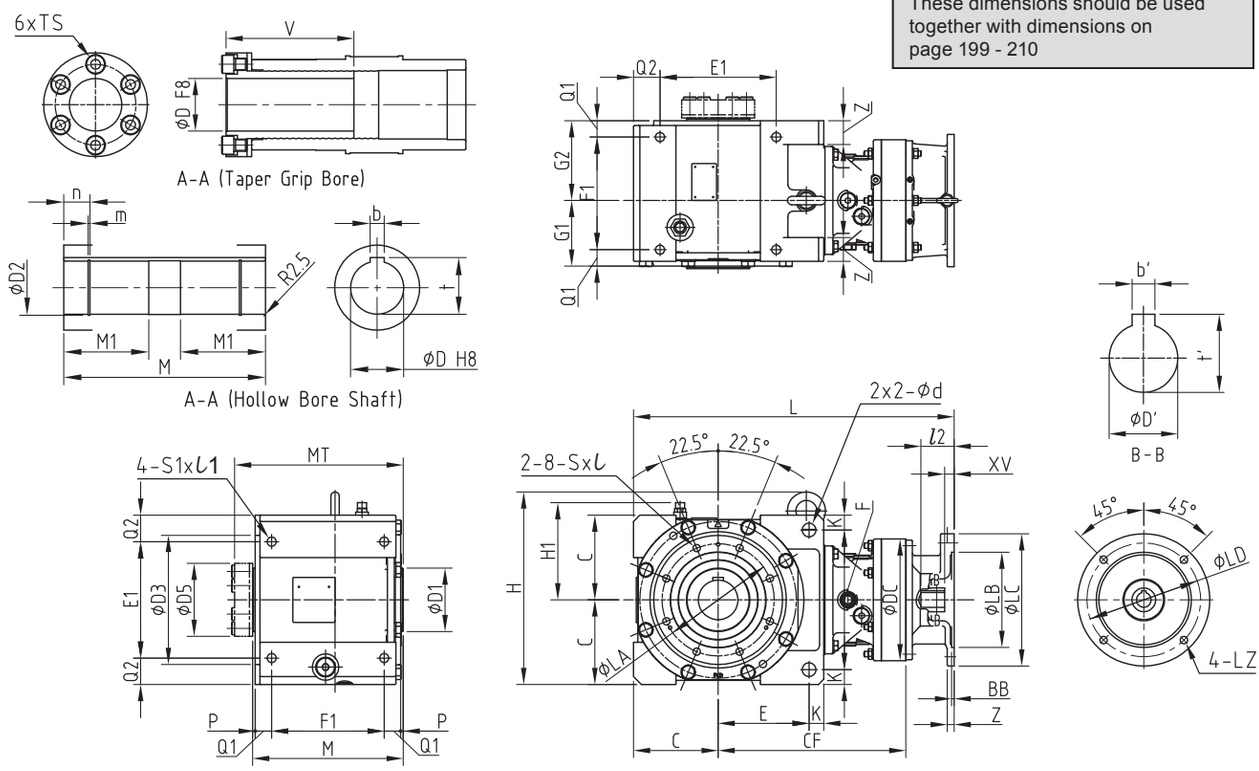

Size	IEC-Size	SSC	LC	LB	Z	BB	LZ	LD	XV	L	D'	b'	t'	V	l2	Weight (kg)
4A10	71/A160	V6B	160	110 H8	11	4.5	9	130	9	407	14 F7	5	16.3	130	30	57
	80/A200	V6C	200	130 H8	12	4.5	11	165	12	433	19 F7	6	21.8	130	40	57
	90/A200	V6D	200	130 H8	12	4.5	11	165	14	433	24 F7	8	27.3	130	50	59
	100/112/A250	V6E	250	180 H8	14	4.5	14	215	18	443	28 F7	8	31.3	130	60	60
4A11	71/A160	V6B	160	110 H8	11	4.5	9	130	9	419	14 F7	5	16.3	130	30	57
	80/A200	V6C	200	130 H8	12	4.5	11	165	12	441	19 F7	6	21.8	130	40	57
	90/A200	V6D	200	130 H8	12	4.5	11	165	14	441	24 F7	8	27.3	130	50	59
	100/112/A250	V6E	250	180 H8	14	6	14	215	18	450	28 F7	8	31.3	130	60	61
4A12	71/A160	V6B	160	110 H8	12	4.5	9	130	9	409	14 F7	5	16.3	130	30	63
	80/A200	V6C	200	130 H8	13	4.5	11	165	12	432	19 F7	6	21.8	130	40	65
	90/A200	V6D	200	130 H8	13	4.5	11	165	14	432	24 F7	8	27.3	130	50	65
	100/112/A250	V6E	250	180 H8	14	5	14	215	19	442	28 F7	8	31.3	130	60	68
	132/A300	V6F	300	230 H8	19	7	14	265	21	468	38 F7	10	41.3	130	82	71
4A14	90/A200	V6D	200	130 H8	11	4.5	11	165	14	456	24 F7	8	27.3	130	50	67
	100/112/A250	V6E	250	180 H8	13	5	14	215	18	466	28 F7	8	31.3	130	63	71
	132/A300	V6F	300	230 H8	17	5	14	265	23	492	38 F7	10	41.3	130	80	74
	160,180/A350	V6G	350	250 H8	16	6	18	300	47	525	42 F7	12	45.3	130	114	80
4B12	71/A160	V6B	160	110 H8	12	4.5	9	130	9	465	14 F7	5	16.3	145	30	87
	80/A200	V6C	200	130 H8	13	4.5	11	165	12	488	19 F7	6	21.8	145	40	88
	90/A200	V6D	200	130 H8	13	4.5	11	165	14	488	24 F7	8	27.3	145	50	88
	100/112/A250	V6E	250	180 H8	14	5	14	215	19	498	28 F7	8	31.3	145	60	92
	132/A300	V6F	300	230 H8	19	7	14	265	21	524	38 F7	10	41.3	145	82	94
4B14	90/A200	V6D	200	130 H8	11	4.5	11	165	14	509	24 F7	8	27.3	145	50	99
	100/112/A250	V6E	250	180 H8	13	5	14	215	18	519	28 F7	8	31.3	145	60	101
	132/A300	V6F	300	230 H8	17	5	14	265	23	545	38 F7	10	41.3	145	80	104
	160,180/A350	V6G	350	250 H8	16	6	18	300	47	578	42 F7	12	45.3	145	110	110
4B16	90/A200	V6D	300	130 H8	34	4.5	14	165	11	582	24 F7	8	27.3	145	54	135
	100/112/A250	V6E	250	180 H8	14	5	14	215	18	542	28 F7	8	31.3	145	60	120
	132/A300	V6F	300	230 H8	16	5	14	265	23	564	38 F7	10	41.3	145	80	125
	160,180/A350	V6G	350	250 H8	16	6	18	300	47	600	42 F7	12	45.3	145	110	132
4C14	90/A200	V6D	200	130 H8	11	4.5	11	165	14	597	24 F7	8	27.3	170	50	144
	100/112/A250	V6E	250	180 H8	13	5	14	215	18	607	28 F7	8	31.3	170	60	148
	132/A300	V6F	300	230 H8	17	5	14	265	23	633	38 F7	10	41.3	170	80	151
	160,180/A350	V6G	350	250 H8	16	6	18	300	47	666	42 F7	12	45.3	170	110	157
4C16	90/A200	V6D	300	130 H8	34	4.5	14	165	11	663	24 F7	8	27.3	170	50	181
	100/112/A250	V6E	250	180 H8	14	5	14	215	18	623	28 F7	8	31.3	170	60	166
	132/A300	V6F	300	230 H8	16	5	14	265	23	645	38 F7	10	41.3	170	80	171
	160,180/A350	V6G	350	250 H8	16	6	18	300	47	681	42 F7	12	45.3	170	110	177
4D16	90/A200	V6D	300	130 H8	34	4.5	14	165	11	766	24 F7	8	27.3	199	50	248
	100/112/A250	V6E	250	180 H8	14	5	14	215	18	726	28 F7	8	31.3	199	60	233
	132/A300	V6F	300	230 H8	16	5	14	265	23	748	38 F7	10	41.3	199	80	238
	160,180/A350	V6G	350	250 H8	16	6	18	300	47	784	42 F7	12	45.3	199	110	244

Reducers X Adapters Dimension

Double Reduction

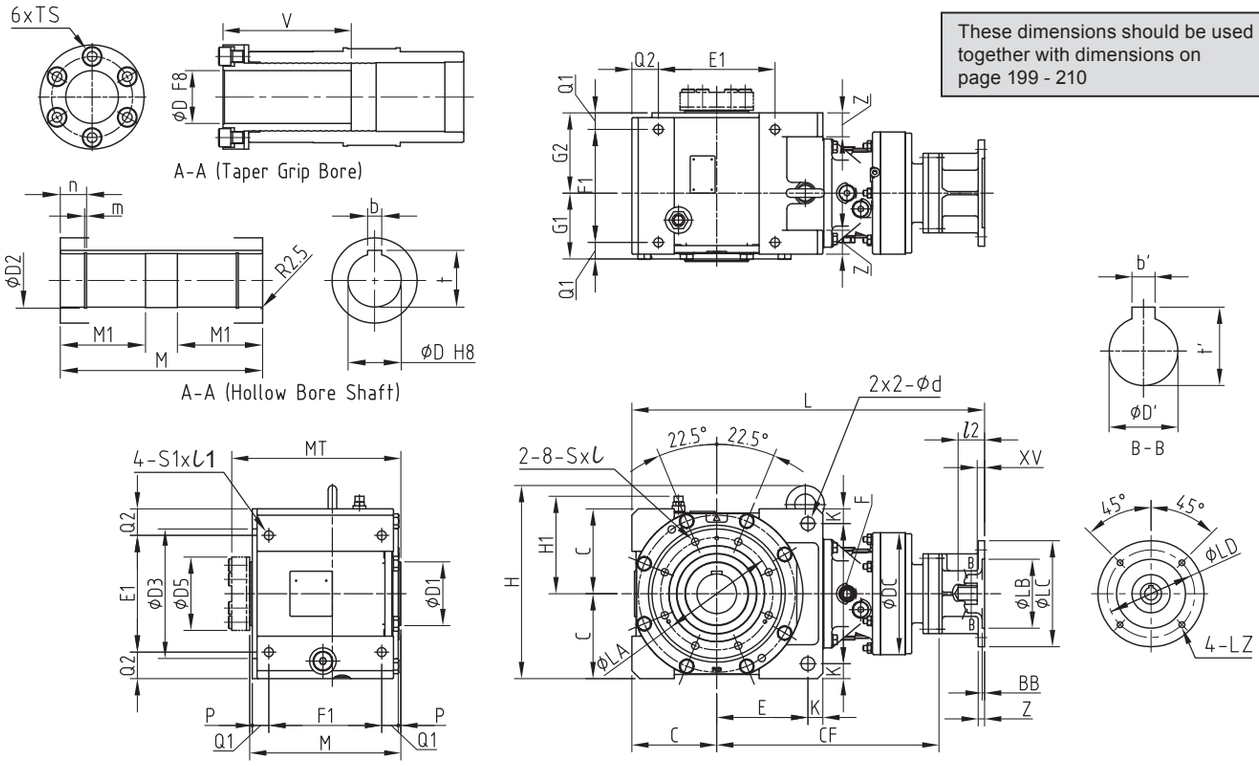

These dimensions should be used together with dimensions on page 199 - 210

Size	IEC-Size	SSC	LC	LB	Z	BB	LZ	LD	XV	L	D'	b'	t'	V	l2	Weight (kg)
4A10DA	71/A160	V6B	160	110 H8	11	4.5	9	130	9	452	14 F7	5	16.3	30	130	53
4A12DA	71/A160	V6B	160	110 H8	11	4.5	9	130	9	464	14 F7	5	16.3	33	130	61
4A12DB	71/A160	V6B	160	110 H8	11	4.5	9	130	9	479	14 F7	5	16.3	32	130	64
	80/A200	V6C	200	130 H8	12	4.5	11	165	12	505	19 F7	6	21.8	43	130	65
	90/A200	V6D	200	130 H8	12	4.5	11	165	14	505	24 F7	8	27.3	53	130	65
	100/112/A250	V6E	250	180 H8	13	5	14	215	18	515	28 F7	8	31.3	60	130	67
4B12DA	71/A160	V6B	160	110 H8	12	4.5	9	130	9	521	14 F7	5	16.3	33	145	90
4B12DB	71/A160	V6B	160	110 H8	11	4.5	9	130	9	536	14 F7	5	16.3	32	145	93
	80/A200	V6C	200	130 H8	12	4.5	11	165	12	562	19 F7	6	21.8	43	145	94
	90/A200	V6D	200	130 H8	12	4.5	11	165	14	562	24 F7	8	27.3	53	145	94
	100/112/A250	V6E	250	180 H8	14	5	14	215	18	572	28 F7	8	31.3	60	145	96
4B14DA	71/A160	V6B	160	110 H8	11	4.5	9	130	9	538	14 F7	5	16.3	30	145	93
4B14DB	71/A160	V6B	160	110 H8	11	4.5	9	130	9	550	14 F7	5	16.3	30	145	96
	80/A200	V6C	200	130 H8	12	4.5	11	165	12	576	19 F7	6	21.8	40	145	98
	90/A200	V6D	200	130 H8	12	4.5	11	165	14	576	24 F7	8	27.3	50	145	98
	100/112/A250	V6E	250	180 H8	14	5	14	215	18	586	28 F7	8	31.3	60	145	100
4C14DA	71/A160	V6B	160	110 H8	11	4.5	9	130	9	627	14 F7	5	16.3	30	170	140
4C14DB	71/A160	V6B	160	110 H8	11	4.5	9	130	9	639	14 F7	5	16.3	30	170	139
	80/A200	V6C	200	130 H8	12	4.5	11	165	12	665	19 F7	6	21.8	40	170	141
	90/A200	V6D	200	130 H8	12	4.5	11	165	14	665	24 F7	8	27.3	50	170	141
	100/112/A250	V6E	250	180 H8	14	5	14	215	18	675	28 F7	8	31.3	60	170	144
4C14DC	71/A160	V6B	160	110 H8	11	4.5	9	130	9	653	14 F7	5	16.3	30	170	144
	80/A200	V6C	200	130 H8	12	4.5	11	165	12	679	19 F7	6	21.8	40	170	146
	90/A200	V6D	200	130 H8	12	4.5	11	165	14	679	24 F7	8	27.3	50	170	146
	100/112/A250	V6E	250	180 H8	14	5	14	215	18	689	28 F7	8	31.3	60	170	148
4C16DA	71/A160	V6B	160	110 H8	11	4.5	9	130	9	662	14 F7	5	16.3	30	170	165
	80/A200	V6C	200	130 H8	12	4.5	11	165	12	688	19 F7	6	21.8	40	170	168
	90/A200	V6D	200	130 H8	12	4.5	11	165	14	688	24 F7	8	27.3	50	170	168
	100/112/A250	V6E	250	180 H8	14	5	14	215	18	698	28 F7	8	31.3	60	170	170

Reducers X Adapters Dimension

Double Reduction

These dimensions should be used together with dimensions on page 199 - 210

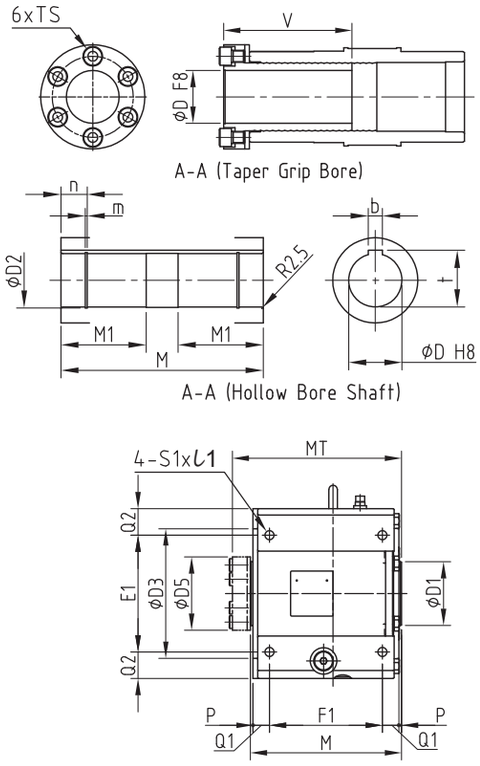

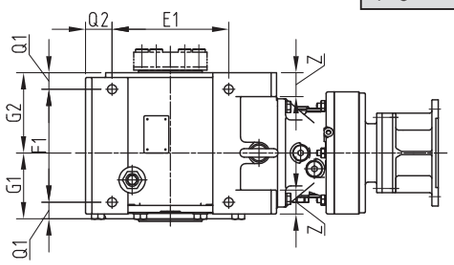

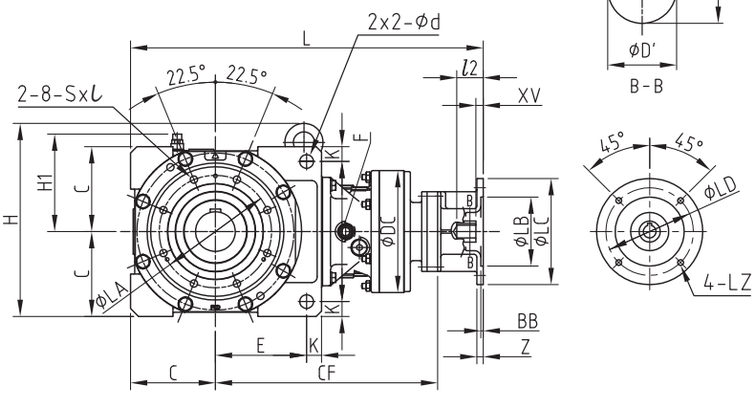

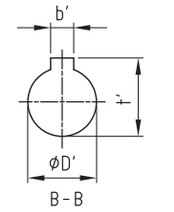

Size	IEC-Size	SSC	LC	LB	Z	BB	LZ	LD	XV	L	D'	b'	t'	V	l2	Weight (kg)
4D16DA	71/A160	V6B	160	110 H8	11	4.5	9	130	9	764	14 F7	5	16.3	30	199	233
	80/A200	V6C	200	130 H8	12	4.5	11	165	12	790	19 F7	6	21.8	40	199	235
	90/A200	V6D	200	130 H8	12	4.5	11	165	14	790	24 F7	8	27.3	53	199	235
	100/112/A250	V6E	250	180 H8	14	5	14	215	18	800	28 F7	8	31.3	60	199	237
4D16DB	71/A160	V6B	160	110 H8	11	4.5	9	130	9	778	14 F7	5	16.3	30	199	235
	80/A200	V6C	200	130 H8	12	4.5	11	165	12	804	19 F7	6	21.8	40	199	237
	90/A200	V6D	200	130 H8	12	4.5	11	165	14	804	24 F7	8	27.3	50	199	237
	100/112/A250	V6E	250	180 H8	14	5	14	215	18	814	28 F7	8	31.3	60	199	239
4D17DA	71/A160	V6B	160	110 H8	11	4.5	9	130	9	759	14 F7	5	16.3	30	199	246
	80/A200	V6C	200	130 H8	12	4.5	11	165	12	785	19 F7	6	21.8	40	199	249
	90/A200	V6D	200	130 H8	12	4.5	11	165	14	785	24 F7	8	27.3	50	199	249
	100/112/A250	V6E	250	180 H8	14	5	14	215	18	795	28 F7	8	31.3	60	199	251
4D17DB	71/A160	V6B	160	110 H8	11	4.5	9	130	9	773	14 F7	5	16.3	30	199	249
	80/A200	V6C	200	130 H8	12	4.5	11	165	12	799	19 F7	6	21.8	40	199	251
	90/A200	V6D	200	130 H8	12	4.5	11	165	14	799	24 F7	8	27.3	50	199	251
	100/112/A250	V6E	250	180 H8	14	5	14	215	18	809	28 F7	8	31.3	60	199	253
4D17DC	71/A160	V6B	160	110 H8	12	4.5	9	130	9	772	14 F7	5	16.3	30	199	253
	80/A200	V6C	200	130 H8	12	4.5	11	165	12	795	19 F7	6	21.8	40	199	255
	90/A200	V6D	200	130 H8	12	4.5	11	165	14	795	24 F7	8	27.3	50	199	255
	100/112/A250	V6E	250	180 H8	14	5	14	215	18	805	28 F7	8	31.3	60	199	259
	132/A300	V6F	300	230 H8	19	7	14	265	21	831	38 F7	10	41.3	82	199	261
4D18DA	71/A160	V6B	160	110 H8	12	4.5	9	130	9	846	14 F7	5	16.3	30	199	290
	80/A200	V6C	200	130 H8	12	4.5	11	165	12	872	19 F7	6	21.8	40	199	292
	90/A200	V6D	200	130 H8	12	4.5	11	165	14	872	24 F7	8	27.3	50	199	292
	100/112/A250	V6E	250	180 H8	14	4.5	14	215	18	882	28 F7	8	31.3	60	199	294
4D18DB	80/A200	V6C	200	130 H8	11	4.5	11	165	12	889	19 F7	6	21.8	52	199	303
	90/A200	V6D	200	130 H8	11	4.5	11	165	14	889	24 F7	8	27.3	50	199	303
	100/112/A250	V6E	250	180 H8	13	4.5	14	215	18	899	28 F7	8	31.3	60	199	305
	132/A300	V6F	300	230 H8	17	5	14	265	23	925	38 F7	10	41.3	80	199	309

Reducers X Adapters Dimension

Double Reduction

These dimensions should be used together with dimensions on page 199 - 210

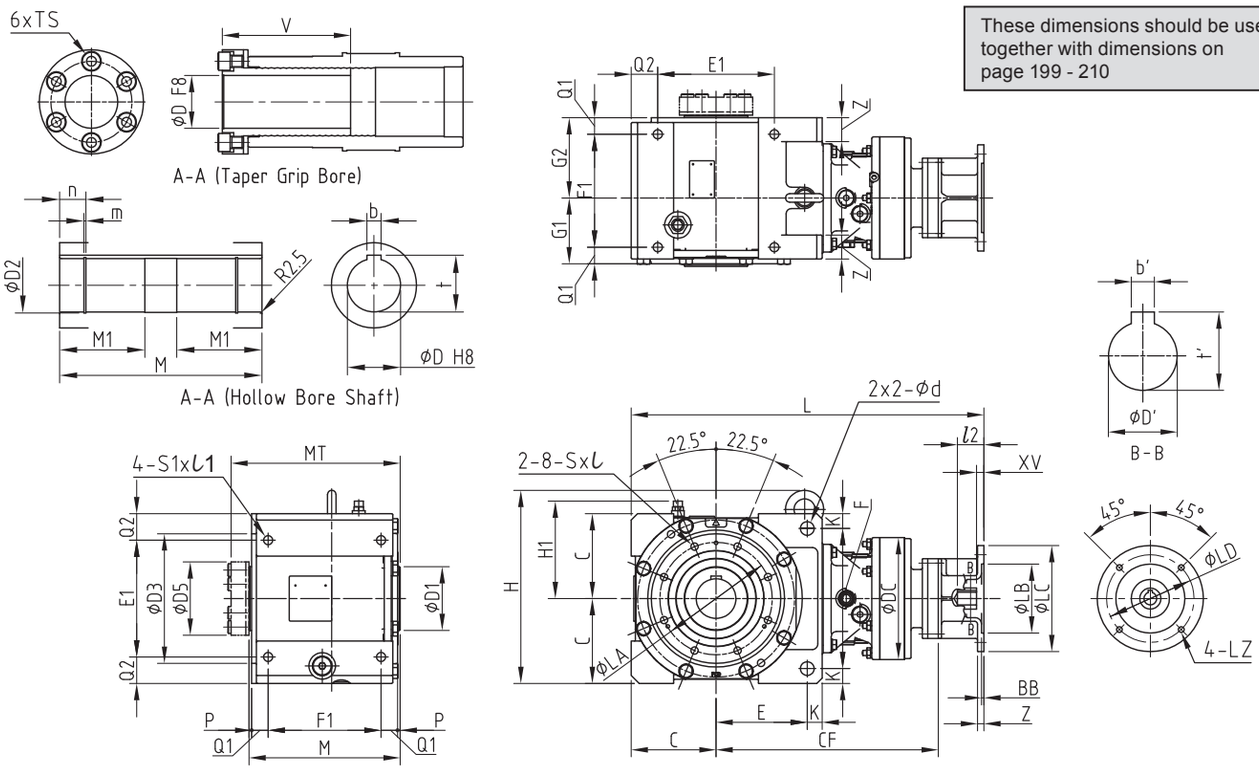

Size	IEC-Size	SSC	LC	LB	Z	BB	LZ	LD	XV	L	D'	b'	t'	V	l2	Weight (kg)
4E17DA	71/A160	V6B	160	110 H8	12	4.5	9	130	9	804	14 F7	5	16.3	30	200	320
	80/A200	V6C	200	130 H8	12	4.5	11	165	12	835	19 F7	6	21.8	40	200	323
	90/A200	V6D	200	130 H8	12	4.5	11	165	14	835	24 F7	8	27.3	53	200	323
	100/112/A250	V6E	250	180 H8	14	4.5	14	215	18	845	28 F7	8	31.3	60	200	325
4E17DB	71/A160	V6B	160	110 H8	12	4.5	9	130	9	823	14 F7	5	16.3	30	200	323
	80/A200	V6C	200	130 H8	12	4.5	11	165	12	849	19 F7	6	21.8	40	200	325
	90/A200	V6D	200	130 H8	12	4.5	11	165	14	849	24 F7	8	27.3	50	200	325
	100/112/A250	V6E	250	180 H8	14	4.5	14	215	18	859	28 F7	8	31.3	60	200	327
4E17DC	80/A200	V6C	200	130 H8	13	4.5	11	165	12	845	19 F7	6	21.8	40	200	329
	90/A200	V6D	200	130 H8	12	4.5	11	165	14	845	24 F7	8	27.3	50	200	329
	100/112/A250	V6E	250	180 H8	14	4.5	14	215	18	855	28 F7	8	31.3	60	200	333
	132/A300	V6F	300	230 H8	19	5	14	265	21	881	38 F7	10	41.3	82	200	335
4E18DA	71/A160	V6B	160	110 H8	11	4.5	9	130	9	896	14 F7	5	16.3	30	200	365
	80/A200	V6C	200	130 H8	12	4.5	11	165	12	922	19 F7	6	21.8	40	200	367
	90/A200	V6D	200	130 H8	12	4.5	11	165	14	922	24 F7	8	27.3	50	200	367
	100/112/A250	V6E	250	180 H8	14	4.5	14	215	18	932	28 F7	8	31.3	60	200	369
4E18DB	80/A200	V6C	200	130 H8	11	4.5	11	165	12	939	19 F7	6	21.8	40	200	395
	90/A200	V6D	200	130 H8	11	4.5	11	165	14	939	24 F7	8	27.3	50	200	395
	100/112/A250	V6E	250	180 H8	13	4.5	14	215	18	949	28 F7	8	31.3	60	200	397
	132/A300	V6F	300	230 H8	17	5	14	265	23	975	38 F7	10	41.3	80	200	402

Reducers X Adapters Dimension

Double Reduction

These dimensions should be used together with dimensions on page 199 - 210

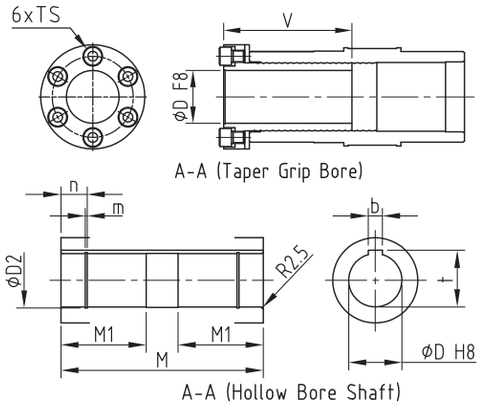

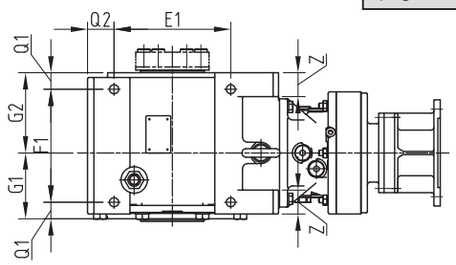

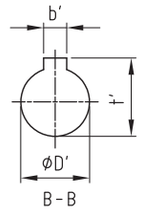

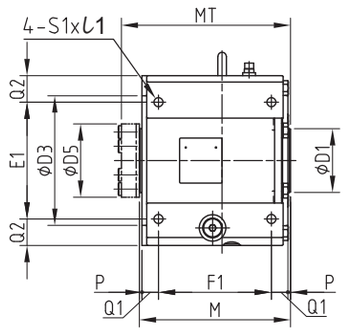

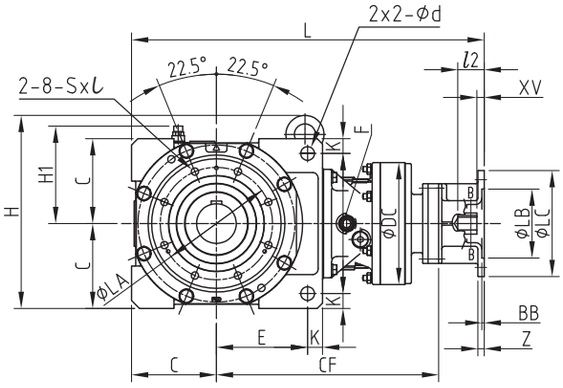

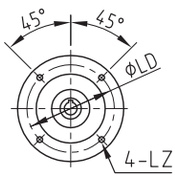

Size	IEC-Size	SSC	LC	LB	Z	BB	LZ	LD	XV	L	D'	b'	t'	V	l2	Weight (kg)
4F18DA	71/A160	V6B	160	110 H8	11	4.5	9	130	9	984	14 F7	5	16.3	30	248	541
	80/A200	V6C	200	130 H8	12	4.5	11	165	12	1010	19 F7	6	21.8	40	248	543
	90/A200	V6D	200	130 H8	12	4.5	11	165	14	1010	24 F7	8	27.3	50	248	543
	100/112/A250	V6E	250	180 H8	14	4.5	14	215	18	1020	28 F7	8	31.3	60	248	545
4F18DB	80/A200	V6C	200	130 H8	11	4.5	11	165	12	1027	19 F7	6	21.8	40	248	553
	90/A200	V6D	200	130 H8	11	4.5	11	165	14	1027	24 F7	8	27.3	50	248	553
	100/112/A250	V6E	250	180 H8	14	4.5	14	215	18	1037	28 F7	8	31.3	60	248	555
	132/A300	V6F	300	230 H8	17	5	14	265	23	1063	38 F7	10	41.3	80	248	560
4F19DA	71/A160	V6B	160	110 H8	12	4.5	9	130	9	1013	14 F7	5	16.3	30	248	587
	80/A200	V6C	200	130 H8	13	4.5	11	165	12	1036	19 F7	6	21.8	40	248	589
	90/A200	V6D	200	130 H8	13	4.5	11	165	14	1036	24 F7	8	27.3	50	248	589
	100/112/A250	V6E	250	180 H8	14	4.5	14	215	18	1046	28 F7	8	31.3	60	248	593
	132/A300	V6F	300	230 H8	17	5	14	265	23	1078	38 F7	10	41.3	80	248	595
4F19DB	80/A200	V6C	200	130 H8	11	4.5	11	165	12	1055	19 F7	6	21.8	40	248	591
	90/A200	V6D	200	130 H8	11	4.5	11	165	14	1055	24 F7	8	27.3	50	248	591
	100/112/A250	V6E	250	180 H8	13	4.5	14	215	18	1065	28 F7	8	31.3	60	248	594
	132/A300	V6F	300	230 H8	17	5	14	265	23	1091	38 F7	10	41.3	80	248	598

Reducers J Adapters Dimension

Single Reduction

These dimensions should be used together with dimensions on page 199 - 210

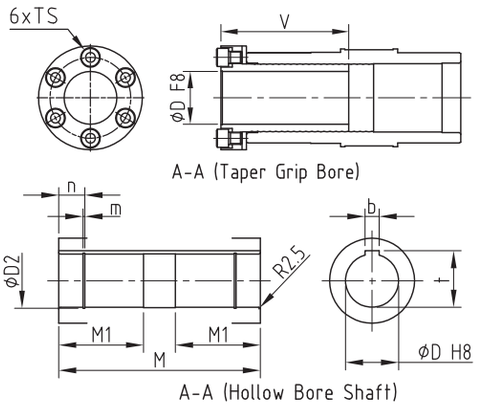

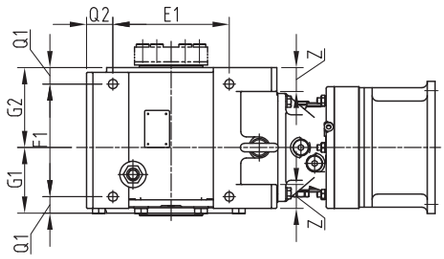

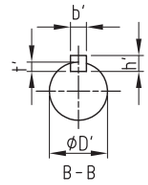

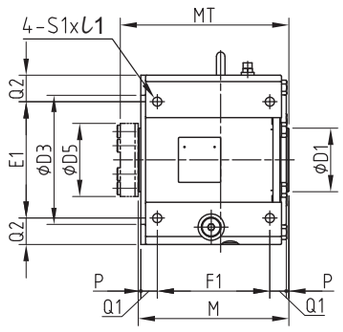

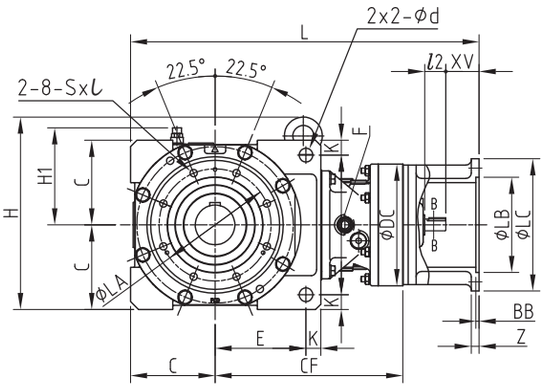

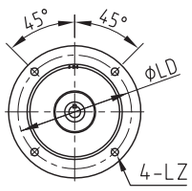

Size	IEC-Size	SSC	LC	LB	Z	BB	LZ	LD	XV	L	D'	b'	h'	t'	l2	V	Weight (kg)
4A10	71/A160	V6B	160	110 H8	10	4	9	130	33	432	15 h6	5	5	3	25	130	50.4
	80/A200	V6C	200	130 H8	10	10	11	165	43	442	15 h6	5	5	3	25	130	52
	90/A200	V6D	200	130 H8	10	5	11	165	53	452	15 h6	5	5	3	25	130	52
	100/112/A250	V6E	250	180 H8	16	6	14	215	63	462	15 h6	5	5	3	25	130	54.6
4A11	71/A160	V6B	160	110 H8	10	5	9	130	33	439	15 h6	5	5	3	25	130	56.7
	80/A200	V6C	200	130 H8	12	5	11	165	53	459	15 h6	5	5	3	25	130	57.9
	90/A200	V6D	200	130 H8	12	5	11	165	53	459	15 h6	5	5	3	25	130	57.9
	100/112/A250	V6E	250	180 H8	16	6	14	215	63	469	15 h6	5	5	3	25	130	60.1
4A12	71/A160	V6B	160	110 H8	10	-	M8	130	33	460	18 h6	6	6	3.5	35	130	60.8
	80/A200	V6C	200	130 H8	12	5	11	165	53	480	18 h6	6	6	3.5	35	130	60.9
	90/A200	V6D	200	130 H8	12	5	11	165	53	480	18 h6	6	6	3.5	35	130	60.9
	100/112/A250	V6E	250	180 H8	15	6	14	215	63	490	18 h6	6	6	3.5	35	130	63.8
	132/A300	V6F	300	230 H8	20	6	14	265	83	510	18 h6	6	6	3.5	35	130	68
4A14	80/A200	V6C	200	130 H8	12	-	12	165	53	509	22 h6	6	6	3.5	40	130	70.5
	90/A200	V6D	200	130 H8	12	-	12	165	53	509	22 h6	6	6	3.5	40	130	70.5
	100/112/A250	V6E	250	180 H8	15	6	14	215	63	519	22 h6	6	6	3.5	40	130	71.4
	132/A300	V6F	300	230 H8	15	6	14	265	83	539	22 h6	6	6	3.5	40	130	73.7
	160,180/A350	V6G	350	250 H8	20	7	18	300	113	569	22 h6	6	6	3.5	40	130	81.9
4B12	71/A160	V6B	160	110 H8	10	-	M8	130	33	516	18 h6	6	6	3.5	35	145	89.8
	80/A200	V6C	200	130 H8	12	5	11	165	53	536	18 h6	6	6	3.5	35	145	89.9
	90/A200	V6D	200	130 H8	12	5	11	165	53	536	18 h6	6	6	3.5	35	145	89.9
	100/112/A250	V6E	250	180 H8	15	6	14	215	63	546	18 h6	6	6	3.5	35	145	92.8
	132/A300	V6F	300	230 H8	20	6	14	265	83	566	18 h6	6	6	3.5	35	145	97
4B14	80/A200	V6C	200	130 H8	12	-	12	165	53	562	22 h6	6	6	3.5	40	145	100.5
	90/A200	V6D	200	130 H8	12	-	12	165	53	562	22 h6	6	6	3.5	40	145	100.5
	100/112/A250	V6E	250	180 H8	15	6	14	215	63	572	22 h6	6	6	3.5	40	145	101.4
	132/A300	V6F	300	230 H8	15	6	14	265	83	592	22 h6	6	6	3.5	40	145	103.7
	160,180/A350	V6G	350	250 H8	20	7	18	300	113	622	22 h6	6	6	3.5	40	145	111.9
4B16	90/A200	V6D	200	130 H8	12	-	M10	165	68	629	30 h6	8	7	4	45	145	135.1
	100/112/A250	V6E	250	180 H8	15	6	14	215	63	624	30 h6	8	7	4	45	145	131.4
	132/A300	V6F	300	230 H8	15	6	14	265	83	644	30 h6	8	7	4	45	145	132.6
	160,180/A350	V6G	350	250 H8	20	7	18	300	113	674	30 h6	8	7	4	45	145	141.5
	200/A400	V6J	400	300 H8	20	7	18	350	114	675	30 h6	8	7	4	45	145	145.9
4C14	80/A200	V6C	200	130 H8	12	-	12	165	53	650	22 h6	6	6	3.5	40	170	147.5
	90/A200	V6D	200	130 H8	12	-	12	165	53	650	22 h6	6	6	3.5	40	170	147.5
	100/112/A250	V6E	250	180 H8	15	6	14	215	63	660	22 h6	6	6	3.5	40	170	148.4
	132/A300	V6F	300	230 H8	15	6	14	265	83	680	22 h6	6	6	3.5	40	170	150.7
	160,180/A350	V6G	350	250 H8	20	7	18	300	113	710	22 h6	6	6	3.5	40	170	158.9
4C16	90/A200	V6D	200	130 H8	12	-	M10	165	68	710	30 h6	8	7	4	45	170	181.1
	100/112/A250	V6E	250	180 H8	15	6	14	215	63	705	30 h6	8	7	4	45	170	177.4
	132/A300	V6F	300	230 H8	15	6	14	265	83	725	30 h6	8	7	4	45	170	178.6
	160,180/A350	V6G	350	250 H8	20	7	18	300	113	755	30 h6	8	7	4	45	170	187.5
	200/A400	V6J	400	300 H8	20	7	18	350	114	756	30 h6	8	7	4	45	170	191.9
4C17	100/112/A250	V6E	250	180 H8	15	6	14	215	63	741	35 h6	10	8	5	55	170	206.3
	132/A300	V6F	300	230 H8	15	6	14	265	83	761	35 h6	10	8	5	55	170	208
	160,180/A350	V6G	350	250 H8	20	7	18	300	113	791	35 h6	10	8	5	55	170	215.8
	200/A400	V6J	400	300 H8	16	7	18	350	114	792	35 h6	10	8	5	55	170	218.2

Reducers J Adapters Dimension

Single Reduction

These dimensions should be used together with dimensions on page 199 - 210

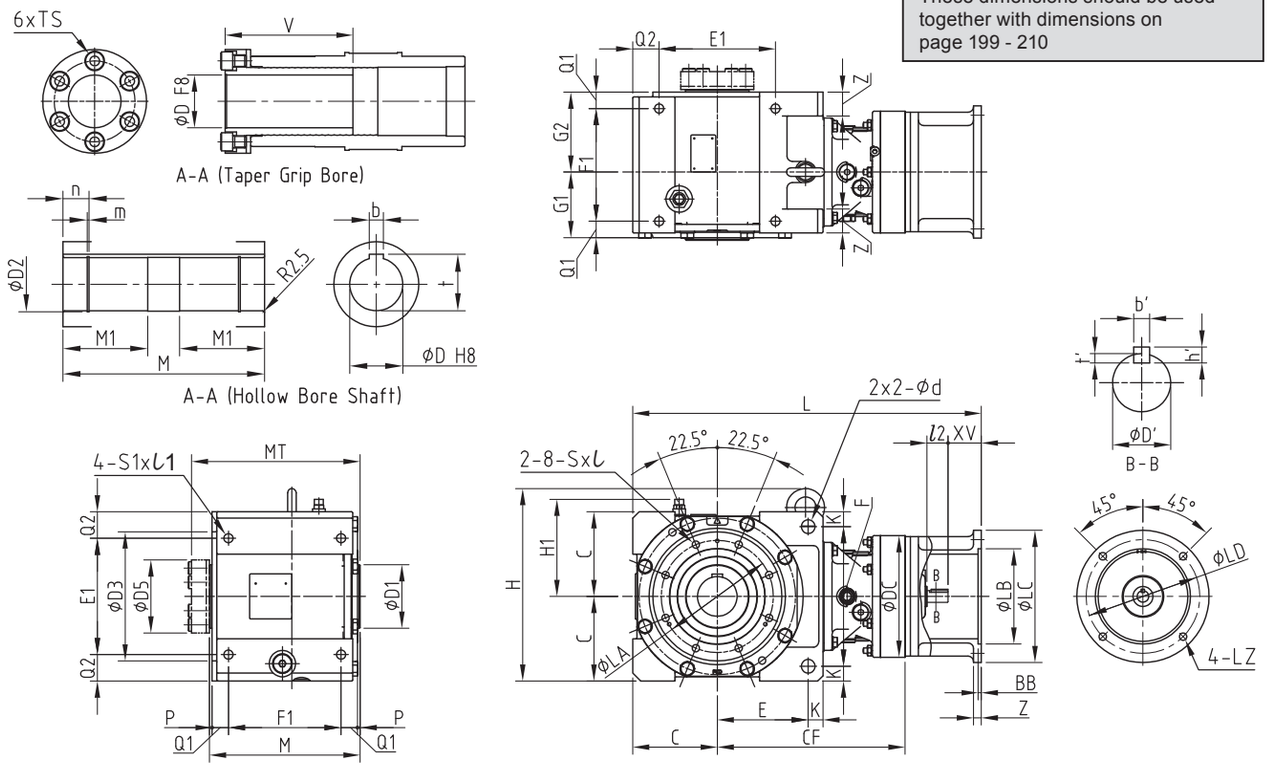

Size	IEC-Size	SSC	LC	LB	Z	BB	LZ	LD	XV	L	D'	b'	h'	t'	l2	V	Weight (kg)
4D16	90/A200	V6D	200	130 H8	12	-	M10	165	68	813	30 h6	8	7	4	45	199	248.1
	100/112/A250	V6E	250	180 H8	15	6	14	215	63	808	30 h6	8	7	4	45	199	244.4
	132/A300	V6F	300	230 H8	15	6	14	265	83	828	30 h6	8	7	4	45	199	245.6
	160,180/A350	V6G	350	250 H8	20	7	18	300	113	858	30 h6	8	7	4	45	199	254.5
	200/A400	V6J	400	300 H8	20	7	18	350	114	859	30 h6	8	7	4	45	199	258.9
4D17	100/112/A250	V6E	250	180 H8	15	6	14	215	63	821	35 h6	10	8	5	55	199	269.3
	132/A300	V6F	300	230 H8	15	6	14	265	83	841	35 h6	10	8	5	55	199	271
	160,180/A350	V6G	350	250 H8	20	7	18	300	113	871	35 h6	10	8	5	55	199	278.8
	200/A400	V6J	400	300 H8	16	7	18	350	114	872	35 h6	10	8	5	55	199	281.2
4D18	100/112/A250	V6E	250	180 H8	15	6	15	215	63	837	40 h6	12	8	5	65	199	284.5
	132/A300	V6F	300	230 H8	20	7	15	265	83	857	40 h6	12	8	5	65	199	288.1
	160,180/A350	V6G	350	250 H8	20	7	18	300	113	887	40 h6	12	8	5	65	199	291.9
	200/A400	V6J	400	300 H8	19	7	18	350	114	888	40 h6	12	8	5	65	199	297.9
	225/A450	V6K	450	350 H8	20	7	18*1	400	144	918	40 h6	12	8	5	65	199	306.2
4E17	100/112/A250	V6E	250	180 H8	15	6	14	215	63	871	35 h6	10	8	5	55	200	343.3
	132/A300	V6F	300	230 H8	15	6	14	265	83	891	35 h6	10	8	5	55	200	345
	160,180/A350	V6G	350	250 H8	20	7	18	300	113	921	35 h6	10	8	5	55	200	352.8
	200/A400	V6J	400	300 H8	16	7	18	350	114	922	35 h6	10	8	5	55	200	355.2
4E18	100/112/A250	V6E	250	180 H8	15	6	15	215	63	887	40 h6	12	8	5	65	199	367.5
	132/A300	V6F	300	230 H8	20	7	15	265	83	907	40 h6	12	8	5	65	199	371.1
	160,180/A350	V6G	350	250 H8	20	7	18	300	113	937	40 h6	12	8	5	65	199	374.4
	200/A400	V6J	400	300 H8	19	7	18	350	114	938	40 h6	12	8	5	65	199	380.4
	225/A450	V6K	450	350 H8	20	7	18*1	400	144	968	40 h6	12	8	5	65	199	388.7
4E19	100/112/A250	V6E	250	180 H8	16	6	M12	215	63	923	45 h6	14	9	5.5	70	199	407.9
	132/A300	V6F	300	230 H8	16	6	M12	265	83	943	45 h6	14	9	5.5	70	199	410.5
	160,180/A350	V6G	350	250 H8	20	7	18	300	113	973	45 h6	14	9	5.5	70	199	416.6
	200/A400	V6J	400	300 H8	20	7	18	350	114	974	45 h6	14	9	5.5	70	199	418.8
	225/A450	V6K	450	350 H8	20	7	18*1	400	144	1004	45 h6	14	9	5.5	70	199	421.6
	250/A550	V6L	500	400 H8	22	7	18*1	450	144	1004	45 h6	14	9	5.5	70	199	444.8
	280/A550	V6M	500	400 H8	22	7	18*1	450	144	1004	45 h6	14	9	5.5	70	199	444.8
4F18	100/112/A250	V6E	250	180 H8	15	6	15	215	63	976	40 h6	12	8	5	65	248	564.5
	132/A300	V6F	300	230 H8	20	7	15	265	83	996	40 h6	12	8	5	65	248	568.1
	160,180/A350	V6G	350	250 H8	20	7	18	300	113	1026	40 h6	12	8	5	65	248	571.4
	200/A400	V6J	400	300 H8	19	7	18	350	114	1027	40 h6	12	8	5	65	248	577.4
	225/A450	V6K	450	350 H8	20	7	18*1	400	144	1057	40 h6	12	8	5	65	248	585.7
4F19	100/112/A250	V6E	250	180 H8	16	6	M12	215	63	1010	45 h6	14	9	5.5	70	248	601.9
	132/A300	V6F	300	230 H8	16	6	M12	265	83	1030	45 h6	14	9	5.5	70	248	604.5
	160,180/A350	V6G	350	250 H8	20	7	18	300	113	1060	45 h6	14	9	5.5	70	248	610.6
	200/A400	V6J	400	300 H8	20	7	18	350	114	1061	45 h6	14	9	5.5	70	248	612.8
	225/A450	V6K	450	350 H8	20	7	18*1	400	144	1091	45 h6	14	9	5.5	70	248	615.6
	250/A550	V6L	500	400 H8	22	7	18*1	450	144	1091	45 h6	14	9	5.5	70	248	638.8
	280/A550	V6M	500	400 H8	22	7	18*1	450	144	1091	45 h6	14	9	5.5	70	248	638.8

Reducers J Adapters Dimension

Double Reduction

These dimensions should be used together with dimensions on page 199 - 210

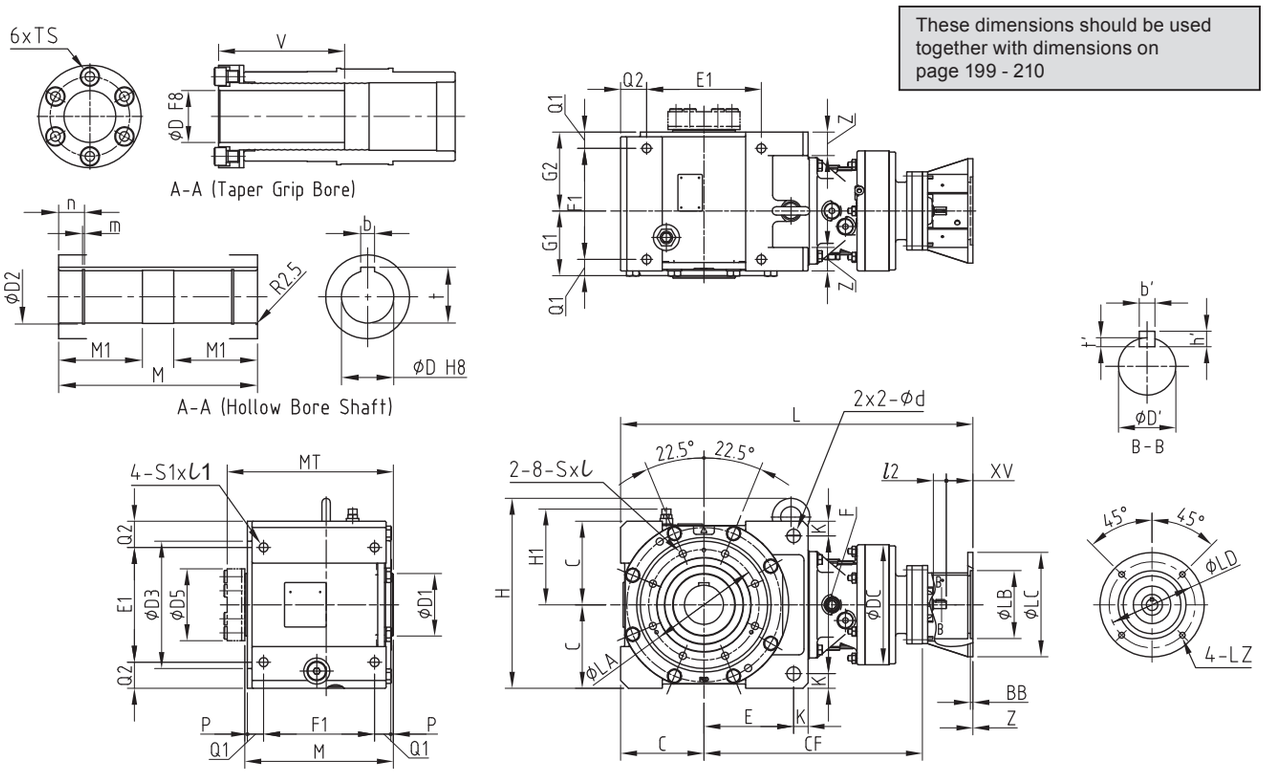

Size	IEC-Size	SSC	LC	LB	Z	BB	LZ	LD	XV	L	D'	b'	h'	t'	l2	V	Weight (kg)
4A10DA	71/A160	V6B	160	110 H8	10	5	9	130	44	492	12 h6	4	4	2.5	25	130	52.2
4A12DA	71/A160	V6B	160	110 H8	10	5	9	130	44	504	12 h6	4	4	2.5	25	130	60.2
4A12DB	71/A160	V6B	160	110 H8	10	5	9	130	46	525	12 h6	4	4	2.5	25	130	63.7
	80/A200	V6C	200	130 H8	10	5	11	165	43	522	12 h6	4	4	2.5	25	130	65.9
	90/A200	V6D	200	130 H8	12	5	12	165	53	532	12 h6	4	4	2.5	25	130	65.4
4B12DA	71/A160	V6B	160	110 H8	10	5	9	130	44	561	12 h6	4	4	2.5	25	145	89.2
4B12DB	71/A160	V6B	160	110 H8	10	5	9	130	46	582	12 h6	4	4	2.5	25	145	92.7
	80/A200	V6C	200	130 H8	10	5	11	165	43	579	12 h6	4	4	2.5	25	145	94.9
	90/A200	V6D	200	130 H8	12	5	12	165	53	589	12 h6	4	4	2.5	25	145	94.4
4B14DA	71/A160	V6B	160	110 H8	11	4.5	9	130	44	578	12 h6	4	4	2.5	25	145	92.2
4B14DB	71/A160	V6B	160	110 H8	12	4.5	9	130	46	596	12 h6	4	4	2.5	25	145	96.7
	80/A200	V6C	200	130 H8	12	4.5	11	165	43	593	12 h6	4	4	2.5	25	145	98.9
	90/A200	V6D	200	130 H8	12	4.5	11	165	53	603	12 h6	4	4	2.5	25	145	98.4
4C14DA	71/A160	V6B	160	110 H8	11	4.5	9	130	44	667	12 h6	4	4	2.5	25	170	139.2
4C14DB	71/A160	V6B	160	110 H8	12	4.5	9	130	46	685	12 h6	4	4	2.5	25	170	143.7
	80/A200	V6C	200	130 H8	12	4.5	11	165	43	682	12 h6	4	4	2.5	25	170	145.9
	90/A200	V6D	200	130 H8	12	4.5	11	165	53	692	12 h6	4	4	2.5	25	170	145.4
4C14DC	71/A160	V6B	160	110 H8	10	4	M8	130	33	678	15 h6	5	5	3	25	170	144.4
	80/A200	V6C	160	110 H8	10	5	11	130	57	702	15 h6	5	5	3	25	170	145.5
	90/A200	V6D	200	130 H8	10	4	11	165	53	698	15 h6	5	5	3	25	170	146
	100/112/A250	V6E	200	130 H8	16	6	14	165	63	708	15 h6	5	5	3	25	170	148.6
4C16DA	71/A160	V6B	160	110 H8	10	5	9	130	46	708	12 h6	4	4	2.5	25	145	166.7
	80/A200	V6C	200	130 H8	10	5	11	165	43	705	12 h6	4	4	2.5	25	145	168.9
	90/A200	V6D	200	130 H8	12	5	12	165	53	715	12 h6	4	4	2.5	25	145	168.4

Reducers J Adapters Dimension

Double Reduction

These dimensions should be used together with dimensions on page 199 - 210

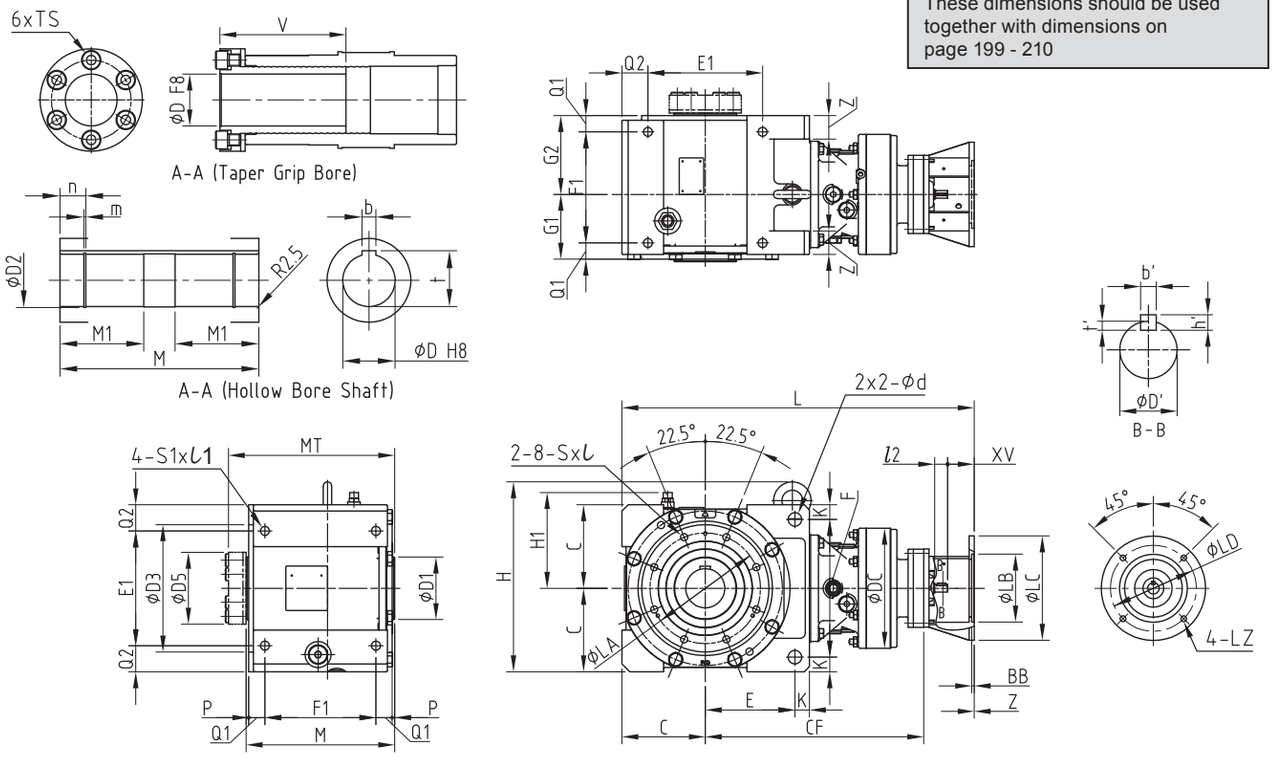

Size	IEC-Size	SSC	LC	LB	Z	BB	LZ	LD	XV	L	D'	b'	h'	t'	l2	V	Weight (kg)
4D16DA	71/A160	V6B	160	110 H8	10	5	9	130	46	810	12 h6	4	4	2.5	25	199	233.7
	80/A200	V6C	200	130 H8	10	5	11	165	43	807	12 h6	4	4	2.5	25	199	235.9
	90/A200	V6D	200	130 H8	12	5	12	165	53	817	12 h6	4	4	2.5	25	199	235.4
4D16DB	71/A160	V6B	160	110 H8	10	4	M8	130	33	803	15 h6	5	5	3	25	170	235.4
	80/A200	V6C	160	110 H8	10	5	11	130	57	827	15 h6	5	5	3	25	170	236.5
	90/A200	V6D	200	130 H8	10	4	11	165	53	823	15 h6	5	5	3	25	170	237
	100/112/A250	V6E	200	130 H8	16	6	14	165	63	833	15 h6	5	5	3	25	170	239.6
4D17DA	71/A160	V6B	160	110 H8	10	5	10	130	33	792	12 h6	4	4	2.5	25	199	247.9
	80/A200	V6C	200	130 H8	10	5	11	165	43	802	12 h6	4	4	2.5	25	199	249.9
	90/A200	V6D	200	130 H8	12	5	12	165	53	812	12 h6	4	4	2.5	25	199	249.4
4D17DB	71/A160	V6B	160	110 H8	10	4	M8	130	33	798	15 h6	5	5	3	25	199	249.4
	80/A200	V6C	160	110 H8	10	-	11	130	43	808	15 h6	5	5	3	25	199	250.6
	90/A200	V6D	200	130 H8	10	5	11	165	51	816	15 h6	5	5	3	25	199	251
	100/112/A250	V6E	200	130 H8	16	6	14	165	63	828	15 h6	5	5	3	25	199	253.6
4D17DC	71/A160	V6B	160	110 H8	10	10	M8	130	35	825	18 h6	6	6	3.5	35	199	256.8
	80/A200	V6C	200	130 H8	10	5	M10	165	45	835	18 h6	6	6	3.5	35	199	256.7
	90/A200	V6D	200	130 H8	10	5	11	165	55	845	18 h6	6	6	3.5	35	199	256.9
	100/112/A250	V6E	250	180 H8	15	6	14	215	65	855	18 h6	6	6	3.5	35	199	259.7
	132/A300	V6F	300	230 H8	20	6	14	265	85	875	18 h6	6	6	3.5	35	199	263.9
4D18DA	71/A160	V6B	160	110 H8	10	4	M8	130	33	871	15 h6	5	5	3	25	199	290.4
	80/A200	V6C	200	110 H8	10	10	11	130	43	881	15 h6	5	5	3	25	199	291.7
	90/A200	V6D	200	130 H8	10	5	11	165	53	891	15 h6	5	5	3	25	199	292
	100/112/A250	V6E	250	130 H8	16	6	14	165	63	901	15 h6	5	5	3	25	199	294.6
4D18DB	80/A200	V6C	200	130 H8	12	-	12	165	53	942	22 h6	6	6	3.5	40	199	305.1
	90/A200	V6D	200	130 H8	12	-	12	165	53	942	22 h6	6	6	3.5	40	199	305.1
	100/112/A250	V6E	250	180 H8	15	6	14	215	63	952	22 h6	6	6	3.5	40	199	307.4
	132/A300	V6F	300	230 H8	15	6	14	265	83	972	22 h6	6	6	3.5	40	199	309.7
4E17DA	71/A160	V6B	160	110 H8	10	5	10	130	33	842	15 h6	5	5	3	25	200	321.9
	80/A200	V6C	200	130 H8	10	5	11	165	43	852	15 h6	5	5	3	25	200	323.4
	90/A200	V6D	200	130 H8	12	5	12	165	53	862	15 h6	5	5	3	25	200	323.9
4E17DB	71/A160	V6B	160	110 H8	10	4	M8	130	33	848	15 h6	5	5	3	25	200	323.4
	80/A200	V6C	200	130 H8	10	-	11	165	43	858	15 h6	5	5	3	25	200	324.6
	90/A200	V6D	200	130 H8	10	5	11	165	51	866	15 h6	5	5	3	25	200	325
	100/112/A250	V6E	250	180 H8	16	6	14	165	63	878	15 h6	5	5	3	25	200	327.6
4E17DC	80/A200	V6C	200	130 H8	12	5	11	165	53	893	18 h6	6	6	3.5	35	200	330.7
	90/A200	V6D	200	130 H8	12	5	11	165	53	893	18 h6	6	6	3.5	35	200	330.7
	100/112/A250	V6E	250	180 H8	15	6	14	215	63	903	18 h6	6	6	3.5	35	200	333.7
	132/A300	V6F	300	230 H8	20	6	14	265	85	925	18 h6	6	6	3.5	35	200	337.9
4E18DA	71/A160	V6B	160	110 H8	10	4	M8	130	33	921	15 h6	5	5	3	25	200	365.4
	80/A200	V6C	200	110 H8	10	10	11	130	43	931	15 h6	5	5	3	25	200	366.7
	90/A200	V6D	200	130 H8	10	5	11	165	53	941	15 h6	5	5	3	25	200	367
	100/112/A250	V6E	250	130 H8	16	6	14	165	63	951	15 h6	5	5	3	25	200	369.6

Reducers J Adapters Dimension

Double Reduction

These dimensions should be used together with dimensions on page 199 - 210

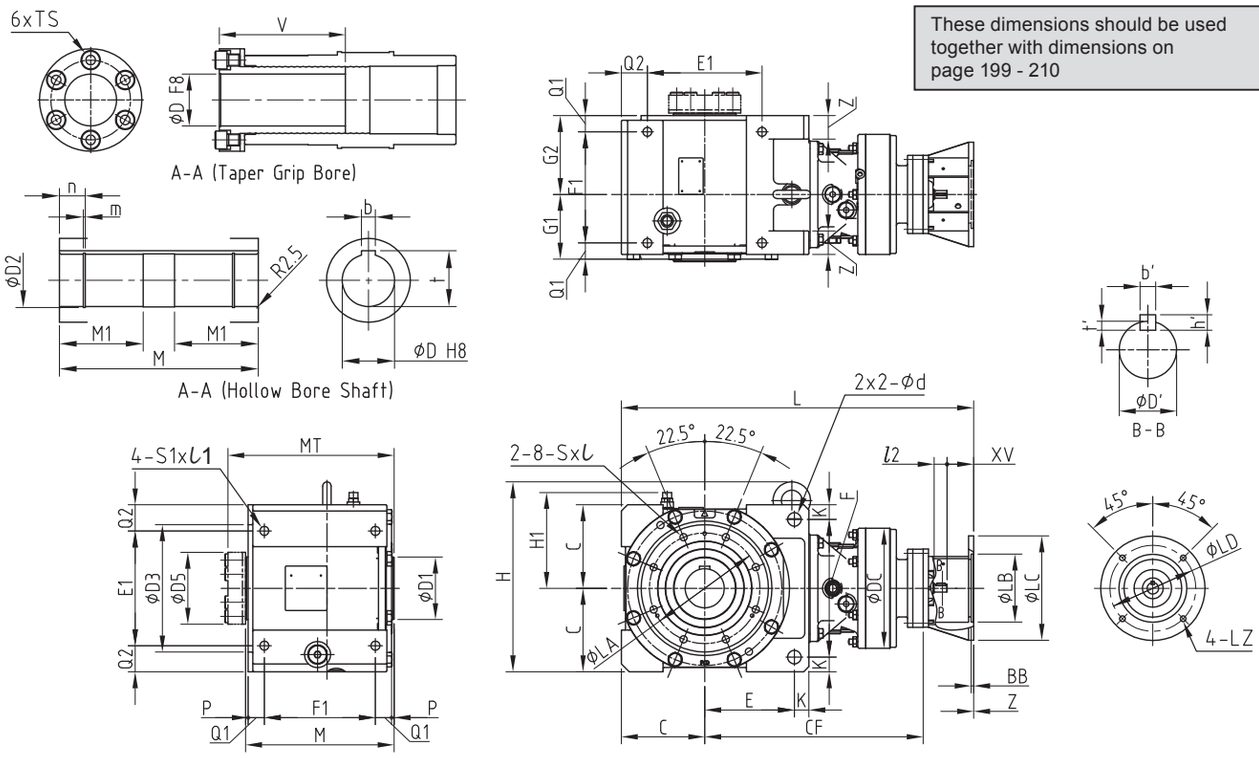

Size	IEC-Size	SSC	LC	LB	Z	BB	LZ	LD	XV	L	D'	b'	h'	t'	l2	V	Weight (kg)
4E18DB	80/A200	V6C	200	130 H8	12	-	12	165	53	992	22 h6	6	6	3.5	40	200	380.1
	90/A200	V6D	200	130 H8	12	-	12	165	53	992	22 h6	6	6	3.5	40	200	380.1
	100/112/A250	V6E	250	180 H8	15	6	14	215	63	1002	22 h6	6	6	3.5	40	200	382.4
	132/A300	V6F	300	230 H8	15	6	14	265	83	1022	22 h6	6	6	3.5	40	200	384.7
4F18DA	71/A160	V6B	160	110 H8	10	4	M8	130	33	1009	15 h6	5	5	3	25	248	541.4
	80/A200	V6C	200	110 H8	10	10	11	130	43	1019	15 h6	5	5	3	25	248	542.7
	90/A200	V6D	200	130 H8	10	5	11	165	53	1029	15 h6	5	5	3	25	248	543
	100/112/A250	V6E	250	130 H8	16	6	14	165	63	1039	15 h6	5	5	3	25	248	545.6
4F18DB	80/A200	V6C	200	130 H8	12	-	12	165	53	1080	22 h6	6	6	3.5	40	248	556.1
	90/A200	V6D	200	130 H8	12	-	12	165	53	1080	22 h6	6	6	3.5	40	248	556.1
	100/112/A250	V6E	250	180 H8	15	6	14	215	63	1090	22 h6	6	6	3.5	40	248	558.4
	132/A300	V6F	300	230 H8	15	6	14	265	83	1110	22 h6	6	6	3.5	40	248	560.7
4F19DA	71/A160	V6B	160	110 H8	10	-	M8	130	33	1064	18 h6	6	6	3.5	35	248	590.9
	80/A200	V6C	200	130 H8	12	5	11	165	53	1084	18 h6	6	6	3.5	35	248	590.8
	90/A200	V6D	200	130 H8	12	5	11	165	53	1084	18 h6	6	6	3.5	35	248	590.8
	100/112/A250	V6E	250	180 H8	15	6	14	215	63	1094	18 h6	6	6	3.5	35	248	593.8
	132/A300	V6F	300	230 H8	20	6	14	265	83	1114	18 h6	6	6	3.5	35	248	598.1
4F19DB	80/A200	V6C	200	130 H8	12	-	12	165	53	1108	22 h6	6	6	3.5	40	248	594.1
	90/A200	V6D	200	130 H8	12	-	12	165	53	1108	22 h6	6	6	3.5	40	248	594.1
	100/112/A250	V6E	250	180 H8	15	6	14	215	63	1118	22 h6	6	6	3.5	40	248	596.4
	132/A300	V6F	300	230 H8	15	6	14	265	83	1138	22 h6	6	6	3.5	40	248	598.7

Technical Data and Options

	Page
Detailed Dimensions of Input Shaft End	223
Detailed Dimensions of Output Shaft End	224
Lubrication	225
Painting and Rustproofing Specifications	229
Handling Precautions: Solid Shaft Units	231
Handling Precautions: Hollow Shaft Units	232
Shrink Disc (Option)	235
Taper Grip Bush (Option)	237
Torque Arm	239
Nameplate	243
Construction Drawings	244
Motor Construction Drawing & Type	245
Motor Characteristics	246
Terminal Box Specifications	250
Motor Installation Notes	252
Motor Brakes	253
Brake Construction Drawings	258
Wiring Diagrams (Standard, IE2 and AF Motors)	261
Wiring Diagrams (Motor with Brake)	263
Notes on Inverter Driven Motors	267
Notes on Protection and Cooling Method	269
Global Voltage and Power Supply	270
Warranty Standard	271
Safety Precautions	272

Detailed Dimensions of Input Shaft End

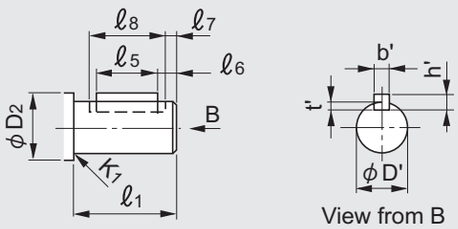

View from B

[Fig. 1]

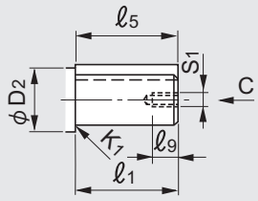

[Fig. 2]

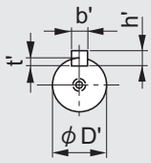

View from C

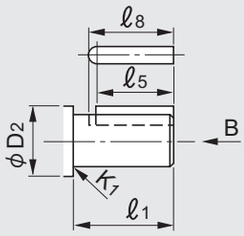

[Fig. 3]

- Input shaft D' dimensions: Dimension tolerance is in accordance with "h6" in JIS B0401-1976.
- Key: In accordance with the parallel key in JIS B 1301-1996.

Input Shaft End Dimensions

Frame Size	Fig.	D' (h6)	Tolerance	D2	ℓ1	K1 (Roundness)	t'	Tolerance	b' (key) (h9)	Tolerance	h' (key)	Tolerance	ℓ5 (key)	ℓ6	ℓ7	ℓ8	S1	ℓ9
4A10DA, 4A12DA, 4B12DA, 4B14DA 4C14DA	1	12	0 -0.011	17	25	0.5	2.5	+0.1 0	4	0 -0.030	4	0 -0.030	18	3	1	22	-	-
4A12DB, 4B12DB, 4B14DB, 4C14DB, 4C16DA 4D16DA, 4D17DA, 4E17DA	1	15		20	25	1	3		5		5		16	3.5		21	-	-
4A100, 4A105 4C14DC, 4D16DB, 4D17DB, 4D18DA, 4E17DB, 4E18DA, 4F18DA	1	15		20	25	1	3		5		5		16				-	-
4A110, 4A115	1	15		20	25	1	3		5		5		16	3.5	1		-	-
4A120, 4A125, 4B120, 4B125 4D17DC, 4E17DC, 4E19DA, 4F19DA	3	18		32	35	-	3.5		6		6		25	-	-	28	-	-
4D18DB, 4E18DB, 4E19DB, 4F18DB, 4F19DB	3	22	0 -0.013	38	40	-	3.5		6		6		32	-	-	35	-	-
4A140, 4A145, 4B140, 4B145 4C140, 4C145,	3	22		38	40	-	3.5		6		6		32	-	-	35	-	-
4B160, 4B165, 4C160, 4C165 4D160, 4D165	2	30		70	45	-	4	+0.2 0	8	0 -0.036	7	0 -0.090	45	-	-	-	M10	20
4C170, 4C175, 4D170, 4D175 4E170, 4E175	3	35	0 -0.016	70	55	-	5		10		8		50	-	-	-	M12	25
4D180, 4D185, 4E180, 4E185 4F180, 4F185	3	40		70	65	-	5		12	0 -0.043	8		63	-	-	-	M16	30
4E190, 4E195, 4F190, 4F195	3	45		82	70	-	5.5		14		9		70	-	-	-	M16	30

Detailed Dimensions of Output Shaft End

Output Shaft Details

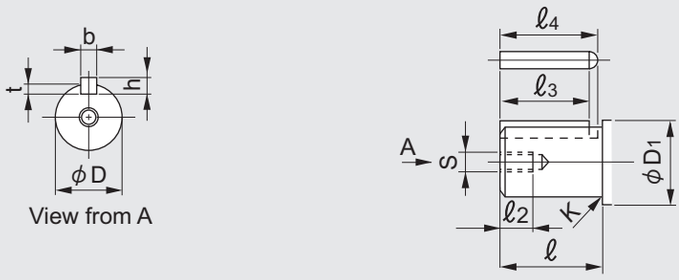

Output Shaft End Dimensions

Frame Size	D (h6)	Tolerance	D1	ℓ	K (Roundness)	s	ℓ2	t	Tolerance	b (key) (h9)	Tolerance	h (key)	Tolerance	ℓ3 (key)	ℓ4
4A10 □ 4A11 □ 4A12 □ 4A14 □	50	0 -0.016	85	90	R3	M10	20	5.5	+0.2 0	14	0 -0.043	9	0 -0.090	70	77
4B12 □ 4B14 □ 4B16 □	65	0 -0.019	100	115	R3	M12	24	7		18		11	0 -0.110	80	89
4C14 □ 4C16 □ 4C17 □	80		120	145	R5	M12	24	9		22	0 -0.052	14		120	131
4D16 □ 4D17 □ 4D18 □	95	0 -0.022	140	170	R5	M20	40	9		25		14		140	152.5
4E17 □ 4E18 □ 4E19 □	110		160	200	R5	M20	40	10		28		16		160	174
4F18 □ 4F19 □	130		180	210	R5	M20	45	11		32	0 -0.062	18		170	186

Notes: 1. The □ mark of each frame size contains 0, 5, DA, DB, or DC.
2. The above values are subject to change without notice.

Lubrication

1. Standard Lubrication Method

Standard Lubrication Method Table

Frame Size	Cyclo or Planetary Single Stage Reduction		4A10 □	4A11 □	4A12 □ 4B12 □	4A14 □ 4B14 □ 4C14 □	4B16 □ 4C16 □ 4D16 □	4C17 □ 4D17 □ 4E17 □	4D18 □ 4E18 □ 4F18 □	4E19 □ 4F19 □
	Cyclo Two-Stage Reduction		4A10DA	-	4A12DA 4A12DB 4B12DA 4B12DB	4B14DA 4B14DB 4C14DA 4C14DB 4C14DC	4C16DA 4C16DB 4D16DA 4D16DB	4D17DB 4D17DC 4E17DA 4E17DB 4E17DC	4D18DA 4D18DB 4E18DA 4E18DB 4F18DA 4F18DB	4F19DA 4F19DB
Output Side (Bevel)			Oil bath							
Input Side (Cyclo or Planetary)	Motor Horizontal		Oil bath							
	Motor Vertical	Output end at bottom	Oil bath							
		Output end at top	Grease lubrication							

Notes: 1. The above lubrication method is used when Bevel BUDDYBOX® reducers are driven at a standard input speed.
2. Grease lubrication may be available also for reducer models where oil lubrication is the standard method. When it is available, the performance and other characteristics may differ from the standard. Consult us for details.
3. The □ mark of each frame size represents 0 or 5, depending on the combination with the reduction ratio.

2. Lubricants

A. Oil Lubrication Models

The oil lubrication models are shipped without oil. Be sure to fill lubrication oil up to the center of the oil gauge before starting operation.

Table 1: Recommended Lubricants (Equivalent to SP Type Industrial Extreme-Pressure Gear Oil or JIS K2219 No.2 Industrial Gear Oil)

Ambient temperature °C	Gulf Oil	Esso Oil	Mobil Oil	Shell Oil	Caltex Oil	BP Oil
-10°C to 5°C	EP Lubricant HD 68	Spartan EP 68	Mobil gear 600XP 68	Omala S2 G 68		Energol GR-XP 68
0°C to 35°C	EP Lubricant HD 100 HD 150	Spartan EP 100 EP 150	Mobil gear 600XP 100, 150	Omala S2 G 100, 150	Meropa 100, 150	Energol GR-XP 100 GR-XP 150
30°C to 50°C	EP Lubricant HD 220 HD 320 HD 460	Spartan EP 220 EP 320 EP 460	Mobil gear 600XP 200~460	Omala S2 G 220, 320, 460	Meropa 220, 320, 460	Energol GR-XP 220 GR-XP 320 GR-XP 460

Notes: 1. If the reducer is used in winter or at a relatively low temperature, use oil of the lower viscosity within a cell of the table.
2. Consult us if the reducer is used at an ambient temperature other than the 0 to 40°C range.
3. The lubricant should be changed periodically according to the instructions in the operation and maintenance manual and the oil change interval.

B. Grease Lubrication Models (Mounting Position: Y4, F4, G4, K4, and W4)

The grease lubrication model is shipped after the appropriate portions have been filled with the grease in Table 2. You only need to fill with oil lubrication in the oil lubrication portions before starting operations.

Table 2: Standard Greases

Ambient Temperature °C	Nominal Reduction Ratio	Frame Size	
		i) 4A10 □, 4A11 □, 4A12 □, 4B12 □,	ii) 4A14 □, 4B14 □, 4B16 □, 4C14 □, 4C16 □, 4C17 □, 4D16 □, 4D17 □, 4E17 □, 4D18 □, 4E18 □, 4E19 □, 4F18 □, 4F19 □,
-10~50	11~18	Shell Oil Shell Alvania EP Grease R0	
	21~	Nippon Koyu BEN10-No.2	Cosmo Oil Cosmo Grease DYNAMAX SH No.2

The □ mark of each frame size represents 0, 5, DA, DB, or DC

- ●Do not use grease not listed in Table 2.
- ●Consult us if above grease is not available.

Model	Ambient temperature °C	Model/Part	Company	Brand
Sumitomo Motor	-10~50	Sealed Bearings	Kyodo Yushi	MULTEMP SRL

* Consult us if the unit is stored for a long period beyond three years because grease maintenance may be necessary.

Lubrication

3. Oil Fill Quantities

- The approximate oil fill quantities are listed in table below.
- Be sure to check the oil level with the oil gauge.

Approximate oil fill quantities for Bevel BUDDYBOX® (liters)

[Single Stage Type] Output side: Bevel; input side: Cyclo or planetary;
G: Grease lubrication (For the amount of grease, refer to the operation and maintenance manual.)

Frame Size	Mounting Position						
	Y1, F1, G1, K1, V1	Y2, F2, G2, K2, V2, W2	Y3, F3, G3, K3, V3, W3	Y4, F4, G4, K4, W4		Y5, F5, G5, K5, V5	Y6, F6, G6, K6, V6
				Output Side	Input Side		
4A10 □	1.6	3.2	1.6	1.1	G	1.4	1.8
4A11 □	1.7	3.3	1.7			1.4	1.9
4A12 □	1.7	3.4	1.7			1.5	1.9
4A14 □	1.9	3.8	1.9			1.7	2.1
4B12 □	3.3	6.5	3.3	1.7	G	3.3	3.2
4B14 □	3.5	7.0	3.5			3.5	3.4
4B16 □	3.9	7.6	3.9			4.0	3.9
4C14 □	5.5	11.1	5.5	2.7	G	5.3	5.9
4C16 □	6.0	11.8	6.0			5.7	6.3
4C17 □	6.3	12.5	6.3			6.1	6.7
4D16 □	10.1	19.9	10.1	4.6	G	9.7	10.4
4D17 □	10.4	20.5	10.4			10.0	10.8
4D18 □	10.7	21.0	10.7			10.3	11.1
4E17 □	14.6	28.8	14.6	6.3	G	13.1	16.1
4E18 □	14.7	29.1	14.7			13.2	16.2
4E19 □	15.7	30.4	15.7			14.2	17.2
4F18 □	20.0	39.4	20.0	7.3	G	18.5	21.4
4F19 □	20.8	40.6	20.8			19.3	22.2

The □ mark of each frame size represents 0 or 5.

[Double Stage Type] Output side: Bevel; input side: Cyclo
G: Grease lubrication (For the amount of grease, refer to the operation and maintenance manual.)

Frame Size	Mounting Position						
	Y1, F1, G1, K1, V1	Y2, F2, G2, K2, V2, W2	Y3, F3, G3, K3, V3, W3	Y4, F4, G4, K4, W4		Y5, F5, G5, K5, V5	Y6, F6, G6, K6, V6
				Output Side	Input Side		
4A10DA	1.7	3.2	1.7	1.1	G	1.4	1.9
4A12DA	1.7	3.4	1.7			1.5	2.0
4A12DB	1.8	3.4	1.8			1.5	2.0
4B12DA	3.3	6.5	3.3	1.7	G	3.4	3.3
4B12DB	3.4	6.6	3.4			3.4	3.3
4B14DA	3.5	7.0	3.5			3.6	3.5
4B14DB	3.6	7.0	3.6			3.6	3.5
4C14DA	5.6	11.2	5.6	2.7	G	5.3	5.9
4C14DB	5.6	11.2	5.6			5.4	5.9
4C14DC	5.6	11.3	5.6			5.4	6.0
4C16DA	6.0	11.8	6.0			5.8	6.4
4C16DB	6.1	11.9	6.1			5.9	6.4
4D16DA	10.1	20.0	10.1	4.6	G	9.8	10.5
4D16DB	10.1	20.0	10.1			9.8	10.5
4C17DA	10.2	20.0	10.2			9.8	10.6
4D17DB	10.5	20.6	10.5			10.2	10.9
4D17DC	10.7	20.7	10.7			10.3	11.0
4D18DA	10.8	21.1	10.8			10.5	11.2
4D18DB	11.7	21.4	11.7			11.4	12.1
4E17DA	14.6	28.8	14.6	6.3	G	13.1	16.1
4E17DB	14.7	28.9	14.7			13.2	16.2
4E17DC	14.8	29.0	14.8			13.3	16.3
4E18DA	14.8	29.3	14.8			13.3	16.3
4E18DB	15.7	29.6	15.7			14.2	17.2
4E19DA	17.5	31.0	17.5			16.0	19.0
4E19DB	17.7	31.0	17.7			16.2	19.2
4F18DA	20.1	39.6	20.1	7.3	G	18.6	21.5
4F18DB	21.0	39.9	21.0			19.5	22.4
4F19DA	22.6	41.2	22.6			21.1	24.0
4F19DB	22.8	41.2	22.8			21.3	24.2

4. Precautions on Oil Seal

Oil seals have their lifetime. While it is used for many hours, the sealing effect may degrade due to natural degradation or abrasion. The seal lifetime varies significantly with the operation conditions and ambient conditions of the reducer. If it is used in a usual operation manner (uniform load, operated for 10 hours a day, at a normal temperature), it is recommended to replace oil seals every 1 to 3 years or so. If rust is found on the shaft (or collar), replace it as well.

5. Oil Gauge Options

The oil gauge is equipped, as standard, on the side of the case. You may designate its mounting position and type of oil gauge optionally.

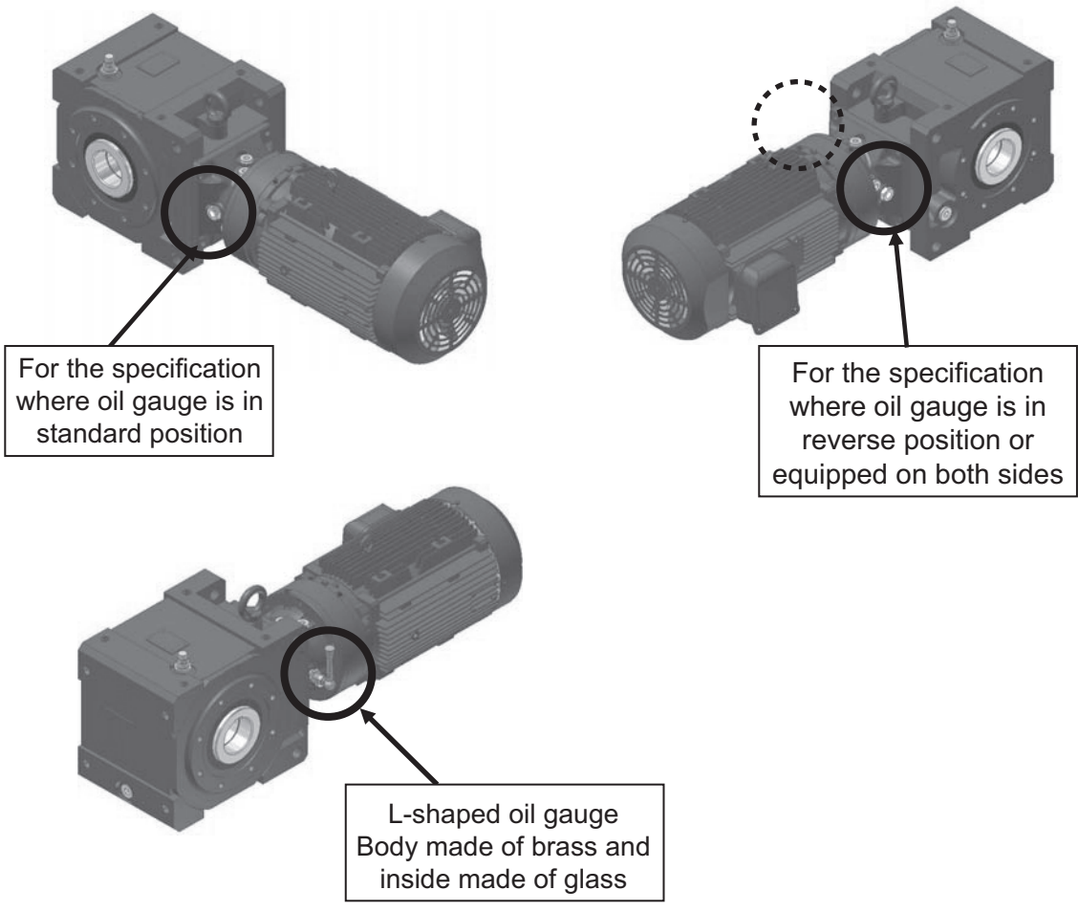

- Dip stick type is also available. Consult us for details.

Painting and Rustproofing Specifications

1. Painting Specifications

Treatment	Types of Coatings: Classification	Types of Coatings: Paint of finish coat	Additional leadtime [days]	Coating Specifications: Type	Coating Specifications: Layers Total thickness [μm]	Coating Specifications: Quality	Applied Coating: Brand	Weather resistance	Submersible	Oil-proof	Acid resistance	Alkali resistance	Heat resistance [°C]	Application
Cast Iron: Class 1 Chaplet Steel plate: Class 2 Chaplet	Standard coating	-	0	Under coating	1 (Note 8) (0 ~ 40)	Modified alkyd resin	ACT PRIMER						100	Standard undercoat
		Acrylic modified phthalic	0	Finish coating	1 (15 ~ 30)	Acrylic modified alkyd resin	NEORON #2000	○	×	Δ	△	×	100	Standard undercoat
	Standard export coating	Acrylic modified phthalic	2	Under coating	2 (30 ~ 60)	Modified alkyd resin	ACT PRIMER	○	×	Δ	△	×	100	Models for export
				Finish coating	1 (15 ~ 30)	Acrylic modified alkyd resin	NEORON #2000							
	Optional coating (Apply UNIGROUND PTC Primer once as the primary primer)	Modified epoxy	6	Under coating	1 (20 ~ 40)	Vinyl modified alkyd resin	NEO-GOSE #500 Red lead primer	◎	>	○	△	△	100	Moderate corrosive atmosphere, sea side, outdoor humid atmosphere, and chemical plant area
				Finish coating	2 (30 ~ 60)	Acrylic modified alkyd resin	Acron #300							
		Long oil phthalic (synthetic resin type)	7	Under coating	2 (40 ~ 70)	Lead rust preventive paint	SD MARINE PRIMER (rust)	○	×	×	△	×	100	Vessel, boat, bridge, sea side, outdoor humid atmosphere
				Finish coating	2 (30 ~ 60)	Synthetic resin paint	PENFORTE #600							
		Chloride rubber	10	Under coating	2 (40 ~ 70)	Lead rust preventive paint	SD MARINE PRIMER (rust)	◎	Δ	Δ	○	○	80	Vessel, boat, bridge, sea side, outdoor humid atmosphere
				Second coating	1 (20 ~ 40)	Phenol M.I.O paint	SHINTO MIO							
				Finish coating	2 (40 ~ 70)	Chloride rubber paint	RUBBR #100							
		Phenol	7	Under coating	2 (40 ~ 70)	Lead rust preventive paint	SD MARINE PRIMER (rust)	○	×	Δ	○	△	100	Indoor and outdoor areas of acid treating plant or chemical plant
				Finish coating	2 (30 ~ 60)	Phenol resin enamel	NEW AKNON							
		Heat-proof silver	7	Under coating	1 (20 ~ 40)	Lead rust preventive paint	SD MARINE PRIMER (rust)	○	×	×	×	×	120	Heating furnace (120°C)
				Finish coating	1 (15 ~ 30)	Aluminum paint	SILVER TOP (heat resisting)							
	Extra rust-proof coating	Epoxy	10	Under coating	1 (50 ~ 60)	Special permeability epoxy aluminum paint	CARBOMASTIC #15	*	◎	◎	◎	◎	150	Chemical contact area, chemical plant, long-term anticorrosion plant
				Finish coating	3 (30 ~ 90)	Polyamide epoxy	NEO-GOSE #200	◎						
		Epoxy	10	Under coating	1 (50 ~ 60)	Special permeability epoxy aluminum paint	CARBOMASTIC #15	*	◎	◎	◎	◎	150	Nuclear power plant
				Finish coating	3 (120 ~ 240)	Polyamide epoxy	NEO-GOSE #2300 CW	◎						
		Polyurethane	10	Under coating	1 (50 ~ 60)	Special permeability epoxy aluminum paint	CARBOMASTIC #15	◎	◎	◎	◎	◎	150	Nuclear power plant
				Finish coating	3 (45 ~ 90)	Polyisocyanate urethane reducer paint	NY POLIN K finish coat							
Sand blast undercoating to be designated	Extra rust-proof coating	Thick film epoxy	12		5 (250 ~ 350)	Thick film type modified epoxy resin paint	NEO-GOSE #2300 NTHB	◎	◎	◎	◎	◎	100	Submersible equipment, marine structure

Notes:
1. "Additional leadtime" refers to the number of days required for special coating in addition to standard coating.
2. The Sumitomo's standard coating color is 6.5PB 3.6/6.2, or called "Donau Blue". For a special coating color, the coating specifications may differ from the standard specifications.
3. Any applied coating may be subject to replacement by its equivalent product.
4. Each asterisk (*) indicates that care should be taken because the coating may fade with sunlight.
5. Consult us if the ambient temperature may exceed the heat resistance temperature indicated above. (Any heat resistance temperature above is only for the coating, but not for the reducer.)
6. Consult us if the ambient temperature changes repeatedly between low and room temperatures in a short time.
7. The thick film epoxy system for extra anticorrosion coating has limited color selections. Consult us for coating other than N1.0 and 7.5GY6/2. (The Sumitomo's standard coating color, 6.5PB 3.6/6.2, may not be applied.)
8. Undercoating for the standard coating is omitted on some products.

◎ ◎ ○ △ : Appropriate
Δ : Caution necessary for selection
× : Inappropriate

Painting and Rustproofing Specifications

2. Surface Conditioning

Treatment	Surface condition after treatment	Methods	Reference standards	
			SSPC	SIS
Class 1 Near white blast cleaning	Surface completely free of mill scales, rust, corrosives, dirt, and other foreign substances. Embedded residues (mill scales, rust, slight smears, or discoloration of oxide substances) are acceptable. However, a minimum of 95% of the surface area should be visibly clean of any residues. Remaining surface may contain slight discolorations, such as stains.	Near White Blast Cleaning ○ Shot blast ○ Sand blast, etc.	SP-10	Sa-2 1/2
Class 2 Power tool cleaning	Surface free of loose mill scales, rust, corrosives, dirt, and other foreign substances. Embedded residues (mill scales, rust, slight smears, or discoloration of oxide substances) are acceptable. However, a minimum of two-thirds of the surface area should be visibly clean of any residues. Remaining surface may contain slight discolorations, such as stains, and residual rust, and coating peelings in pores, for surface with porous corrosion.	Commercial Blast Cleaning Power Tool Cleaning ○ Disk sander ○ Wire wheel ○ Grinder, etc.	SP-6 (SP-3)	Sa-2 (St-3)
Class 3 Hand tool cleaning	Surface free of loose scales, rust, coating, oil & grease, dirt, and other foreign substances, with slight metallic luster.	Hand Tool Cleaning ○ Wire brush ○ Scraper, etc.	SP-2	St-2

<Reference standards> SSPC Standards (U.S.A Steel Structual Painting Councils) SIS Standards (SWEEDEN,SVENSK Standard,S.I.S 055900)

Rustproof Treatment Standards

Sumitomo's complete products are shipped with the rustproof treatment below.

1. Standard Rustproof Specification

(1) External Rustproof

The products are shipped with rust proofing oil applied. Their rust proof conditions should be checked every six months after shipment. Reapply rustproof treatment if necessary.

(2) Internal Rustproof

Lubrication	Grease lubricated models	Oil lubricated models
Rustproof Period	1 year	6 months
Storage Requirements	Storage inside general shop or warehouse, with relatively low humidity, dust, extreme fluctuation, corrosive gas, or the like.	

2. Rustproof Specification for Export

Consult us if an item is required to be treated for export or more elaborately than the standard rustproof treatment. It will be subjected to an export rustproof treatment.

Handling Precautions: Solid Shaft Type

Seal Cap

For solid shaft type units,

(1) A seal cap is put on the opposite side of shaft projection direction for frame size A ~ E.

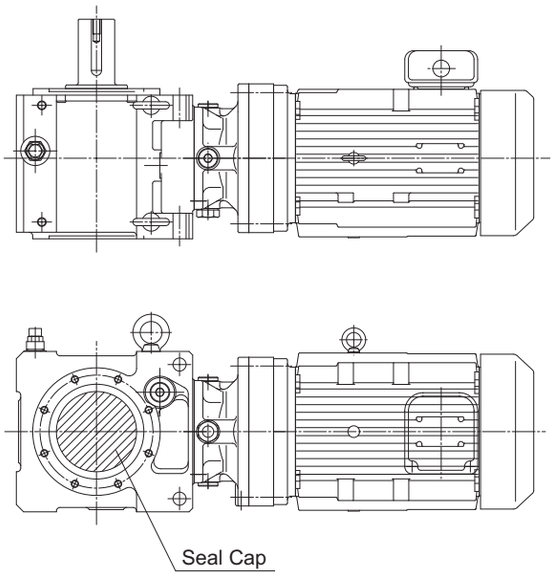

(2) A cover is put on the opposite side of shaft projection direction for frame size F.

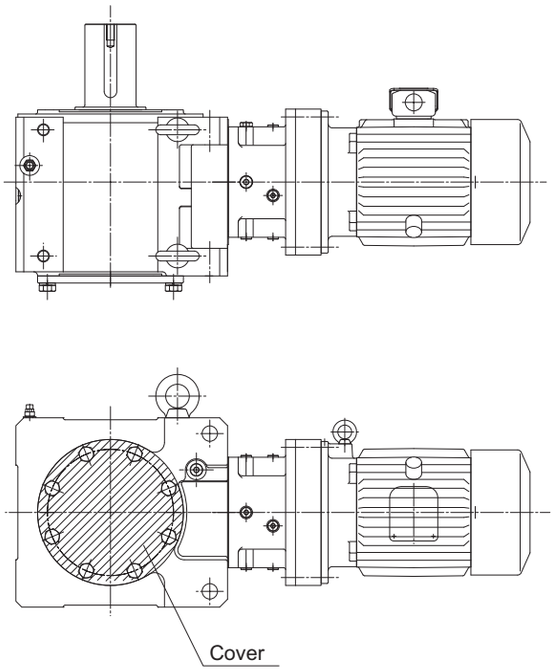

Handling Precautions: Hollow Shaft Type

Hollow Shaft Type Mounting

1. Mounting to Driven Shaft

- Apply molybdenum disulfide to the surface of the shaft and the inside of the hollow shaft. Then, insert BUDDYBOX onto the driven shaft.
- If engagement is too tight, lightly strike on the end of the hollow output shaft with a mallet. Never strike on the casing. It is recommended to make and use jigs a to e as shown on the right for smooth insertion.
- The hollow shaft dimension tolerance is in accordance with JIS "H8". The recommended tolerance for the driven shaft is as follows:
  For uniform load without shock load: JIS h6 or js6
  For shock load or large radial load: JIS js6 or k6
- Snap ring size is in accordance with JIS B2804C.
- If the driven shaft is stepped, check the shaft stress of driven shaft.

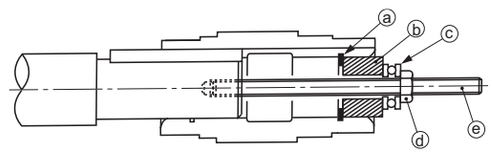

ⓐ Retaining ring ⓑ Spacer ⓒ Thrust bearing
ⓓ Nut ⓔ Flush cut bolt

2. Removal from Driven Shaft

Handle with care so that excessive force will not be applied between the casing and hollow shaft. It is recommended to make jigs f to i as shown on the right for easy removal.

Note: For use in mounting, securing, and removal, prepare the parts of the recommended dimensions below.

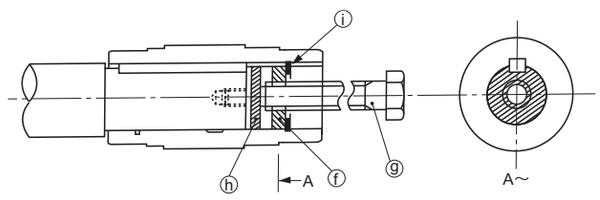

ⓕSpacer ⓖ Hex head bolt ⓗ Disc ⓘ Retaining ring

Recommended Dimensions of Mounting and Removal Jigs and Driven Shaft

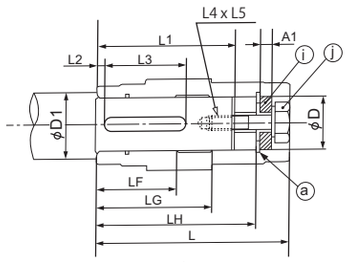

Fig. 1: Securing

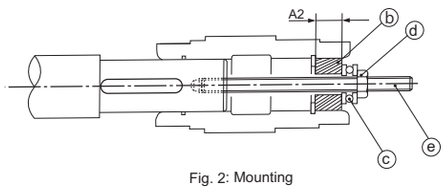

Fig. 2: Mounting

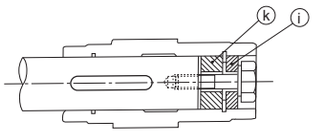

Fig. 3: Securing

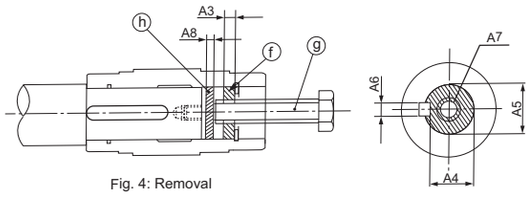

Fig. 4: Removal

Handling Precautions: Hollow Shaft Type

Recommended Dimensions of Driven Shaft and Jigs

Frame Size	Hollow Shaft (Bevel BUDDYBOX®)					Recommended Dimensions of Driven Shaft						Recommended Dimensions of Jigs														
												ⓐ	ⓑ	ⓒ	ⓓ	ⓔ	ⓕ						ⓖ	ⓗ	ⓘ	ⓙ	ⓚ
	ØD	L	LH	LG	LF	L1	L2	L3 (Minimum) (MIN)	L4	L5	ØD1	C type Retaining Ring in bore	A2	Thrust bearing	Nut	Double-end stud	A3	A4	A5	A6	A7	Hex head bolt (Full thread type)	A8	A1	Hex head bolt	Outside Dia. x Width
4A10 □ 4A11 □ 4A12 □ 4A14 □	Ø55	216	186	131	85	157	10	76	M16	32	Ø65	Ø55	25	51104	M16	M16x250	19	45	$55^{-0.1}_{-0.3}$	16	M24	M24x250	5	13	M16x80	Ø55x29
4B12 □ 4B14 □ 4B16 □	Ø65	259	229	159	100	204	12	115	M20	34	Ø75	Ø65	25	51105	M20	M20x300	19	58	$65^{-0.1}_{-0.3}$	18	M24	M24x300	5	13	M20x80	Ø65x25
4C14 □ 4C16 □ 4C17 □	Ø75	285	248	165	120	223	12	170	M20	39	Ø85	Ø75	25	51105	M20	M20x300	19	67.5	$75^{-0.1}_{-0.3}$	20	M24	M24x300	5	13	M20x80	Ø75x25
4D16 □ 4D17 □ 4D18 □	Ø85	340	303	195	145	272	15	215	M24	44	Ø95	Ø85	35	51107	M24	M24x400	24	77	$85^{-0.1}_{-0.3}$	25	M30	M30x400	6	15	M24x100	Ø85x31
4E17 □ 4E18 □ 4E19 □	Ø100	373	336	208	165	310	16	220	M24	48	Ø110	Ø100	35	51107	M24	M24x400	19	90	$100^{-0.1}_{-0.3}$	28	M30	M30x400	6	15	M24x100	Ø100x26
4F18 □ 4F19 □	Ø120	435	386	241	189	345	16	260	M30	60	Ø140	Ø120	46	51109	M30	M30x450	30	109	$120^{-0.1}_{-0.3}$	32	M36	M36x450	7	15	M30x110	Ø120x41

* The □ mark of each frame size represents 0, 5, DA, DB, or DC.

3. Securing to Driven Shaft

- For whirl stop by a torque arm, be sure to secure the reducer to the driven shaft.

a. Example of securing the reducer not to move to the machine side

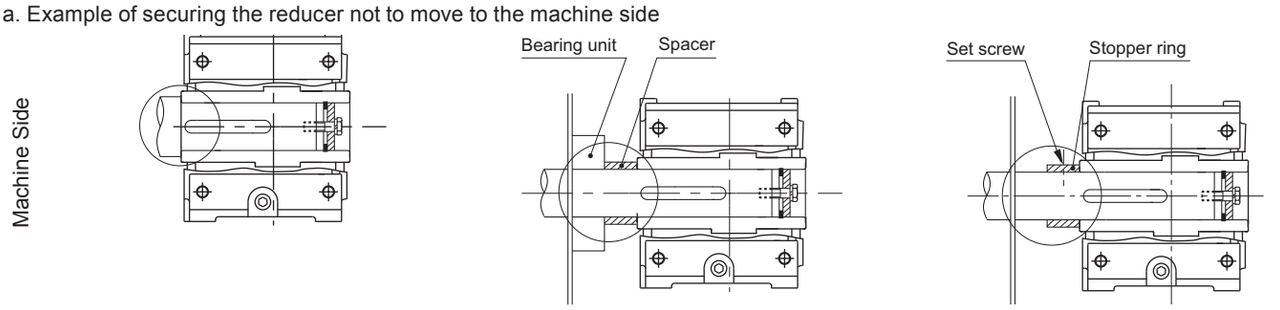

Secured by a stepped shaft

Secured by a spacer (non stepped driven shaft)

Secured by a set screw and stopper (non stepped driven shaft)

b. Example of securing the reducer not to move off from the machine side

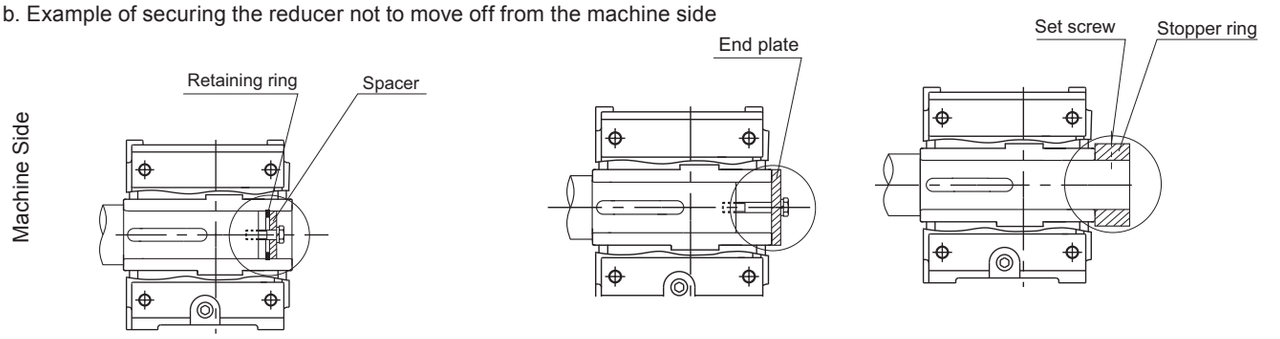

Secured by a spacer and stopper ring

Secured by an end plate

Secured by set screw and stopper ring

Handling Precautions: Hollow Shaft Type

4. Mounting Flange

Take care at the time of attachment so that the reducer casing is not twisted by the driven shaft or its hollow shaft during operation. This may cause extra force that may result in damage.

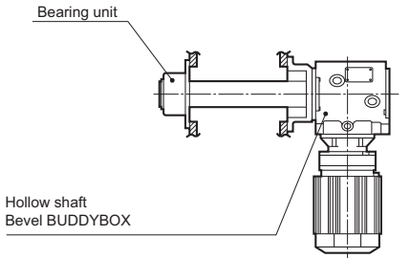

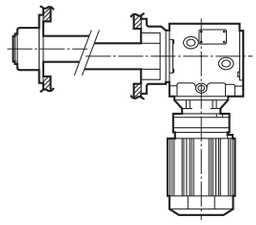

Poor Concentricity for Driven Shaft and Attachment Pilot Alignment

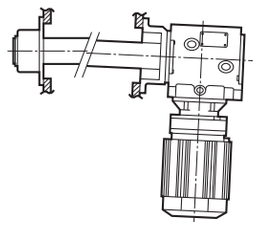

Poor Perpendicularity for Driven Shaft Center and Attachment Flange Surface

These situations may cause damage to internal parts by exerting extra force on the reducer and bearing unit.

Good Installation

Bad Installation

Safety Cover

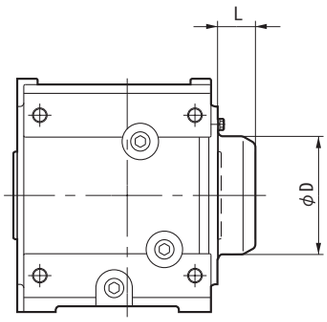

* Can be mounted on both the left and right sides.

Dimensions of Safety Cover

Frame Size	L	ϕ D
4A10 □ 4A11 □ 4A12 □ 4A14 □	43	115
4B12 □ 4B14 □ 4B16 □	47	130
4C14 □ 4C16 □ 4C17 □	57	180
4D16 □ 4D17 □ 4D18 □	62	200
4E17 □ 4E18 □ 4E19 □	69	210
4F18 □ 4F19 □	102.5	260

The □ mark of each frame size represents 0, 5, DA, DB, or DC.
The above values are subject to change without notice.
One safety cover is included with every hollow shaft type model.

Shrink Disc (Option)

Examples of Recommended Design

1. Design of Driven Shaft
   - When ordering a product, be sure to designate the orientation in which to install the shrink disk (refer to Table1 on page 236). Once the product is delivered to you, the mounting direction of the shrink disk can not be changed.
   - When designing the driven shaft, refer to the dimensions table (Table 1 on page 236).

2. Installing the Shrink Disk
   - With grease applied to the squeezing surface (before tightening of the boss), the shrink disk is shipped with the reducer, once you receive it, you can assemble it immediately.
     The inserts padded between plates can be removed by loosening all the bolts.
     If you want to remove and reuse the shrink disk, first disassemble and clean it, and apply molybdenum disulfide grease to the sliding cone, the tightening bolt, and the surface coming in contact with the bolt head.

(1) Completely degrease the boss holes and all the shafts coming in contact with them.
(2) Slide the shrink disk onto the hollow shaft. Do not tighten any tightening bolt until the driven shaft is inserted into the hollow shaft.
(3) Slide the driven shaft or reducer to insert the driven shaft into the hollow shaft.
(4) When tightening the bolts, take care to place the surfaces of both plates in parallel. In this case, a wrench with a short grip is suitable for work.
(5) Make sure that the shrink disk has been placed properly. Then, use a wrench with proper length to start tightening the tightening bolt. Tighten each bolt clockwise (not diagonally) one by one while keeping the two plates in parallel evenly. It is recommended that in this case, each bolt be tightened by 30 degrees at each tightening step.
(6) After the shrink disk has been tightened, be sure to check the torque by using torque wrench. The specified torque is described on the shrink disk nameplate.
(7) Last of all, examine whether the two plates are in parallel.

Note: Operate the shrink disk after correctly installing it by the process shown above.
Do not apply oil between hollow shaft and driven shaft.
If an improperly installed Shrink Disc is rotated, scratching or galling to shaft may occur.

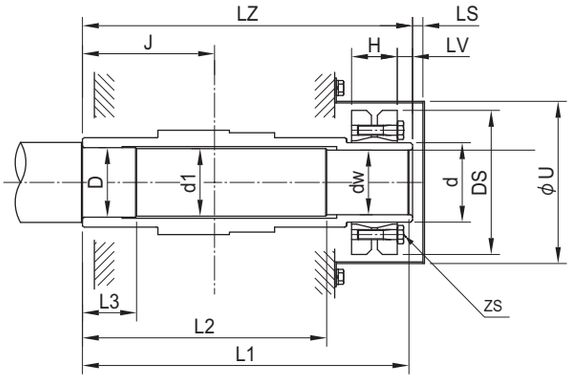

Figure 1. Hollow Shaft Dimensions for Shrink Disk mounting

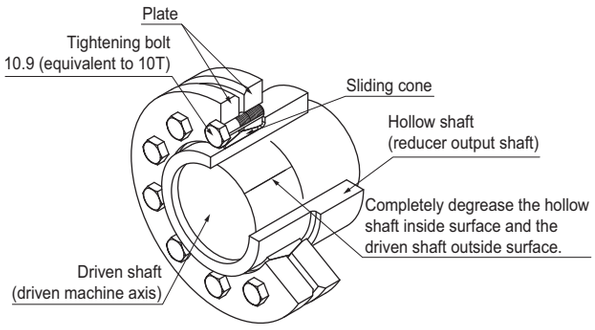

Figure 2. Shrink Disk Construction

Shrink Disc (Option)

Table 1. Shrink Disk Dimensions, Recommended dimensions of driven shafts

Frame Size	Shrink Disk								Hollow Shaft				
						Mounting Bolt						Safety Cover	
		Model	d	DS	H	ZS	Strength Class	TA N·m	J	LZ	LV	LS	U
4A10 □ 4A11 □ 4A12 □ 4A14 □	R	S-55X68	68	115	30	M6	10.9	11.8	100.5	258.5	5	7	130
	L	S-55X68	68	115	30	M6	10.9	11.8	115.5	258.5	5	7	130
4B12 □ 4B14 □ 4B16 □	R	S-65X80	80	145	32	M8	12.9	34.3	127	303.5	5	7	153
	L	S-65X80	80	145	32	M8	12.9	34.3	132	303.5	5	7	153
4C14 □ 4C16 □ 4C17 □	R	S-75X100	100	170	44	M8	12.9	34.3	156	336.5	0	12.3	184
	L	S-75X100	100	170	44	M8	12.9	34.3	129	336.5	0	12.3	184
4D16 □ 4D17 □ 4D18 □	R	H-85X110	110	185	60	M10	12.9	67.6	155	407.5	0	13.4	202
	L	H-85X110	110	185	60	M10	12.9	67.6	185	407.5	0	13.4	202
4E17 □ 4E18 □ 4E19 □	R		140	230	60	M12	12.9	118	163	440.5	0	14.5	242
	L		140	230	60	M12	12.9	118	210	440.5	0	14.5	242
4F18 □ 4F19 □	R		165	290	71	M16	10.9	245	190	513	0	17	310
	L		165	290	71	M16	10.9	245	244.5	513	0	17	310

Frame Size	Driven Shaft (Recommended Design Dimensions)					
	dw	d1	D	L1	L2	L3
4A10 □ 4A11 □ 4A12 □ 4A14 □	55h6	55.5	56h7	258.5	201	50
	55h6	55.5	56h7	258.5	201	50
4B12 □ 4B14 □ 4B16 □	65h6	65.5	66h7	303.5	244	50
	65h6	65.5	66h7	303.5	244	50
4C14 □ 4C16 □ 4C17 □	75h6	75.5	76h7	336.5	270	50
	75h6	75.5	76h7	336.5	270	50
4D16 □ 4D17 □ 4D18 □	85h6	85.5	86h7	407.5	325	65
	85h6	85.5	86h7	407.5	325	65
4E17 □ 4E18 □ 4E19 □	100h6	100.5	101h7	440.5	358	65
	100h6	100.5	101h7	440.5	358	65
4F18 □ 4F19 □	120h6	120.5	121h7	513	415	98
	120h6	120.5	121h7	513	415	98

* The □ mark of each frame size represents 0, 5, DA, DB, or DC.

Table 2. Specified Tightening Torques of Tightening Bolt

Bolt	Type	ISO 10.9·JIS 10T								
	Size	M5	M6	M8	M10	M12	M16	M20	M24	M27
Tightening Torque (N·m)		6.9	11.8	29.4	57.8	98	245	480	823	1225

Bolt	Type	ISO 12.9·JIS 10T								
	Size	M5	M6	M8	M10	M12	M16	M20	M24	M27
Tightening Torque (N·m)		7.8	13.7	34.3	67.6	118	284	559	960	1421

Table 3. Specification Code of Shrink Disk Mounting Position

Shrink Disk Mounting Position		Specification Code
In the view from motor fan cover or input shaft	Right	R61
	Left	R62

* Instead of a code, you may use the following description for designation: "Right (or left), viewing from motor fan cover (or input shaft)."

3. Removing the Shrink Disk

- To remove the shrink disk, perform the steps of the installation procedure in the reverse order.
- Loosen the bolts little by little in order so that both plates will not slant on the sliding cone.
- Never remove any bolt unless the two plates are in parallel, failing which, both plates may pop out suddenly from the sliding cone, resulting in a personal injury. For this reason, loosen all the bolts slightly, and insert a wedge between the plates so that they become parallel.

Taper Grip Bush (Option)

Examples of Recommended Design

Taper Grip Bush option offers follwing advantages:

- ●Standard bores require no key or keyway
- ●Easy installation and removal of gear unit
- ●Resistant to fretting corrosion and shaft damage

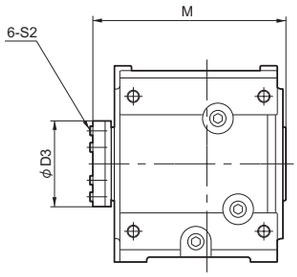

Table 1. Taper Grip Dimensions

Frame Size	ϕD4		L1	ϕD3	M	TT	Tightening Bolt		
	Standard Diameter	Option Diameter					Size	Tightening Torque	
								N・m	kgf・m
4A10 □ 4A11 □ 4A12 □ 4A14 □	55	45,50	130	104	245	198	M12	75	7.65
4B12 □ 4B14 □ 4B16 □	65	55,60	145	114	291	237	M12	140	14.3
4C14 □ 4C16 □ 4C17 □	75	50,70	170	138	320	258	M16	250	25.5
4D16 □ 4D17 □ 4D18 □	85	70,80	199	152	380	300	M16	300	30.6
4E17 □ 4E18 □ 4E19 □	100	80,90	200	170	415	354	M16	300	30.6

The □ mark represents 0, 5, DA, DB, or DC.
Consult us for frame size F.
The recommended tolerance of driven shaft that is inserted into the taper grip bushing is h8.

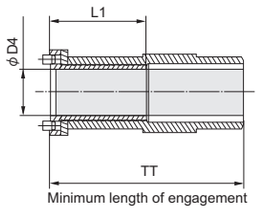

Selection of Taper Grip

Select your taper grip through the following procedure for frequent startup or large impact.This information is for selecting only the taper grip. Refer to the gearmotor selection procedure for reducer selection.

1. Selecting the Taper Grip

Formula of selection:

Ts: Taper grip slip torque N·m
TImax: Maximum load torque N·m
S: Safety factor
When load is constant in continuous operation: No impact and low inertia 2.0~3.0
When start/stop is frequent and impact occurs: Medium impact and medium inertia 3.0~4.0
Large impact and large inertia 4.0~5.0
For example, for hoist or traverse applications:
Ts ≥ TImax × S

Table 2. Taper Grip Slip Torque

Frame Size	4A10 □ 4A11 □ 4A12 □ 4A14 □	4B12 □ 4B14 □ 4B16 □	4C14 □ 4C16 □ 4C17 □	4D16 □ 4D17 □ 4D18 □	4E17 □ 4E18 □ 4E19 □
Ts（N·m）	3450	7870	12000	19000	21800

Symbol □ in each frame size represents 0, 5, DA, DB, or DC.

2. Maximum Load Torque TImax

1) For operation with constant load
Use actual load torque for selection.
2) Use the key type for operation with frequency startup and stop or with shock or vibration.
Consult us when using the taper grip. It requires special treatments, such as locking screws.

4. Other Notes

1) The taper grip section cannot acept any bending moment or thrust load.
2) The taper grip section cannot be used together with any flange type.
Use the key type in the above case.

Operating Procedure of Handling the Taper Grip and Notes on Using It

Notes:

1. Never use any oil or grease including antifriction compositions, failing which, the predetermined transmission torque will be unable to be obtained.
2. When tightening a bolt, be sure to use a torque wrench. With the predetermined torque, be sure to use the procedure as described in this maintenance manual, else the predetermined transmission may be unable to be obtained or the bolt may be loosened.
3. In addition, do not tighten any bolt with a tightening torque beyond the predetermined value, as the bolt or taper grip may break.
4. For safety purposes, additionally tighten the bolts periodically.

Taper Grip Bush(Option)

Taper Grip Assembly Procedure

1. Prepare the Shaft of the Machine on Which to Install the Reducer

1-1) Make sure that the shaft has none of rusty and convex/concave portions, specifically protrusions.
1-2) The recommended tolerance of the shaft is h8.
1-3) Using a cloth or alcohol solvent , wipe off garbage, dust, oil, or the like adhering to the shaft.
In particular, wipe oil, grease, and similar material completely.

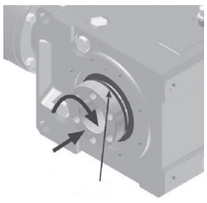

Figure 1

2. Load the Taper Grip onto the Reducer

2-1) Apply oil in a thin layer on the taper grip's threaded portion.
2-2) Place the thrust collar on the taper grip's threaded portion.
Insert the taper grip into the reducer shaft while turning it clockwise.
The taper grip must be inserted by turning it until the flange touches the thrust collar (Figure 1).
2-3) Turn the taper grip counterclockwise.
The gap between the thrust collar (or taper grip) and flange should be 1 mm or so (Figure 2).
In turn, tighten all the set bolts into the taper grip.
The tightening force should be used to an extent that each of the bolt touches the spot facing gently (i.e., with a force generated when the screw is directly turned with fingers).

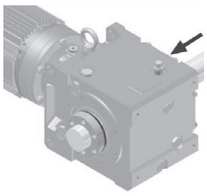

Figure 2

3. Load the Reducer onto the Machine Shaft

3-1) With the reducer (taper grip's hollow bore) on the machine shaft, insert it until it reaches the predetermined position (TT dimensions).
If it is impractical to place it inward, loosen the tightening bolt a little. Do not apply a strong force to it, for example, by hammering.
3-2) Tighten the taper grip's screw according to the following procedure:
Note that a torque wrench must always be used in tightening the bolts.
For the predetermined tightening torques for the bolts, refer to Table 1 on page 237.
[1] With one-third or so of the predetermined torque, tighten all the bolts in the order shown in Figure 4 (1 → 2 → 3 → 4 → 5 → 6).
[2] With two-thirds or so of the predetermined torque, tighten all the bolts in the same manner.
[3] With the predetermined torque, tighten all the bolts in the same manner.
[4] With the predetermined torque, tighten all the bolts repeatedly several times in the same manner.
Now the installation is complete.

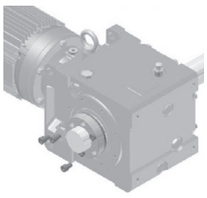

Figure 3

4. Additionally tighten the Bolts after Operation

Check the tightening torques 20 to 30 hours after operation. If a bolt seems to be loose, retighten it to the predetermined tightening torque.
In addition, check the tightening torque periodically once half year or so.

Removing the Taper Grip

1. Loosen the tightening screws slowly in order until they are separated from the thrust collar's spot facing.
2. Using a wooden hammer, tap the taper grip's flange until the reducer comes to be free from the machine shaft.
3. Tighten two tightening screws a little with fingers.
This is to prevent the taper grip from being locked when the reducer is to be disengaged from the shaft.
In this condition, remove the reducer from the machine shaft.
If you feel hard to achieve the removal, remove the reducer by taking advantage of taper grip's flange with a puller.

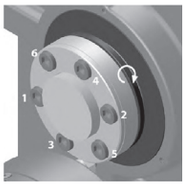

Figure 4

Torque Arm

- Four types of torque arms are available: Attachment, Banjo, Turnbuckle and T-Type.
  Torque arm mounting bolts, rubber bushes, and disk springs are also available to be procured separately.
- At the whirl stop of the torque arm, make the reducer and driven shaft free to an extent that no extra force can be applied to them. Never fix the torque arm using a whirl stop or the like.
- The torque arm may be used only for continuous operation in a constant direction, or for a very low startup frequency.
  If the startup or stop frequency is high or repetition of forward and backward operation is performed, take measures to mitigate the shock by installing a rubber bush and disk spring (as a shock absorber) between the torque arm and each mounting bolt (or spacer).

1. Attachment Type

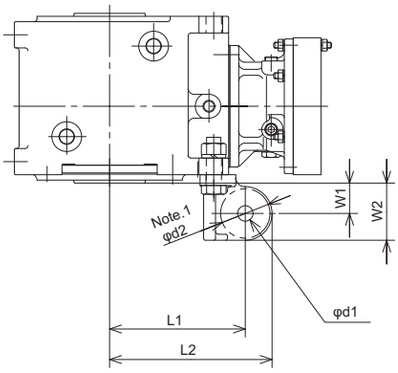

Table 1. Torque Arm Dimensions (Attachment Type)

Frame Size	L1	L2	W1	W2	T	d1	d2	Mounting Bolt
4A10 □ 4A11 □ 4A12 □ 4A14 □	161	191	36	66	20	18	53	M16
4B12 □ 4B14 □ 4B16 □	195	231	48	84	26	22	66	M20
4C14 □ 4C16 □ 4C17 □	232	277	61	106	30	26	83	M24
4D16 □ 4D17 □ 4D18 □	279	334	74	129	36	33	103	M30
4E17 □ 4E18 □ 4E19 □	306	361	73.5	128.5	36	33	103	M30

●Installation with Rubber Bush

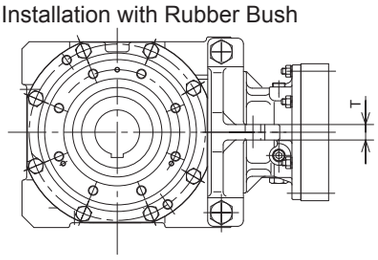

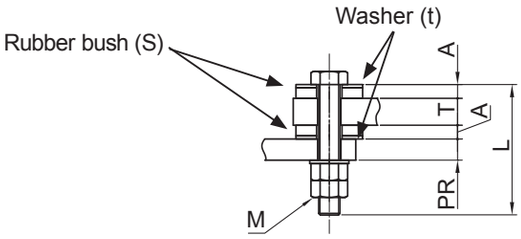

- Material of rubber bush: Black natural rubber
- Hardness: IRHD 75
- Note that the rubber may degrade, depending on the ambient conditions. (Use a disk spring in ambient conditions where the rubber may degrade easily (e.g., at a high temperature of 50°C, where the product may be exposed to direct sunlight, or if the product may be splashed with oil)).

Table 2. Installation Dimensions for Use of Rubber Bush

Frame Size	A	M (Nut)		T	S (Bush thickness)	t (Washer thickness)	Bolt length L
4A10 □ 4A11 □ 4A12 □ 4A14 □	25	M16	40	20	10	15	105+PR
4B12 □ 4B14 □ 4B16 □	25	M20	50	26	10	15	120+PR
4C14 □ 4C16 □ 4C17 □	27	M24	60	30	10	17	135+PR
4D16 □ 4D17 □ 4D18 □	30	M30	85	36	10	20	160+PR
4E17 □ 4E18 □ 4E19 □	32	M30	85	36	10	22	165+PR

●Installation with Disk Spring

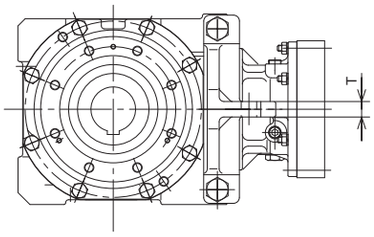

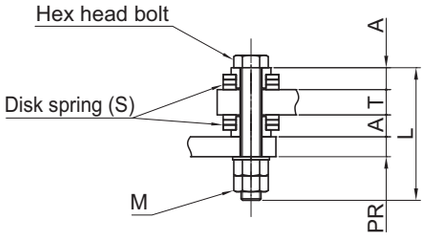

Table 3. Installation Dimensions for Use of Disk Spring

Frame Size	A	M (Nut)		T	S (Disk spring, nominal)	Quantity (Disk spring)	Bolt length L
4A10 □ 4A11 □ 4A12 □ 4A14 □	16.1	M16	40	20	A50	2x3	80+PR
4B12 □ 4B14 □ 4B16 □	22.4	M20	50	26	A63	2x4	115+PR
4C14 □ 4C16 □ 4C17 □	26.7	M24	60	30	A80	2x3	135+PR
4D16 □ 4D17 □ 4D18 □	32.2	M30	85	36	A90	2x4	165+PR
4E17 □ 4E18 □ 4E19 □	32.2	M30	85	36	A100	2x3	165+PR

●Example of Using the Torque Arm

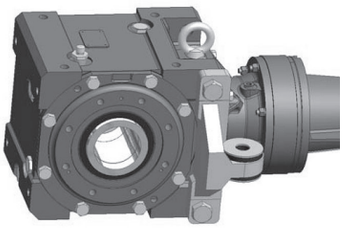

2. Banjo Type

Frame Size A ～ D

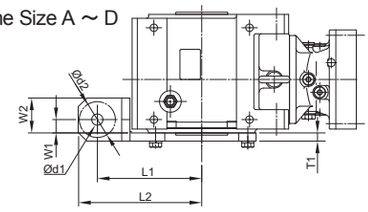

Frame Size E、F

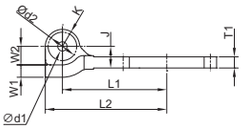

Table 1. Torque Arm Dimensions (Banjo Type)

Frame Size	L1	L2	W1	W2	T	T1	ϕ d1	ϕ d2	J	K	Mounting Bolt
4A10 □ 4A11 □ 4A12 □ 4A14 □	160		17.3	47.3	19.1	12.7	18	50	-	-	M16
4B12 □ 4B14 □ 4B16 □	195		16.9	52.9	25.4	19.1	22	60	-	-	M20
4C14 □ 4C16 □ 4C17 □	240		30.9	80.9	25.4	19.1	26	83	-	-	M24
4D16 □ 4D17 □ 4D18 □	295		29.6	84.6	31.8	25.4	33	90	-	-	M30
4E17 □ 4E18 □ 4E19 □	335	390	40	60	40	36	33	92	70	55	M30
4F18 □ 4F19 □	450	515	50	95	50	46	39	110	105	65	M36

●Installation with Rubber Bush

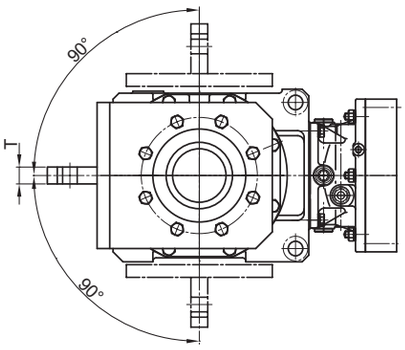

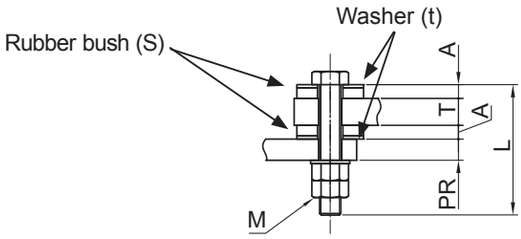

- Material of rubber bush: Black natural rubber
- Hardness: IRHD 75
- Note that the rubber may degrade, depending on the ambient conditions.
(Use a disk spring in ambient conditions where the rubber may degrade easily (e.g., at a high temperature not lower than 50°C, where the product may be exposed to direct sunlight, or if the product may be splashed with oil)).

Table 2. Installation Dimensions for Use of Rubber Bush

Frame Size	A	M (Nut)		T	S (Bush thickness)	t (Washer thickness)	Bolt length L
4A10 □ 4A11 □ 4A12 □ 4A14 □	25	M16	40	19.1	10	15	105+PR
4B12 □ 4B14 □ 4B16 □	25	M20	50	25.4	10	15	120+PR
4C14 □ 4C16 □ 4C17 □	27	M24	60	25.4	10	17	130+PR
4D16 □ 4D17 □ 4D18 □	30	M30	85	31.8	10	20	155+PR
4E17 □ 4E18 □ 4E19 □	30	M30	85	40	10	20	160+PR
4F18 □ 4F19 □	32	M36	110	50	10	22	110+PR

●Installation with Disk Spring

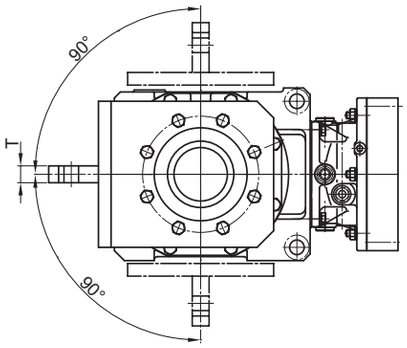

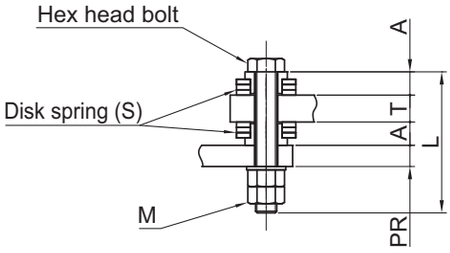

Table 3. Installation Dimensions for Use of Disk Spring

Frame Size	A	M (Nut)		T	S (Disk spring, nominal)	Quantity (Disk spring)	Bolt length L
4A10 □ 4A11 □ 4A12 □ 4A14 □	16.1	M16	40	19.1	A50	2x3	85+PR
4B12 □ 4B14 □ 4B16 □	22.4	M20	50	25.4	A63	2x4	115+PR
4C14 □ 4C16 □ 4C17 □	26.7	M24	60	25.4	A80	2x3	130+PR
4D16 □ 4D17 □ 4D18 □	32.2	M30	85	31.8	A90	2x4	160+PR
4E17 □ 4E18 □ 4E19 □	32.2	M30	85	40	A100	2x3	175+PR
4F18 □ 4F19 □	38.2	M36	95	50	A100	2x4	190+PR

●Example of Using the Torque Arm

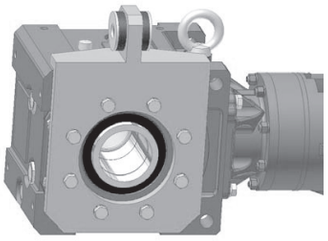

Note: The oil fill/drain position on the reducer may interfere the torque arm or mechanical device, depending on the mounting direction of the banjo type torque arm or the layout of the mechanical device.
The oil fill/drain position can be changed. Check whether some interference occurs. Then, consult us, if you found some problem.

Torque Arm

3. Turnbuckle Type

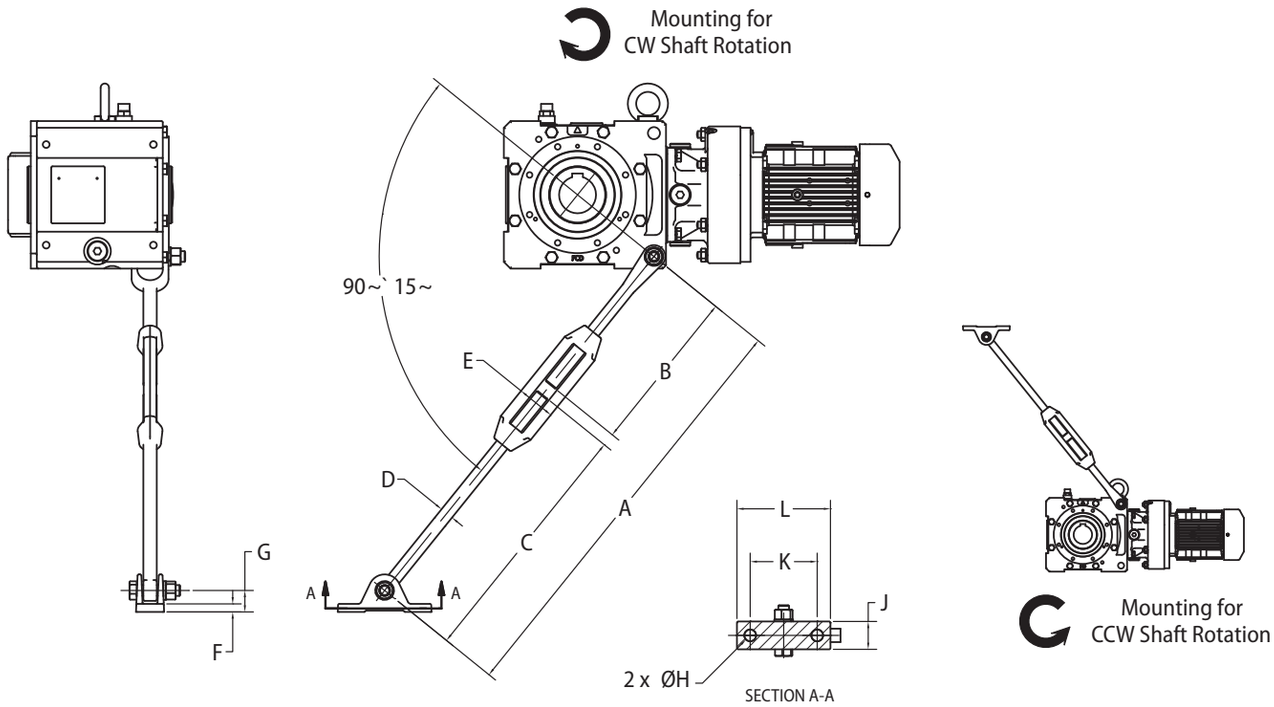

Turnbuckle Type Torque Arm Dimensions												
Frame Size	A Min	A Max	B	C	D Thread	E	F	G	ØH	J	K	L
4A	640	730	246	375	M20	57	12.0	32	17.5	42	100	140
4B	660	750	263	375	M24	59	20.5	54	17.5	70	121	168
4C	660	750	263	375	M24	59	20.5	54	17.5	70	121	168
4D, 4E	860	950	465 [2]	375	M24	59	20.5	54	17.5	70	121	168

Note: [1] The Cyclo® BBB4 is shown in Y1 mounting position; use two turnbuckle torque arms if application requires shaft rotation in both directions and use torque arm in tension, not compression. Consult Operation and Maintenance Manual or the Factory when mounting in positions other than Y1.
[2] Value may vary from shown.
[3] Turnbuckle Type torque arm is not available for size F Cyclo® BBB4 units. Consult Factory for F-size torque arm type and dimensions.
4 Dimensions shown are for reference only and are subject to change without notice, unless certified. Certified prints are available after receipt of an order; consult factory.

4. T-Type

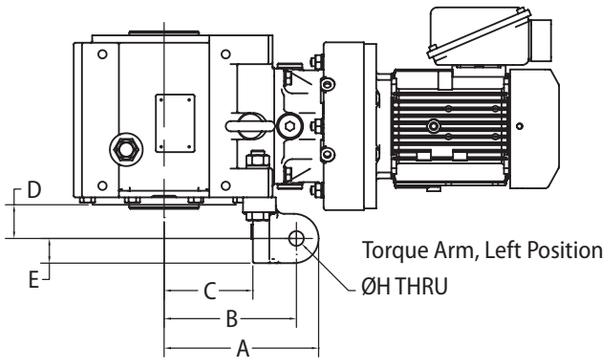

Torque Arm, Left Position

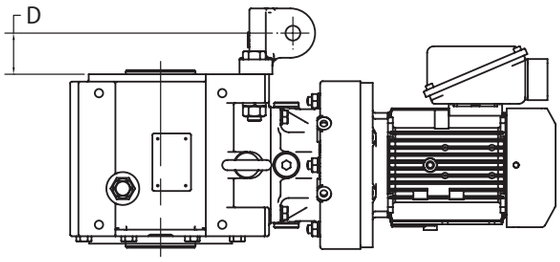

Torque Arm, Right Position

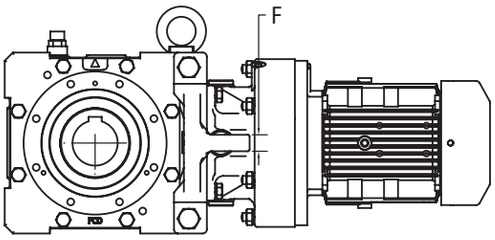

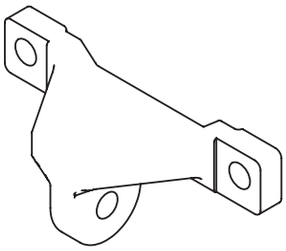

T- Type Torque Arm Dimensions								
Frame Size	A	B	C	D Left [2]	D Right [2]	E	F	ØH
4A	188	161	108	41	50	30	20	18
4B	228	195	127	53	62	36	29	22
4C	274	232	156	66	75	45	32	26
4D	327	279	188	81	91	55	38	33
4E	361	306	210	81	91	55	36	33

Note: [1] The Cyclo® BBB4 is shown in Y1 mounting position
[2] D dimension is from flange-mount casing surface to hole ØH.
[3] Turnbuckle Type torque arm is not available for size F Cyclo® BBB4 units.
Consult Factory for F-size torque arm type and dimensions.
4 Dimensions shown are for reference only and are subject to change without notice, unless certified.
Certified prints are available after receipt of an order; consult factory.

Nameplate

1. For Gearmotors

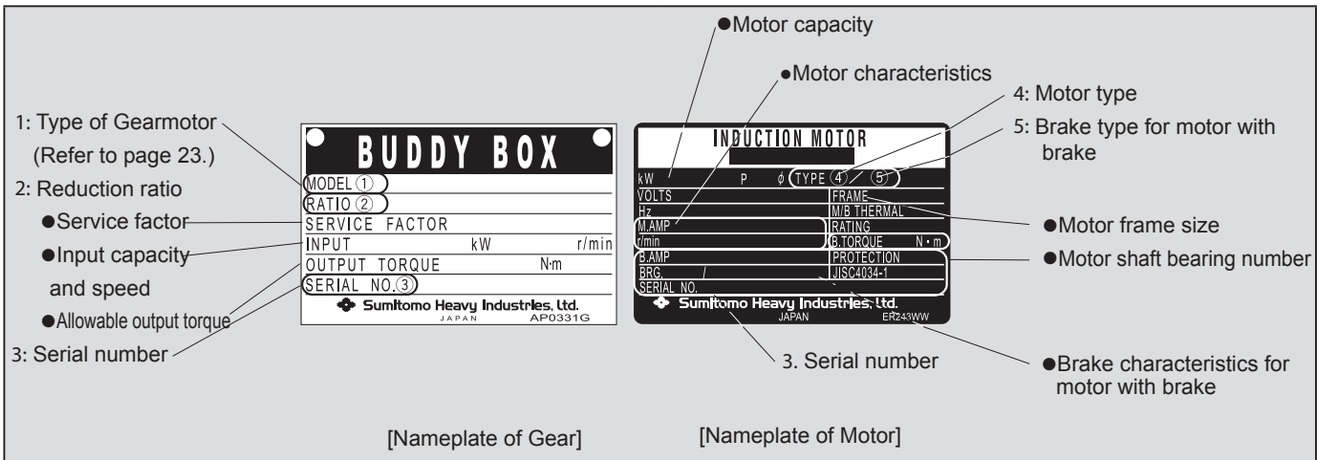

Fig. 1 Gearmotor Nameplates

2. For Reducers

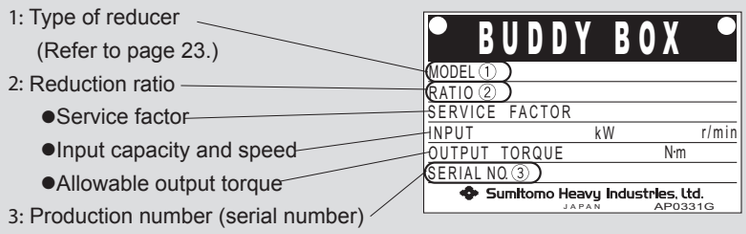

Fig. 2 Reducer Nameplates

Construction Drawings

1. Construction Drawings of Bevel BUDDYBOX® Gear Section

Gear Section Construction Drawings

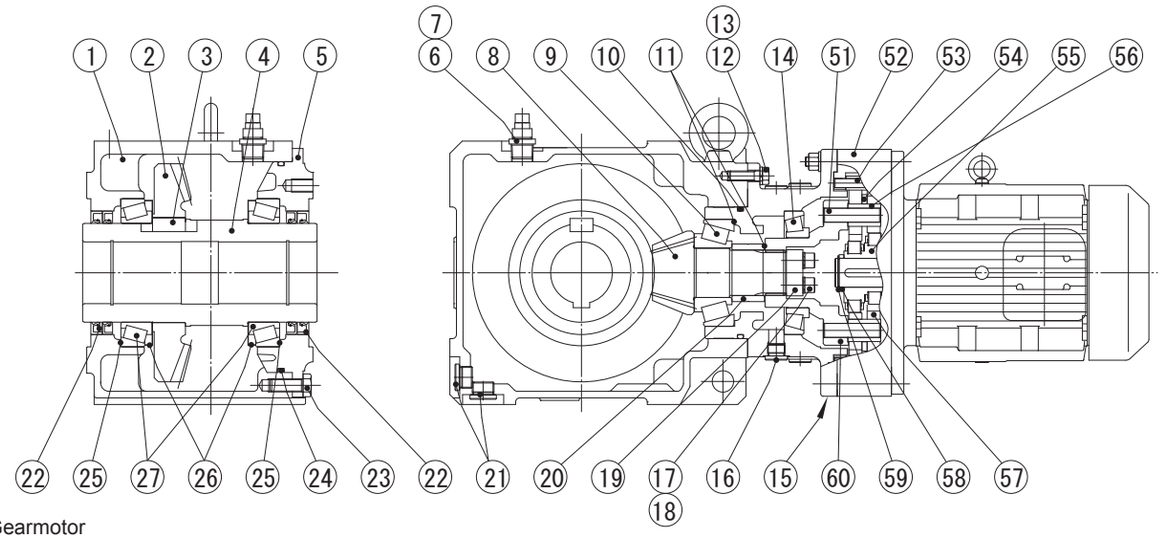

Fig. 1 Gearmotor

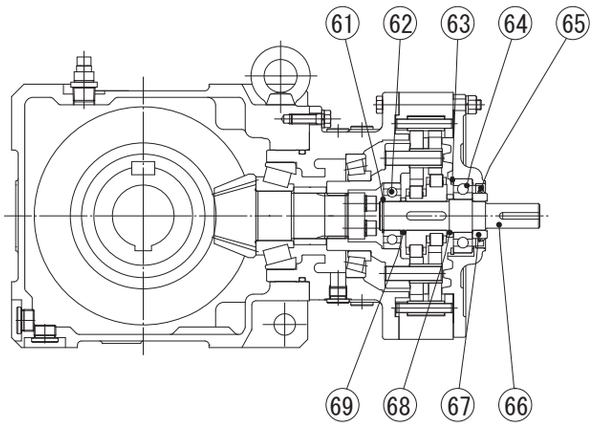

Fig. 2 Reducer

Main Parts of Bevel BUDDYBOX Gear Section

No.	Part Name	No.	Part Name	No.	Part Name	No.	Part Name
1	Casing	16	Hex socket plug	51	Slow speed shaft pin	66	Input shaft
2	Gear	17	Hex socket bolt	52	Ring gear housing	67	Collar
3	Key	18	Spring washer	53	Ring gear pin	68	Spacer
4	Hollow shaft	19	End plate	54	Space ring	69	Spacer
5	Output shaft cover	20	Collar	55	Eccentric cam		
6	Bush	21	Hex socket plug	56	Slow speed shaft roller		
7	Air vent	22	Oil seal	57	Cycloid disc		
8	Pinion shaft	23	Hex head bolt	58	Spacer		
9	Pinion shaft A bearing	24	O ring	59	Retaining ring		
10	O ring	25	Shim	60	Pin carrier		
11	Shim	26	NILOS ring	61	Retaining ring		
12	Hex head bolt	27	Output shaft bearing	62	Input shaft A bearing		
13	Spring washer			63	Retaining ring		
14	Pinion shaft B bearing			64	Input shaft B bearing		
15	Flanged casing			65	Oil seal		

Motor Construction Drawing & Type

1. Construction Drawings of Motor for Gearmotor

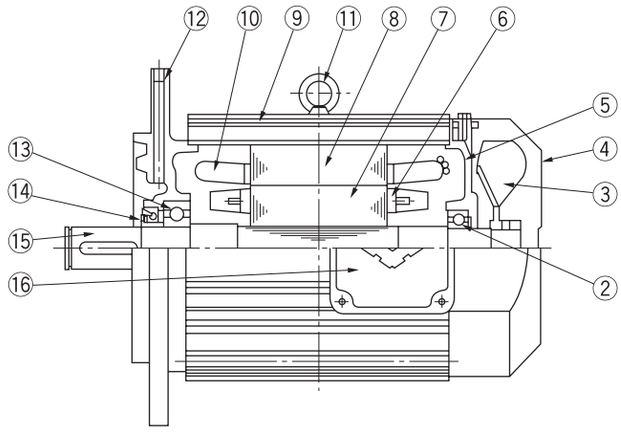

Fig. 1 Example of 80~132M Frame

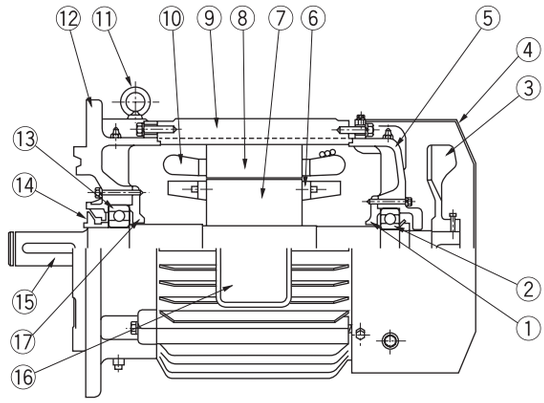

Fig. 2 Example of Frame Size 160 or Above

Main parts of Motor Section

No.	Part Name	No.	Part Name	No.	Part Name
1	Bearing cover	7	Rotor core	13	Bearing A on motor shaft
2	Bearing B on motor shaft	8	Stator core	14	Oil slinger collar (oil seal)
3	Fan	9	Frame	15	Motor shaft
4	Fan cover	10	Stator windings	16	Terminal box
5	Cover at non-load side	11	Eyebolt	17	Bearing cover
6	Rotor conductor	12	Cyclo flange bracket		

2. Motor Type

H T C — E X ☐ ☐

Mounting Type	
Blank	Flange type
H	Foot mount type

Type of Enclosure	
T	Totally enclosed

Rotor	
C	Standard squirrel cage
K	Special squirrel cage

Cooling type	
F	With self-cooling fan (external fan)
B	With forced ventilation
E	Without fan (non-ventilated)

Protection type	
A	Increased safety type
B	Increased safety type
C	Flameproof type
CX	Flameproof type
X	Outdoor (non-explosion-
Blank	Indoor (non-explosion-

Power source	
V	Inverter drive (AF motor)
Blank	Commercial power

Provisions for standards and	
E	High-efficiency motor for IEC standards
Blank	Other motors

Motor Characteristics

Characteristics of Standard, Non-Explosion Proof Motors

(1) 200V Class

Motor Frame Size	Pole	4P														
	Power	220V-50Hz					230V-50Hz					220V-60Hz				
	Output power [kW]	Rated Current	Torque max.[%]	Starting Torque [%]	Starting Current [A]	Speed [r/min]	Rated Current	Torque max.[%]	Starting Torque [%]	Starting Current [A]	Speed [r/min]	Rated Current	Torque max.[%]	Starting Torque [%]	Starting Current [A]	Speed [r/min]
V-63S	0.10	0.60	235	230	2.3	1420	0.62	261	261	2.3	1430	0.53	220	202	2.1	1700
V-63M	0.20	1.0	210	206	3.8	1410	1.0	231	236	4.0	1420	0.95	186	191	3.5	1690
V-63M	0.25	1.2	182	195	4.2	1380	1.2	202	222	4.4	1400	1.2	153	161	3.7	1640
V-71M	0.40	2.0	200	201	7.3	1410	2.1	221	229	7.8	1400	1.8	188	185	6.6	1680
V-80S	0.55	2.4	182	206	9.2	1410	2.4	200	225	9.6	1420	2.3	164	166	8.6	1680
V-80M	0.75	3.3	211	193	13.1	1420	3.3	217	212	13.8	1430	3.1	189	180	12.3	1720
V-90S	1.1	4.7	215	200	21.7	1420	4.6	236	223	22.8	1420	4.4	189	170	19.9	1690
V-90L	1.5	6.1	204	192	27.9	1420	6.0	226	212	28.9	1430	5.7	196	175	25.5	1700
V-100L	2.2	8.7	203	213	42.1	1420	8.3	231	255	45.0	1430	8.1	207	185	38.0	1690
V-112S	3.0	11.2	205	213	61	1420	11.1	224	237	64	1420	10.8	175	155	54	1720
V-112M	3.7	13.4	219	218	80	1410	17.8	308	340	114	1440	12.9	207	178	70	1700

(2) 400V Class

Motor Frame Size	Pole	4P														
	Power	380V-50Hz					400V-50Hz					415V-50Hz				
	Output power [kW]	Rated Current	Torque max.[%]	Starting Torque [%]	Starting Current [A]	Speed [r/min]	Rated Current	Torque max.[%]	Starting Torque [%]	Starting Current [A]	Speed [r/min]	Rated Current	Torque max.[%]	Starting Torque [%]	Starting Current [A]	Speed [r/min]
V-63S	0.10	0.34	235	230	1.3	1420	0.36	261	261	1.3	1430	0.37	281	286	1.4	1430
V-63M	0.20	0.61	210	206	2.2	1410	0.62	233	236	2.3	1420	0.63	251	260	2.4	1420
V-63M	0.25	0.70	182	195	2.4	1380	0.70	202	222	2.5	1380	0.70	220	242	2.3	1400
V-71M	0.40	1.2	200	201	4.2	1410	1.2	221	229	4.5	1420	1.3	236	250	4.7	1420
V-80S	0.55	1.4	182	206	5.3	1410	1.4	200	225	5.5	1420	1.4	218	248	5.8	1420
V-80M	0.75	1.9	211	193	7.6	1420	1.9	219	215	8.0	1430	2.0	237	232	8.4	1440
V-90S	1.1	2.7	215	200	12.5	1420	2.7	236	223	13.2	1420	2.7	256	243	14.3	1430
V-90L	1.5	3.5	204	192	16.1	1420	3.5	228	224	17.1	1430	3.6	242	236	17.8	1430
V-100L	2.2	5.0	203	213	24.3	1420	4.8	231	255	26.0	1430	5.0	240	263	26.8	1430
V-112S	3.0	6.5	205	213	35.1	1420	6.4	224	237	37.0	1420	6.2	241	255	35.7	1420
V-112M	3.7	7.8	219	218	45.9	1410	7.5	231	236	46.9	1420	7.7	259	269	51	1430
V-132S	5.5	11.3	215	227	69	1410	11.1	237	256	73	1420	11.0	256	281	76	1430
V-132M	7.5	15.0	228	232	93	1450	14.8	252	261	99	1450	14.8	270	284	103	1450
V-160M	11.0	21.5	231	250	139	1450	21.0	256	282	147	1450	20.8	274	308	154	1450
G-160L	15.0	27.7	241	235	170	1460	26.6	271	265	180	1470	26.0	294	289	188	1470
F-180MG	18.5	34.5	262	277	245	1450	33.1	293	312	261	1450	32.3	319	340	272	1460
F-180MG	22.0	40.8	252	269	280	1450	39.3	281	302	297	1450	38.9	304	328	310	1450
F-180L	30.0	56	218	236	325	1450	54	244	265	345	1450	54	264	286	361	1450
F-200L	37.0	70	256	285	479	1450	66	256	287	446	1460	65	277	311	467	1460
F-200L	45.0	84	251	286	564	1440	81	252	288	538	1450	80	271	310	559	1450

Motor Frame Size	Pole	4P				
	Power	440V-60Hz				
	Output power [kW]	Rated Current	Torque max.[%]	Starting Torque [%]	Starting Current [A]	Speed [r/min]
V-63S	0.10	0.32	300	289	1.4	1730
V-63M	0.20	0.54	268	266	2.4	1720
V-63M	0.25	0.60	232	251	2.6	1700
V-71M	0.40	1.0	256	262	4.6	1730
V-80S	0.55	1.2	224	240	5.9	1720
V-80M	0.75	1.7	247	242	8.4	1740
V-90S	1.1	2.3	257	260	13.6	1720
V-90L	1.5	3.0	250	243	17.5	1740
V-100L	2.2	4.2	248	260	26.2	1720
V-112S	3.0	5.5	238	225	37.0	1720
V-112M	3.7	6.6	246	238	46.4	1720
V-132S	5.5	9.6	254	263	73	1720
V-132M	7.5	12.8	267	271	98	1750
V-160M	11.0	18.4	270	296	145	1750
G-160L	15.0	23.8	275	280	175	1770
F-180MG	18.5	29.6	295	324	252	1750
F-180MG	22.0	38.8	199	216	225	1720
F-180L	30.0	47.8	249	280	334	1740
F-200L	37.0	59	259	306	429	1730
F-200L	45.0	72	255	311	516	1730

Note: 1. The characteristics of the 4-pole motor with built-in brake is the same as shown above.
2. For the electrical current of the brakes, refer to Table 2 on Page 253.
3. Consult us for confirmed values. Values in the above table are subject to change without notice.
4. Consult us for Characteristics of 55kW Motor.

Motor Characteristics

Characteristics of 6P Motors

(1) 200V Class

Motor Frame Size	Pole	6P														
	Power	200V-50Hz					200V-60Hz					220V-60Hz				
	Output power [kW]	Rated Current	Torque max.[%]	Starting Torque [%]	Starting Current [A]	Speed [r/min]	Rated Current	Torque max.[%]	Starting Torque [%]	Starting Current [A]	Speed [r/min]	Rated Current	Torque max.[%]	Starting Torque [%]	Starting Current [A]	Speed [r/min]
F-180MG	15.0	55	271	232	358	980	55	222	195	308	1180	49.9	276	246	344	1180
F-180L	18.5	71	311	274	500	990	66	258	234	430	1180	62	321	293	480	1190
F-180L	22.0	83	261	230	500	990	79	216	196	430	1180	73	269	246	480	1180
F-200L	30.0	111	269	267	694	960	106	221	228	598	1180	98	275	287	668	1180
F-200L	37.0	137	289	293	912	980	130	237	251	784	1170	120	296	314	878	1170
F-225S	45.0	163	238	244	962	980	158	195	209	818	1170	144	242	262	914	1180
F-250S	55	198	231	242	1146	980	194	188	208	970	1170	176	234	260	1084	1180
F-250M	75	269	271	296	1830	980	261	221	255	1536	1170	239	274	320	1718	1180

(2) 400V Class

Motor Frame Size	Pole	6P														
	Power	400V-50Hz					400V-60Hz					440V-60Hz				
	Output power [kW]	Rated Current	Torque max.[%]	Starting Torque [%]	Starting Current [A]	Speed [r/min]	Rated Current	Torque max.[%]	Starting Torque [%]	Starting Current [A]	Speed [r/min]	Rated Current	Torque max.[%]	Starting Torque [%]	Starting Current [A]	Speed [r/min]
F-180MG	15.0	27.7	271	232	179	980	27.3	222	195	154	1180	25.0	276	246	172	1180
F-180L	18.5	35.6	311	274	250	990	33.2	258	234	215	1180	31.1	321	293	240	1190
F-180L	22.0	41.4	261	230	250	990	39.5	216	196	215	1180	36.3	269	246	240	1180
F-200L	30.0	56	269	267	347	960	53	221	228	299	1180	48.8	275	287	334	1180
F-200L	37.0	68	289	293	456	980	65	237	251	392	1170	60	296	314	439	1170
F-225S	45.0	82	238	244	481	980	79	195	209	409	1170	72	242	262	457	1180
F-250S	55	99	231	242	573	980	97	188	208	485	1170	88	234	260	542	1180
F-250M	75	135	271	296	915	980	131	221	255	768	1170	119	274	266	859	1180

Note: 1. Values in parenthesis in the above table is designed value. Consult us for detailed values.
2. Consult us for confirmed values. Values in the above table are subject to change without notice.

Motor Characteristics

Characteristics of Inverter Duty Motor

Motor Frame Size	Pole	4P							
	Power	220V-60Hz				380V-60Hz			
	Output [kW]	Frequency [Hz]	Voltage [V]	Rated Current	Speed [r/min]	Frequency [Hz]	Voltage [V]	Rated Current	Speed [r/min]
VA-63S	0.10	60	220	0.85	1765	60	380	0.38	1755
		6.0	34.0	0.75	120	6.0	68	0.37	125
VA-63M	0.20	60	220	1.6	1760	60	380	0.69	1750
		6.0	34.0	1.5	130	6.0	68	0.75	130
VA-71M	0.40	60	220	2.4	1745	60	380	1.1	1725
		6.0	35.0	2.2	115	6.0	70	1.1	115
VA-80M	0.75	60	220	4.0	1755	60	380	1.9	1735
		6.0	31.0	3.9	120	6.0	62	1.9	120
VA-90L	1.5	60	220	6.4	1735	60	380	3.3	1705
		6.0	33.0	6.5	105	6.0	66	3.2	110
VA-100L	2.2	60	220	9.1	1755	60	380	4.7	1740
		6.0	31.0	9.3	140	6.0	62	4.6	135
VA-112M	3.7	60	220	14.0	1750	60	380	7.7	1730
		6.0	30.0	14.8	125	6.0	60	7.4	120
VA-132S	5.5	60	220	20.2	1760	60	380	11.2	1745
		6.0	30.0	21.3	135	6.0	60	10.7	130
VA-132M	7.5	60	220	27.4	1765	60	380	15.2	1750
		6.0	30.0	28.2	145	6.0	60	14.1	145
G-160L	11.0	60	220	38.5	1770	60	380	21.7	1755
		6.0	32.0	39.6	155	6.0	64	19.7	155
F-180MG	15.0	60	220	53	1780	60	380	30.3	1770
		6.0	32.0	53	165	6.0	64	26.3	165
F-180L	22.0	60	220	77	1775	60	380	44.5	1765
		6.0	32.0	79	160	6.0	64	39.4	160
BF-200L	30.0	60	220	100	1780	60	380	58	1770
		6.0	32.0	101	165	6.0	64	51	165
BF-200L	37.0	60	220	123	1775	60	380	72	1765
		6.0	30.0	123	165	6.0	64	62	165

Motor Frame Size	Pole	4P			
	Power	415V-60Hz			
	Output [kW]	Frequency [Hz]	Voltage [V]	Rated Current	Speed [r/min]
VA-63S	0.10	60	415	0.40	1760
		6.0	68	0.37	125
VA-63M	0.20	60	415	0.75	1760
		6.0	68	0.75	130
VA-71M	0.40	60	415	1.1	1740
		6.0	70	1.1	115
VA-80M	0.75	60	415	1.9	1745
		6.0	62	1.9	120
VA-90L	1.5	60	415	3.1	1725
		6.0	66	3.2	110
VA-100L	2.2	60	415	4.4	1750
		6.0	62	4.6	135
VA-112M	3.7	60	415	7.2	1745
		6.0	60	7.4	120
VA-132S	5.5	60	415	10.5	1755
		6.0	60	10.7	130
VA-132M	7.5	60	415	14.2	1760
		6.0	60	14.1	145
G-160L	11.0	60	415	20.1	1765
		6.0	64	19.7	155
F-180MG	15.0	60	415	27.8	1775
		6.0	64	26.3	165
F-180L	22.0	60	415	40.7	1770
		6.0	64	39.4	160
BF-200L	30.0	60	415	53	1775
		6.0	64	51	165
BF-200L	37.0	60	415	65	1775
		6.0	64	62	165

Note: 1. Consult us for confirmed values. Values in the above table are subject to change without notice.
2. Consult us for characterisitics of other voltages

Motor Characteristics

Characteristics of Increased Safety Motors (Japanese Standard)

(1) 200V Class

Motor Frame Size	Pole	4P														
	Power	200V-50Hz					200V-60Hz					220V-60Hz				
	Output power [kW]	Rated Current	Torque max.[%]	Starting Torque [%]	Starting Current [A]	Speed [r/min]	Rated Current	Torque max.[%]	Starting Torque [%]	Starting Current [A]	Speed [r/min]	Rated Current	Torque max.[%]	Starting Torque [%]	Starting Current [A]	Speed [r/min]
V-63S	0.10	0.69	265	281	2.7	1420	0.60	236	245	2.5	1690	0.62	285	297	2.8	1720
V-63M	0.20	1.2	232	233	4.6	1410	1.1	210	207	4.2	1690	1.1	254	250	4.8	1710
V-71M	0.40	2.3	237	237	9.1	1380	2.0	210	210	8.3	1650	2.0	257	257	9.4	1680
V-80M	0.75	3.9	234	215	16.0	1420	3.4	211	190	15.1	1720	3.3	253	242	16.8	1740
V-90L	1.5	7.0	242	224	34.1	1430	6.3	205	192	31.2	1710	6.0	250	243	34.9	1730
V-100L	2.2	9.6	268	255	52	1430	8.8	229	204	46.9	1700	8.3	282	260	52	1720
F-112M	3.7	15.1	262	236	94	1430	14.2	216	188	83	1710	13.1	264	238	93	1730
F-132S	5.5	22.9	313	286	158	1420	21.1	264	229	139	1700	19.7	325	291	156	1720
F-132M	7.5	29.5	274	261	198	1450	27.4	240	224	175	1750	25.6	292	271	195	1760
F-160M	11.0	41.9	305	297	302	1450	39.5	263	247	265	1740	36.7	322	309	296	1750
G-160L	15.0	53	271	265	360	1460	52	220	222	313	1750	48	275	280	349	1760
F-180LG	18.5	66	293	312	522	1480	65	236	257	450	1780	59	295	324	504	1780
F-180LG	22.0	79	246	262	522	1480	78	199	216	450	1770	70	248	272	504	1780
F-200LG	30.0	105	245	281	706	1470	105	195	231	610	1760	94	245	292	684	1770
F-200L	37.0	128	245	289	857	1470	128	195	241	742	1750	115	245	305	832	1760
F-225S	45.0	154	243	228	985	1470	154	198	193	844	1770	139	246	241	943	1770
F-225S	55	186	267	261	1328	1470	186	217	225	1130	1770	168	269	280	1261	1770

Motor Frame Size	Pole	6P														
	Power	200V-50Hz					200V-60Hz					220V-60Hz				
	Output power [kW]	Rated Current	Torque max.[%]	Starting Torque [%]	Starting Current [A]	Speed [r/min]	Rated Current	Torque max.[%]	Starting Torque [%]	Starting Current [A]	Speed [r/min]	Rated Current	Torque max.[%]	Starting Torque [%]	Starting Current [A]	Speed [r/min]
F-180LG	15.0	56	271	232	358	980	55	222	195	308	1180	50	276	246	344	1180
F-180L	18.5	72	311	274	500	990	67	258	234	430	1180	63	321	293	480	1190
F-180L	22.0	84	261	230	500	990	79	216	196	430	1180	73	269	246	480	1180
F-200L	30.0	107	252	253	652	980	107	204	212	558	1170	97	256	287	668	1170
F-225S	37.0	136	239	241	793	980	132	196	206	678	1170	121	243	314	878	1180
F-225S	45.0	163	235	245	946	970	163	190	208	809	1170	146	237	262	914	1170
F-250S	55	199	242	257	1184	970	198	196	219	1011	1170	178	244	260	1084	1180

(2) 400V Class

Motor Frame Size	Pole	4P														
	Power	400V-50Hz					400V-60Hz					440V-60Hz				
	Output power [kW]	Rated Current	Torque max.[%]	Starting Torque [%]	Starting Current [A]	Speed [r/min]	Rated Current	Torque max.[%]	Starting Torque [%]	Starting Current [A]	Speed [r/min]	Rated Current	Torque max.[%]	Starting Torque [%]	Starting Current [A]	Speed [r/min]
V-63S	0.10	0.36	255	261	1.3	1420	0.31	233	224	1.2	1700	0.32	277	289	1.4	1720
V-63M	0.20	0.62	233	236	2.3	1410	0.54	212	202	2.1	1690	0.54	257	266	2.4	1710
V-71M	0.40	1.2	229	229	4.5	1390	1.0	205	201	4.1	1650	1.0	249	262	4.6	1680
V-80M	0.75	1.9	234	215	8.0	1420	1.7	211	190	7.6	1720	1.7	253	242	8.4	1740
V-90L	1.5	3.5	242	224	17.1	1430	3.1	205	192	15.6	1710	3.0	250	243	17.5	1730
V-100L	2.2	4.8	268	255	26.0	1430	4.4	229	204	23.5	1700	4.2	282	260	26.2	1720
F-112M	3.7	7.5	262	236	46.9	1430	7.1	216	188	41.4	1710	6.6	264	238	46.4	1730
F-132S	5.5	11.4	313	286	79	1420	10.5	264	229	70	1700	9.9	325	291	78	1720
F-132M	7.5	14.8	274	261	99	1450	13.7	240	224	88	1750	12.8	292	271	98	1760
F-160M	11.0	21.0	305	297	151	1450	19.7	263	247	133	1740	18.3	322	309	148	1750
G-160L	15.0	26.8	271	265	180	1460	26.1	220	222	157	1750	23.8	275	280	175	1760
F-180LG	18.5	33.1	293	312	261	1480	32.3	236	257	225	1780	29.6	295	324	252	1780
F-180LG	22.0	39.3	246	262	261	1480	38.8	199	216	225	1770	35.1	248	272	252	1780
F-200LG	30.0	52	245	281	353	1470	53	195	231	305	1760	47.2	245	292	342	1770
F-200L	37.0	64	245	289	429	1470	64	195	241	371	1750	58	245	305	416	1760
F-225S	45.0	77	243	222	492	1470	77	198	193	422	1770	70	246	241	471	1770
F-225S	55	93	267	261	664	1470	93	217	225	565	1770	84	269	280	630	1770

Motor Frame Size	Pole	6P														
	Power	400V-50Hz					400V-60Hz					440V-60Hz				
	Output power [kW]	Rated Current	Torque max.[%]	Starting Torque [%]	Starting Current [A]	Speed [r/min]	Rated Current	Torque max.[%]	Starting Torque [%]	Starting Current [A]	Speed [r/min]	Rated Current	Torque max.[%]	Starting Torque [%]	Starting Current [A]	Speed [r/min]
F-180LG	15.0	27.9	271	232	179	980	27.3	222	195	154	1180	25.0	276	246	172	1180
F-180L	18.5	36.0	311	274	250	990	33.4	258	234	215	1180	31.3	321	293	240	1190
F-180L	22.0	41.9	261	230	250	990	39.7	216	196	215	1180	36.5	269	246	240	1180
F-200L	30.0	54	252	253	326	980	53	204	212	279	1170	48.4	256	269	313	1170
F-225S	37.0	68	239	241	396	980	66	196	206	339	1170	60	243	258	379	1180
F-225S	45.0	81	235	245	473	970	81	190	208	404	1170	73	237	261	453	1170
F-250S	55	99	242	257	592	970	99	196	219	506	1170	89	244	275	566	1180

*Consult us for confirmed values. Values in the above table are subject to change without notice.

Terminal Box Specifications

Construction of Terminal Box

Standard Motors

3-Phase Motor AF Motor	0.1 ~ 5.5kW × 4P 0.1 ~ 3.7kW × 4P	3-Phase Motor AF Motor	7.5 ~ 15kW × 4P 5.5 ~ 11kW × 4P

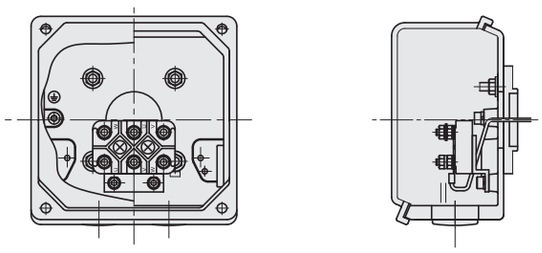

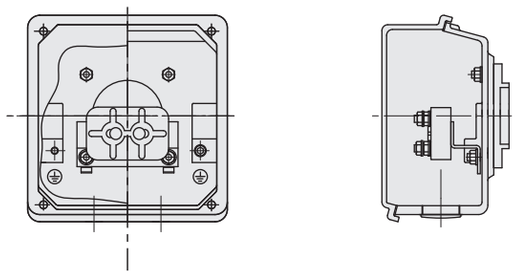

3-Phase Motor AF Motor	18.5 ~ 55kW × 4P 15 ~ 55kW × 4P

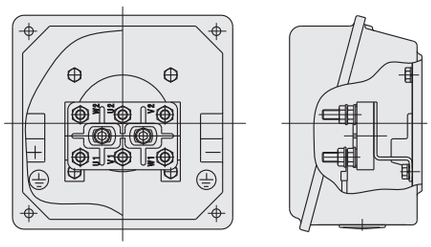

Increased Safety Motors

0.1 ~ 0.4kW × 4P	0.75 ~ 15kW × 4P	18.5 ~ 37kW × 4P 15 ~ 37kW × 6P	45 ~ 55kW × 4P 45 ~ 55kW × 6P

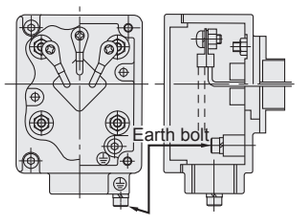

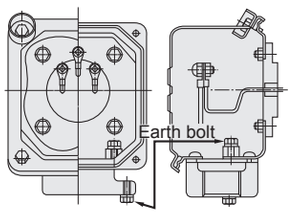

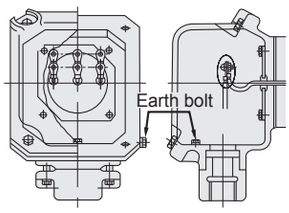

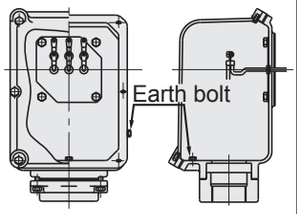

Flame Proof Motors

0.1 ~ 3.7kW × 4P	5.5 ~ 37kW × 4P 15 ~ 37kW × 6P

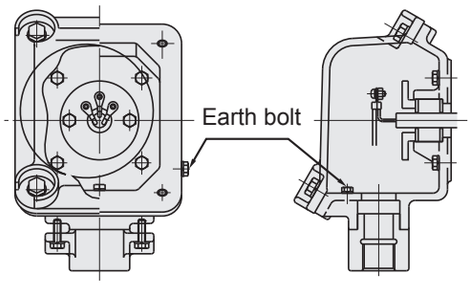

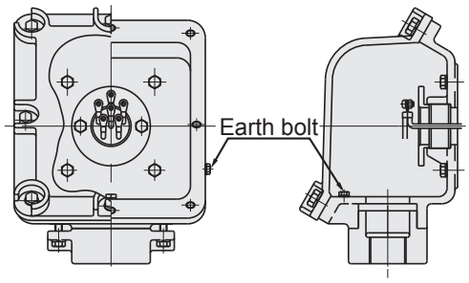

Terminal Box Specifications

Methods for Drawing Lead Wire Outside of Terminal Box.

Standard model	Conduit tube type (Option)	Packing type with threaded conduit joint (Option)	Cable gland for marine use (Option)
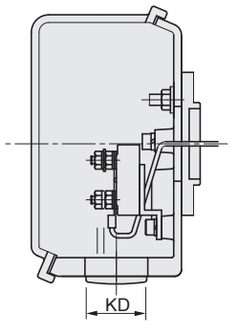	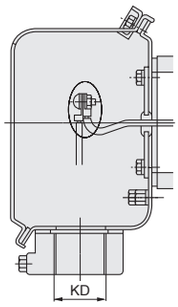	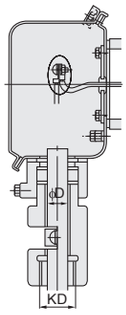	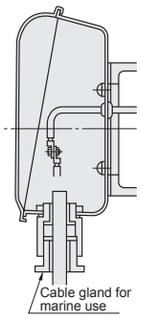

Motor			Standard Model	Option							
				Conduit Tube Type		Packing Type with Thread Conduit Joint				Cable Gland for Marine Use	
Capacity [kW]		P				Standard Size		Available Size		Standard Size	
3-Phase Motor	AF Motor		KD	Standard Size KD	Available Size KD	Thread KD	Cable Dia. ϕD	Thread KD	Cable Dia. ϕD	Thread KD	Cable Dia. ϕD
0.1	-	4	M25	16 (PF1/2)	16 (PF1/2) 22 (PF3/4) 28 (PF1) 36 (PF1 1/4) Note:1)	22 (PF3/4)	12.5	22 (PF3/4) 28 (PF1) 36 (PF1 1/4)	10.0~16.5 12.0~19.5 15.5~23.5	20c	15a~c 20a~c 25a~c
0.2	0.1	4	M25								
0.25	-	4	M25								
0.4	0.2	4	M25								
0.55	-	4	M25	22 (PF3/4)							
0.75	0.4	4	M25								
1.1	-	4	M25								
1.5	0.75	4	M25								
2.2	1.5	4	M25								
3.0	-	4	M25			28 (PF1)	14.5				
3.7	2.2	4	M25								
5.5	3.7	4	M32	28 (PF1)						25c	
7.5	5.5	4	M32		22 (PF3/4) 28 (PF1) 36 (PF1 1/4) 42 (PF1 1/2)		17.5	22 (PF3/4) 28 (PF1) 36 (PF1 1/4) 42 (PF1 1/2)	12.0~16.5 12.0~18.7 15.5~22.7 17.5~27.0		20a~c 25a~c 30a~c
11	7.5	4	M32	36 (PF1 1/4)		36 (PF1 1/4)	19.5			30a	
15	11	4	M32			42 (PF1 1/2)	24				
15	-	6	M40		28 (PF1) 36 (PF1 1/4) 42 (PF1 1/2) 54 (PF2) 70 (PF2 1/2)			28 (PF1) 36 (PF1 1/4) 42 (PF1 1/2) 54 (PF2) 70 (PF2 1/2) Note:2)	13.5~19.0 16.0~23.0 19.5~28.0 23.0~35.7 29.0~45.0	35a	25a~c 30a~c 35a~c
18.5	-	4	M40								
18.5	-	6	M40								
22	15	4	M40								
22	15	6	M40								
30	22	4	M40	54 (PF2)		54 (PF2)	29				
30	22	6	M50								
37	30	4	M50				34				
37	30	6	M50								
45	37	4	M50	70 (PF2 1/2)		70 (PF2 1/2)	44	36 (PF1 1/4) 42 (PF1 1/2) 54 (PF2) 70 (PF2 1/2) 82 (PF3) 92 (PF3 1/2)	20.0~22.7 22.5~29.7 26.8~38.0 38.1~47.0 47.1~53.7 52.5~57.0	55a	35a~c 45a~c 55a~c
45	37	6	M50		36 (PF1 1/4) 42 (PF1 1/2) 54 (PF2) 70 (PF2 1/2) 82 (PF3) 92 (PF3 1/2)						
55	45	4	M50								
55	-	6	M63								

Note: 1. The size of the external lead wire opening of the standard Sumitomo motor is shown above.
2. For the increased safety explosion-proof 45kwx4pole motor, the KD dimensions become PF11/4 (36) - PF31/2(92).
3. Unless otherwise specifically requested, the outdoor type, increased safety explosion-proof motor and for maritime use will be manufactured to the standard dimensions specified above.

Motor Installation Notes

Motor Mounting Space

Refer to dimensions FA or FB listed below when designing a gearmotor mounting space.
(1) Dimensions FA: Required to remove the fan or brake cover without removing the motor from the equipment.
(2) Dimensions FB: Minimum space that is required to enable sufficient ventilation.

Notes: 1. To remove the fan or brake cover, you need to remove the gearmotor from the equipment.
2. The minimum space required when the wall behind the motor fan is sealed.
3. All inverter motors of 30kW or more are ventilated type.

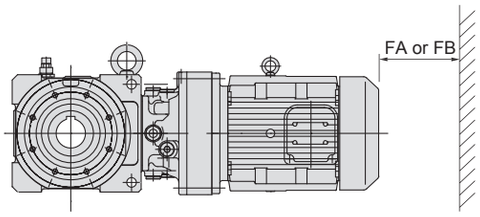

Table 1: FA and FB Dimensions

unit:[mm]

Spec / Capacity	Standard, indoor						With brake, indoor					
	Three Phase Motor		AF Motor		High-Efficiency Motor		Three Phase Motor		AF Motor		High-Efficiency Motor	
	FA	FB	FA	FB	FA	FB	FA	FB	FA	FB	FA	FB
0.1kW×4P	-	-	48	20	-	-	49	-	61	20	-	-
0.2kW×4P	48	20	48	20	48	20	61	20	61	20	61	20
0.25kW×4P	48	20	-	-	-	-	61	20	-	-	-	-
0.4kW×4P	48	20	49	20	49	20	61	20	93	20	93	20
0.55kW×4P	49	20	-	-	-	-	93	20	-	-	-	-
0.75kW×4P	49	20	52	20	52	20	93	20	115	20	115	20
1.1kW×4P	52	20	-	-	56	20	115	20	-	-	121	20
1.5kW×4P	52	20	56	20	56	20	115	20	121	20	121	20
2.2kW×4P	56	20	60	20	60	20	121	20	132	20	132	20
3.0kW×4P	60	20	-	-	60	20	132	20	-	-	132	20
3.7kW×4P	60	20	60	20	60	20	132	20	132	20	132	20
5.5kW×4P	60	20	75	25	75	25	132	20	170	25	170	25
7.5kW×4P	75	25	75	25	75	25	170	25	170	25	170	25
11kW×4P	75	25	130	30	130	30	170	25	220	30	220	30
15kW×4P	130	30	155	30	130	30	220	30	367	30	220	30
18.5kW×4P	155	30	170	30	170	30	367	30	370	30	370	30
22kW×4P	155	30	170	30	170	30	367	30	370	30	370	30
30kW×4P	170	30	140	30	140	30	370	30	295	30	295	30
37kW×4P	230	30	140	30	-	-	445	30	295	30	-	-

Dimensions of Terminal Box Mounting Centers

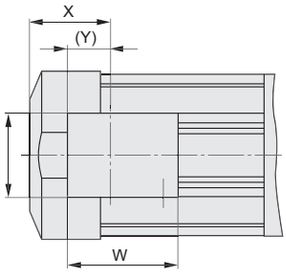

Three phase 0.1kW ~ 0.4kW
AF 0.1kW ~ 0.2kW
High-efficiency 0.2kW

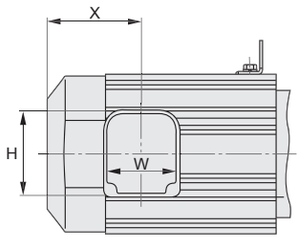

Three phase 0.55kW ~ 55kW
AF 0.4kW ~ 37kW
High-efficiency 0.4kW ~ 30kW

Table 2: Dimensions of Terminal Box Mounting Centers

unit:[mm]

Spec / Capacity	Standard, indoor									With brake, indoor								
	Three Phase Motor			AF Motor			High-Efficiency Motor			Three Phase Motor			AF Motor			High-Efficiency Motor		
	X	W (Y)	H	X	W (Y)	H	X	W (Y)	H	X	W (Y)	H	X	W (Y)	H	X	W (Y)	H
0.1kW×4P	35	125	62	59	125	-	-	-	-	70	125	62	91	125	-	-	-	-
0.2kW×4P	59	125	62	59	125	62	59	125	62	91	125	62	91	125	62	91	125	62
0.25kW×4P	59	125	62	-	-	-	-	-	-	91	125	62	-	-	-	-	-	-
0.4kW×4P	59	125	62	97	125	96	97	125	96	91	125	62	140	125	96	140	125	96
0.55kW×4P	97	125	96	-	-	-	-	-	-	140	125	96	-	-	-	-	-	-
0.75kW×4P	97	125	96	100	125	96	100	125	96	140	125	96	162	125	96	162	125	96
1.1kW×4P	100	125	96	-	-	-	105	125	96	162	125	96	-	-	-	168	125	96
1.5kW×4P	100	125	96	105	125	96	105	125	96	162	125	96	168	125	96	168	125	96
2.2kW×4P	105	125	96	127	125	111	127	125	111	168	125	96	199	125	111	199	125	111
3.0kW×4P	127	125	111	-	-	-	127	125	111	199	125	111	-	-	-	199	125	111
3.7kW×4P	127	125	111	127	125	111	127	125	111	199	125	111	199	125	111	199	125	111
5.5kW×4P	127	125	111	153	170	141	153	179	141	199	125	111	248	179	141	248	179	141
7.5kW×4P	153	170	141	153	170	141	153	179	141	248	179	141	248	179	141	248	179	141
11kW×4P	153	170	141	295	170	141	295	179	141	248	179	141	385	179	141	385	179	141
15kW×4P	295	170	141	340	229	187	295	179	141	385	179	141	550	229	187	385	179	141
18.5kW×4P	340	229	187	340	229	187	340	229	187	550	229	187	550	229	187	550	229	187
22kW×4P	340	229	187	340	229	187	340	229	187	550	229	187	550	229	187	550	229	187
30kW×4P	340	229	188	460	229	188	460	229	188	550	229	188	712	229	188	712	229	188
37kW×4P	430	229	188	460	229	188	-	-	-	645	229	188	712	229	188	-	-	-
45kW×4P	430	229	188	495	229	268	-	-	-	645	229	188	670	229	188	-	-	-
55kW×4P	465	229	268	535	229	268	-	-	-	-	-	-	-	-	-	-	-	-

Motor Brakes

Motor Brake Specifications

Table 1: Electromagnetic Brake Specifications and Applicable Motor Output

Brake Type	Motor Capacity: Three Phase Motor 4-Pole (kW)	Motor Capacity: Three Phase Motor 6-Pole (kW)	Motor Capacity: Inverter AF Motor 4-Pole (kW)	Motor Capacity: High-Efficiency Motor 4-Pole (kW)	Brake Torque (Kinetic Friction) (N·m)	Motion Delay Time [sec]: Normal Brake Action (Simultaneous Shutoff Circuit) 3P Motor High-Efficiency Motor	Motion Delay Time [sec]: Normal Brake Action (Separate Shutoff Circuit) AF Motor	Motion Delay Time [sec]: Fast Brake Action	Allowable Work E_0 (J/min)	Work up to Gap Adjustment ($\times 10^7$J)	Total Work E_1 ($\times 10^7$J)	Gap: Default (Initial Value) (mm)	Gap: Limit Value (mm)	Construction
FB-01A1	0.1	-	-	-	1	0.15~0.2	-	0.015~0.02	1080	2.6	6.7	0.2~0.35	0.5	Fig 1 Page258
FB-02A1	0.2 0.25	-	0.1	-	2		0.08~0.12							
FB-05A1	0.4	-	0.2	0.2	4	0.1~0.15	0.03~0.07	0.01~0.015						
FB-1D	0.55 0.75	0.4	0.4	0.4	7.5	0.2~0.3	0.1~0.15	0.01~0.02	1620	7.0	33.1	0.3~0.4	0.6	Fig 2 Page258
FB-2D	1.1 1.5	-	0.75	0.75	15				2580	6.8	29.5			
FB-3D	2.2	0.75	1.5	1.1 1.5	22	0.3~0.4	0.15~0.2		3360	16.4	53.7		0.7	
FB-5B	3.0 3.7	1.5	2.2	2.2	37	0.4~0.5	0.2~0.25		6900	23.3	178.6	0.4~0.5	1.0	Fig 3 Page258
FB-8B	5.5	2.2	3.7	3.0 3.7	55	0.3~0.4	0.1~0.15							
FB-10B1	7.5	3.7	5.5	5.5	75	1.0~1.1	0.4~0.5	0.03~0.04	10800	94.3	356.3		1.2	Fig 1 Page259
FB-15B1	11	5.5	7.5	7.5	110	0.7~0.8	0.2~0.3							
FB-20	15	7.5 11	11	11 15	150	-	-	0.06~0.14	22440	191.6	1150	0.6~0.7	1.5	Fig 2 Page259
FB-30	18.5	-	-	-	190			0.03~0.11						Fig 3 Page259
	22	15 18.5 22	15	-	220									
	30	-	18.5 22	18.5 22	200									
ESB-250	37	-	30	30	250			0.065	30672	52.0	267	0.7	2.0	Fig 1 Page260
	45	30	37	-	300									
	-	37	-	-	370									

- This table summarizes the specifications for the standard brakes. The specifications for the special brakes may differ from those in this table.
- When the motor begins to be used, the predetermined brake torque may be unable to be reached due to the friction surface. In this case, perform lapping of the friction surface by turning on and off repeatedly with the possible lightest load.
- To improve the stopping accuracy or for the lifter, use a fast brake action.
- The lining friction sound may be generated because of the brake construction while the motor is in operation; however, the brake performance is all right.
- When the motor operates with inverter, the noise level from the brake section may increase for the reason of the brake construction; however, the brake performance is all right.
- When a motor with brake operates at a low speed for a long time, the temperature rise of the brake is larger because the cooling effect of the fan decreases. If you desire to use a motor in this manner, use an inverter motor.
- If the motor is used beyond the allowable work E_0, the brake may be failed (braking failure). By referring to Table 18 on page 21, make sure that the braking work is not larger than the allowable work E_0. (check this also when the motor needs emergency stop.)
- For ESB type brakes, the rectifier is mounted separately from the motor body. Use an HD-110M3. (For the rectifier, refer to Fig. 1 on page 260.) The rectifier is designed for indoor use, and must be protected from water.
- ESB type brake cannot be used in continuous operation when it is mounted in a vertical or inverse vertical position.

When power is supplied to the brake via the rectifier, the voltage and current are as listed:

Table 2: Brake Currents

Brake Type	AC200V/50,60Hz: Brake Voltage V_{dc2} (V)	AC200V/50,60Hz: Brake Current I_{dc2} (A)	AC200V/50,60Hz: Rectifier Current I_{ac1} (A)	AC220V/60Hz: Brake Voltage V_{dc2} (V)	AC220V/60Hz: Brake Current I_{dc2} (A)	AC220V/60Hz: Rectifier Current I_{ac1} (A)	AC400V/50,60Hz: Brake Voltage V_{dc2} (V)	AC400V/50,60Hz: Brake Current I_{dc2} (A)	AC400V/50,60Hz: Rectifier Current I_{ac1} (A)	AC440V/60Hz: Brake Voltage V_{dc2} (V)	AC440V/60Hz: Brake Current I_{dc2} (A)	AC440V/60Hz: Rectifier Current I_{ac1} (A)
FB-01A1	DC90	0.12	0.11	DC99	0.13	0.12	DC180	0.06	0.04	DC198	0.07	0.05
FB-02A1		0.2	0.2		0.2	0.2		0.08	0.07		0.09	0.1
FB-05A1		0.2	0.2		0.2	0.2		0.08	0.07		0.09	0.1
FB-1D		0.2	0.2		0.3	0.2		0.1	0.1		0.2	0.1
FB-2D		0.5	0.4		0.6	0.5		0.3	0.2		0.3	0.3
FB-3D		0.5	0.4		0.6	0.5		0.3	0.2		0.3	0.3
FB-5B		1.0	0.8		1.1	0.9		0.5	0.4		0.6	0.5
FB-8B		1.0	0.8		1.1	0.9		0.5	0.4		0.6	0.5
FB-10B1		1.1	0.9		1.3	1.0		0.6	0.4		0.6	0.5
FB-15B1		1.1	0.9		1.3	1.0		0.6	0.4		0.6	0.5
FB-20 FB-30	DC180/DC90	1.8/0.9	1.8/0.7	DC198/DC99	2.0/1.0	2.0/0.8	DC360/DC180	0.9/0.5	0.9/0.4	DC396/DC198	1.0/0.5	1.0/0.4
ESB-250	DC180/DC90	2.0/1.0	2.0/0.8	DC198/DC99	2.2/1.1	2.2/0.9	-	-	-	-	-	-

- For ESB-250 brakes, only the 200V/50, 60Hz and 220V/60Hz are available. Thus, use a transformer for the 440V/60Hz and 400V/50 power sources. The transformer capacity is 250 to 300VA (secondary voltage: 200 to 220V).
- For FB-20, FB-30, ESB-250 brake voltage Vdc2 and brake current Idc2, the momentary (in over-excitation) / steady-state values are listed. The time of over-excitation is 0.45 to 0.6sec for FB-20 and FB-30, or 0.4 to 1.2sec for ESB25D.

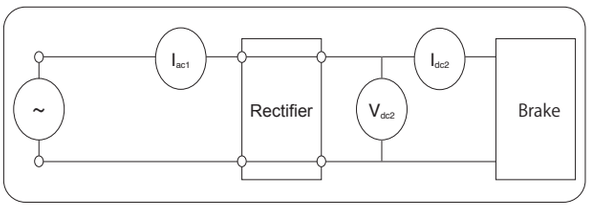

Precautions on Using Fast Brake Action

When using a brake with fast brake action, note the following precautions:

- Connect a varistor (protection device) to the brake in order to protect the fast brake circuit contact from surge voltages generated by braking.
- Connect the wire of the fast brake circuit contact to the secondary of the brake power source contact. Otherwise, the contact may not be protected.
- If an AC electromagnetic switch is used for the fast brake circuit contact, refer to Table 1.

If two or more contacts are required, note the following precautions:

- Connect the electromagnetic contactor contacts in series (refer to Fig. 1).
- Take the shortest way when connecting the varistor (VR) to the brake (refer to Fig. 1).

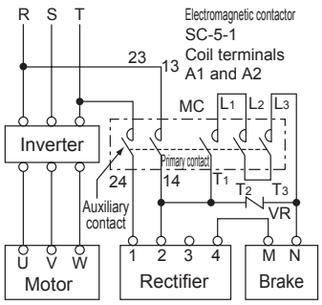

Fig. 1. Connection Example Where Two or More Contacts Are Used with the Fast Brake Action

Table 1 Recommended Part Types for Use of Fast Brake Action

AC Voltage	Brake Type	Recommended Contactor Type: Made by Fuji Electric FA Components & Systems Co., Ltd.		Recommended Contactor Type: Made by Mitsubishi Electric Corporation		Recommended Contactor Contact Capacity (DC-13 Class)		Recommended Varistor (for Contactor Contact): Varistor Type	Maximum Allowable Circuit Voltage	Varistor Voltage	Rated Power
200V 220V	FB-01A1	SC-05	Number of contacts in series 1 (0.7A)	S-N11 or S-N12	Number of contacts in series 1 (1.2A)	DC 110V	0.4A and over	TND07V-471KB00AAA0	AC300V	470V	0.25W
	FB-02A1						0.5A and over				
	FB-05A1										
	FB-1D						0.7A and over	TND10V-471KB00AAA0			0.4W
	FB-2D	SC-05	Number of contacts in series 2 (3.0A)	S-N11 or S-N12	Number of contacts in series 2 (3.0A)		1.5A and over	TND14V-471KB00AAA0			0.6W
	FB-3D										
	FB-5B	SC-05	Number of contacts in series 3 (4.0A)	S-N18	Number of contacts in series 3 (5.0A)		3.0A and over				
	FB-8B										
	FB-10B1	SC-5-1	Number of contacts in series 3 (10A)	S-N20 or S-N21	Number of contacts in series 3 (10A)		5.5A and over	TND20V-471KB00AAA0			1.0W
	FB-15B1										
	FB-20						4.5A and over				
	FB-30										
	ESB-250										
400V 440V	FB-01A1	SC-05	Number of contacts in series 1 (0.25A)	S-N11 or S-N12	Number of contacts in series 2 (0.5A)	DC 220V	0.2A and over	TND10V-821KB00AAA0	AC510V	820V	0.4W
	FB-02A1	SC-05	Number of contacts in series 2 (0.4A)				0.3A and over				
	FB-05A1										
	FB-1D	SC-05	Number of contacts in series 3 (2.0A)	S-N11 or S-N12	Number of contacts in series 3 (2.0A)		0.5A and over	TND14V-821KB00AAA0			0.6W
	FB-2D						1.0A and over	TND20V-821KB00AAA0			1.0W
	FB-3D										
	FB-5B			S-N18	Number of contacts in series 3 (2.0A)		1.5A and over				
	FB-8B										
	FB-10B1	-	-	S-N20 or S-N21	Number of contacts in series 3 (4.0A)		3.0A and over				
	FB-15B1										
	FB-20						2.5A and over				
	FB-30										

- Although the recommended contactor types listed in the table are those made by Fuji Electric FA Components & Systems Co., Ltd. or Mitsubishi Electric Corporation, use of a contactor type made by any other manufacturer is all right, provided that they have the equivalent performance.
- The "Recommended Contactor Contact Capacity" column lists the values for FB-01A1 to -15B assuming the electric switching durability (lifetime) is about 200 million times, or for FB-20 and -30 and ESB-250 assuming the electric switching durability (lifetime) is about 100 million times.
- For the recommended contactors made by Mitsubishi, S-N11 is equipped with one auxiliary contact, and S-N18 is equipped with no auxiliary contact. Note this point if two or more auxiliary contacts are required, for example, for inverter drive. (The other contactors listed in Table EM14 are equipped with two or more auxiliary contacts.)
- Although the recommended varistor types listed in the table are for those made by Nippon Chemi-Con Corporation, use of a varistor made by any other manufacturer is all right, provided that they have the equivalent performance.
- For FB-20 and -30 and ESB-250, the rectifier has a built-in varistor used for protecting the contactor contact.

Why the fast braking circuit shortens the braking time.

The differences between the normal and fast brake action are as shown in diagrams A and B. Diagrams C and D show how current decay proceeds in the normal and fast brake action.

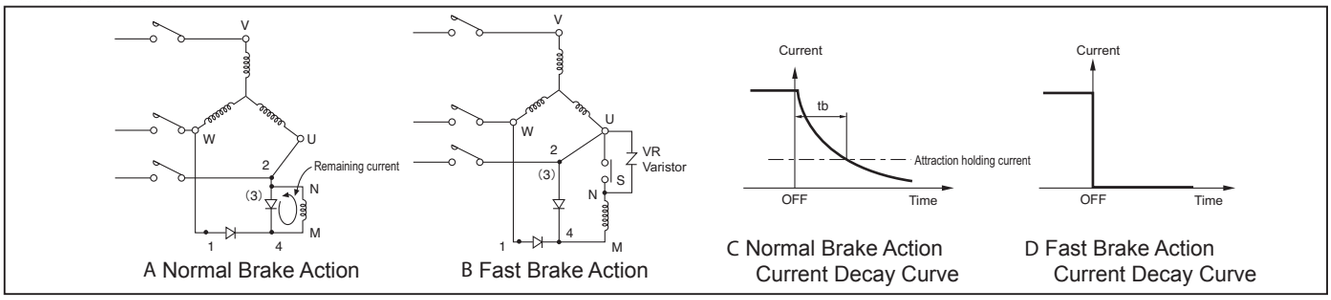

A Normal Brake Action

B Fast Brake Action

C Normal Brake Action Current Decay Curve

D Fast Brake Action Current Decay Curve

The brake coil has inductance L. For the normal brake action (diagram A), the remaining current flows due to the energy saved in L even after the power is turned off. The remaining current decays as shown by the curve in diagram C.
When it is connected for the fast brake action in diagram B and S is released at the same time the power goes off, the closed circuit with the brake coil is not made; the remaining current stops as shown in diagram D.

Therefore, it shortens the braking time by time tb, resulting in fast braking. In summary, the fast brake action circuit stops the remaining current in response to turning on or off the brake coil at the same time when the power goes on or off.
(VR varistor must be used to protect the rectifier and contact S.)

Fig 2 Reference: Circuit in the Rectifier

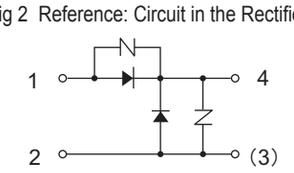

Motor Brakes

Calculation of Braking Work and Braking Time

○Braking Work E_B (J, kgf·m)

The braking work, which varies significantly depending on the speed or load conditions of the motor, can be obtained by using the formulas below:

[International System of Units]

$$E_B = \frac{(J_L + J_M) \cdot N^2}{182} \times \frac{T_B}{T_B \pm T_R} \quad \text{(J)}$$

J_L : Total moment of inertia for motor without brake (converted at motor shaft) [kg·m²]
J_M : Moment of inertia for motor with brake [kg·m²]
N : Motor speed at braking time [r/min]
T_B : Braking torque [N·m]
T_R : Load torque [N·m]

[Gravitational system]

$$E_B = \frac{(GD^2{}_L + GD^2{}_M) \cdot N^2}{7150} \times \frac{T_B}{T_B \pm T_R} \quad \text{(kgf·m)}$$

GD_L^2 : Total GD² for motor without brake (converted at motor shaft) [kgf·m²]
GD_M^2 : GD² for motor with brake [kgf·m²]
N : Motor speed at braking time [r/min]
T_B : Braking torque [kgf·m]
T_R : Load torque [kgf·m]

Sign of T_R +: When turning off the power, the load torque works as the brake (positive load)
-: When turning off the power, the load torque does not work as the brake (negative load)

Obtain the work per minute from both the braking work E_B and the number of braking times per minute (Note), and check that it is equal to or smaller than the allowable work E_0.
In addition, if the brake operates after the speed slows down by the inverter or the like, consider the braking energy generated from high-speed rotation as well, taking into account an emergency stop that is due to a blackout.
If it is used beyond the allowable work, the brake may fail to use due to burning caused by abnormal heating on the brake friction surface, deformation or abnormal abrasion of the brake friction surface, decrease in brake torque, damage of the lining, etc.
The brake allowable work is for checking the temperature rise on the brake friction surface. In addition, consider the gearmotor start and stop frequencies.
Note: If the brake works once every several minutes to several hours, obtain the work assuming that the frequency is 1 time per minute.

○Braking time t_B [sec]

The time of a stop resulting from braking can be obtained by using the formulas below:

[International System of Units]

$$t_B = \frac{(J_L + J_M) \times N}{9.55 \times (T_B \pm T_R)} + t_D \quad \text{(sec)}$$

J_L : Total moment of inertia for motor without brake (converted at motor shaft) [kg·m²]
J_M : Moment of inertia for motor with brake [kg·m²]
N : Motor speed at braking time [r/min]
T_B : Braking torque [N·m]
T_R : Load torque [N·m]
t_D : Operation lag time [sec]

[Gravitational metric system]

$$t_B = \frac{(GD^2{}_L + GD^2{}_M) \times N}{375 \times (T_B \pm T_R)} + t_D \quad \text{(sec)}$$

GD_L^2 : Total GD² for motor without brake (converted at motor shaft) [kgf·m²]
GD_M^2 : GD² for motor with brake [kgf·m²]
N : Motor speed at braking time [r/min]
T_B : Braking torque [kgf·m]
T_R : Load torque [kgf·m]
t_D : Operation lag time [sec]

Sign of T_R +: When turning off the power, the load torque works as the brake (positive load)
- : When turning on the power, the load torque does not work as the brake (negative load)

Lining Lifetime Z_L (times)

The brake lining is worn away by being used. The abrasion significantly varies with the friction surface, slipping velocity, ambient conditions, temperature, and other factors; the accurate lifetime can hardly be calculated. An approximate lifetime (times) can, however, be obtained using the following formula:

$$Z_L = \frac{E_t}{E_B} \quad \text{(times)}$$

E_t : Total work (J)

Special Brake

For the motor with brake of BUDDYBOX gearmotors, the brake torque is set as 150% (or 100% for FB-30/30kW or more) of the motor rating as the standard. However, the brake torque can be changed as requested. Designate the desired option, if any, when making the order.

■ Brake Torque Table

50Hz Motors

Motor Capacity kW	P	Motor Type	Brake Type	Standard Torque N·m	Brake Torque (percentage relative to motor rated torque) (N·m)									
					50	60	70	80	100	120	150	160	180	200
0.1	4	V-63S	FB-01A1	1.0	0.34	0.40	0.47	0.54	0.67	0.81	1.0	1.1	1.2	1.3
0.2	4	V-63M	FB-02A1	2.0	0.67	0.81	0.94	1.1	1.3	1.6	2.0	2.1	2.4	2.7
0.25	4	V-63M	FB-02A1	2.0	0.84	1.0	1.2	1.3	1.7	2.0	2.5	2.7	3.0	3.4
0.4	4	V-71M	FB-05A1	4.0	1.3	1.6	1.9	2.1	2.7	3.2	4.0	4.3	4.8	5.4
0.55	4	V-80S	FB-1D	7.5	1.8	2.2	2.6	3.0	3.7	4.4	5.5	5.9	6.7	7.4
0.75	4	V-80M	FB-1D	7.5	2.5	3.0	3.5	4.0	5.0	6.0	7.5	8.1	9.1	10
1.1	4	V-90S	FB-2D	15	*	4.4	5.2	5.9	7.4	8.9	11	12	13	15
1.5	4	V-90L	FB-2D	15	5.0	6.0	7.1	8.1	10	12	15	16	18	20
2.2	4	V-100L	FB-3D	22	7.4	8.9	10	12	15	18	22	24	27	30
3.0	4	V-112S	FB-5B	37	10	12	15	16	20	24	30	32	36	40
3.7	4	V-112M	FB-5B	37	12	15	17	20	25	30	37	40	45	50
5.5	4	V-132S	FB-8B	55	18	22	26	30	37	44	55	59	67	74
7.5	4	V-132M	FB-10B	75	25	30	35	40	50	60	75	81	91	100
11	4	V-160M	FB-15B	110	37	44	52	59	74	89	110	*	*	*
15	4	G-160L	FB-20	150	50	60	71	81	100	120	150	160	180	200
18.5	4	F-180MG	FB-30	190	62	75	87	99	120	150	190	200	220	-
22	4	F-180MG	FB-30	220	74	89	100	120	150	180	220	-	-	-
30	4	F-180L	FB-30	200	100	120	140	160	200	-	-	-	-	-
37	4	F-200L	ESB-250	250	120	150	170	200	250	300	370	400	450	-
45	4	F-200L	ESB-250	300	150	180	210	240	300	360	450	480	-	-

60Hz Motors

Motor Capacity kW	P	Motor Type	Brake Type	Standard Torque N·m	Brake Torque (percentage relative to motor rated torque) (N·m)									
					50	60	70	80	100	120	150	160	180	200
0.1	4	V-63S	FB-01A1	1.0	0.28	0.33	0.39	0.45	0.56	0.67	0.8	0.89	1.0	1.1
0.2	4	V-63M	FB-02A1	2.0	0.56	0.67	0.78	0.89	1.1	1.3	1.7	1.8	2.0	2.2
0.25	4	V-63M	FB-02A1	2.0	0.70	0.83	0.97	1.1	1.4	1.7	2.1	2.2	2.5	2.8
0.4	4	V-71M	FB-05A1	4.0	1.1	1.3	1.6	1.8	2.2	2.7	3.3	3.6	4.0	4.5
0.55	4	V-80S	FB-1D	7.5	*	1.8	2.1	2.4	3.1	3.7	4.6	4.9	5.5	6.1
0.75	4	V-80M	FB-1D	7.5	2.1	2.5	2.9	3.3	4.2	5.0	6.3	6.7	7.5	8.3
1.1	4	V-90S	FB-2D	15	*	*	4.3	4.9	6.1	7.3	9.2	9.8	11	12
1.5	4	V-90L	FB-2D	15	4.2	5.0	5.8	6.7	8.3	10	13	13	15	17
2.2	4	V-100L	FB-3D	22	6.1	7.3	8.6	9.8	12	15	18	20	22	24
3.0	4	V-112S	FB-5B	37	*	10	12	13	17	20	25	27	30	33
3.7	4	V-112M	FB-5B	37	10	12	14	16	21	25	31	33	37	41
5.5	4	V-132S	FB-8B	55	15	18	21	24	31	37	46	49	55	61
7.5	4	V-132M	FB-10B	75	21	15	29	33	42	50	63	67	75	83
11	4	V-160M	FB-15B	110	31	37	43	49	61	74	92	98	110	*
15	4	G-160L	FB-20	150	42	50	58	67	83	100	130	130	150	170
18.5	4	F-180MG	FB-30	190	51	62	72	82	100	120	150	160	190	210
22	4	F-180MG	FB-30	220	61	73	86	98	130	105	180	200	220	-
30	4	F-180L	FB-30	200	83	100	120	130	170	200	-	-	-	-
37	4	F-200L	ESB-250	250	100	120	140	160	210	250	310	330	370	410
45	4	F-200L	ESB-250	300	130	150	180	200	250	300	380	400	450	-

Consult us for numbers with * mark.

Motor Brakes

Motors with brake Release

■ Operating Procedure of Releasing the FB Brake Manually

To release the brake manually without powering on the motor, operate the brake releaser according to the following procedure:

(1) Remove the brake releasing bolts on the two diagonal positions, and remove the spacers. Then, tighten each of the bolts again using a hexagonal wrench until the brake is released. Do not turn the brake releasing bolt excessively at this time. (Turn it while checking whether the brake has been released.)

(2) If you want to restore the initial state after releasing the brake, reinstall the spacers, removed in Step (1), in the initial position for the safety purpose.

Note: Brake releasers FB-01A1, -02A1, and -05A1 are options. (FB-1D or larger brakes are offered as standard.)

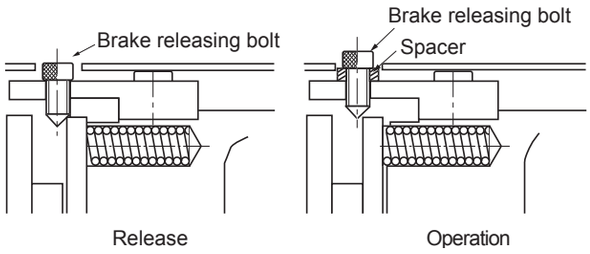

■ Release Lever Specification (Option)

A manual hand release lever, as an option, may be attached to the motor (for brake type FB-01A1 or larger brakes). Designate it, if necessary, when placing the order.

The brake can be released manually only by pushing down the releasing lever.

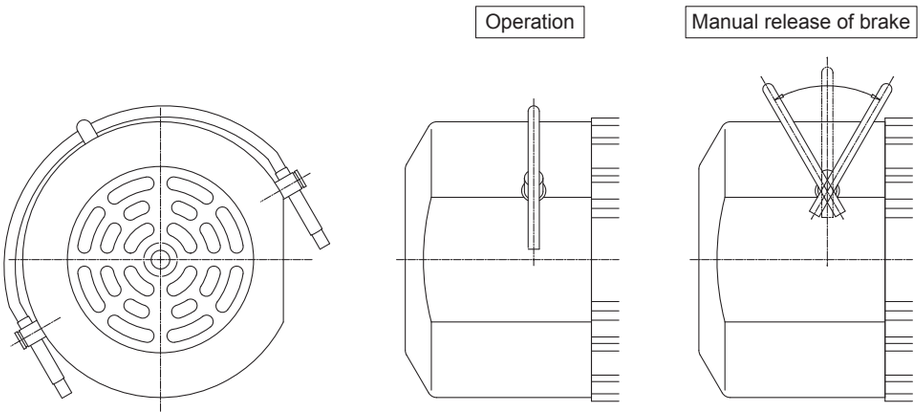

[Operating Procedure of Manual Release]

[1] Pull the releasing lever from the holder, and turn it down toward the load or anti-load side. Then the brake is released.

[2] When the motor is in operation (the brake is actuated), be sure to return the releasing lever to the initial position, and place it in the holder.

* Before starting operate the motor, make sure that the brake is actuated certainly.

Brake Construction Drawings

Fig. 1: FB-01A1, 02A1, 05A1 (Outdoor Type)
(No fan for FB-01A1)

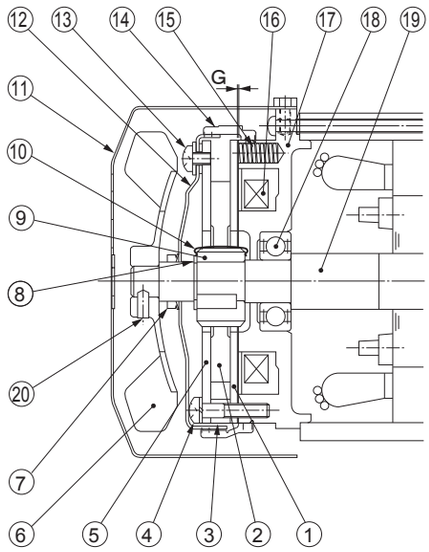

No.	Part Name
1	Armature plate
2	Brake lining
3	Spacer
4	Assembling bolt
5	Brake shoe
6	Fan
7	V ring
8	C type retaining ring
9	Boss
10	Leaf spring
11	Cover
12	Water proof cover
13	Water proof cover mounting bolt
14	Water proof seal
15	Spring
16	Solenoid coil
17	Stationary core
18	Bearing
19	Motor shaft
20	Fan setting bolt

Note: FB-01A1 does not have parts ⑥, ⑦, and ⑳.

Fig. 2: FB-1D, 2D, 3D (Outdoor Type)

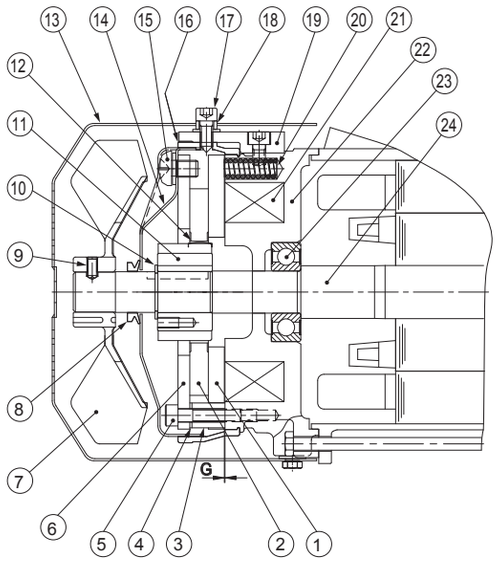

No.	Part Name
1	Armature plate
2	Brake lining
3	Spacer
4	Gap adjusting shim
5	Assembling bolt
6	Brake shoe
7	Fan
8	V ring
9	Fan setting bolt
10	C type retaining ring
11	Boss
12	Leaf spring
13	Cover
14	Water proof cover
15	Water proof cover mounting bolt
16	Water proof seal
17	Release bolt
18	Manual release protection spacer
19	Break release
20	Spring
21	Solenoid coil
22	Stationary core
23	Bearing
24	Motor shaft

Fig. 3: FB-5B, 8B (Outdoor Type)

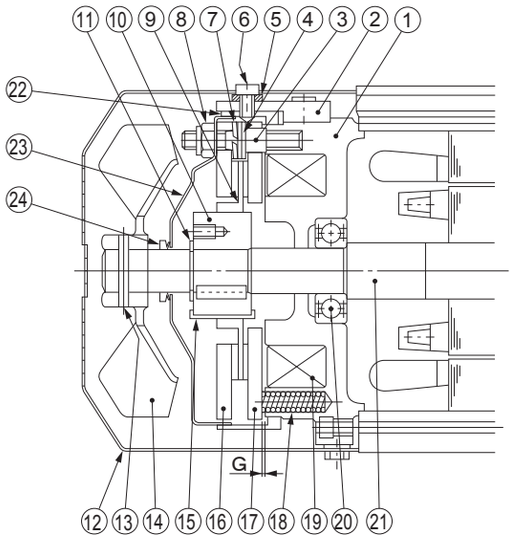

No.	Part Name
1	Stationary core
2	Break release
3	Stud bolt
4	Adjusting washer
5	Manual release protection spacer
6	Brake release bolt
7	Spring washer
8	Gap adjusting nut
9	Brake lining
10	Boss
11	C type retaining ring
12	Cover
13	Spring pin
14	Fan
15	Leaf spring
16	Brake shoe
17	Armature plate
18	Spring
19	Solenoid coil
20	Bearing
21	Motor shaft
22	Water proof seal
23	Water proof cover
24	V ring

Brake Construction Drawings

Fig. 1: FB-10B, 15B (Outdoor Type)

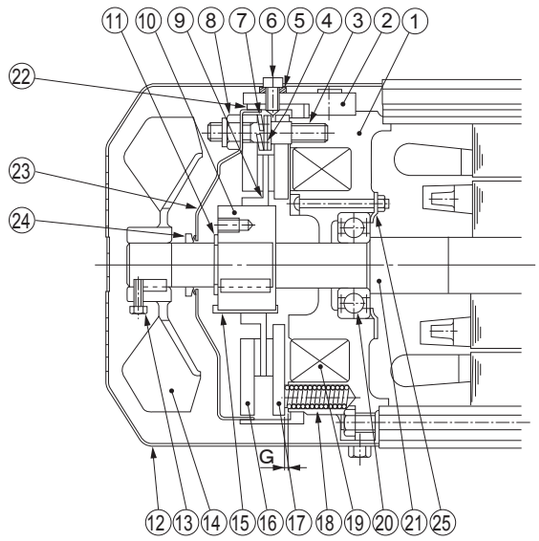

No.	Part Name
1	Stationary core
2	Brake lining
3	Stud bolt
4	Adjusting washer
5	Manual release protection spacer
6	Brake release bolt
7	Spring washer
8	Gap adjusting nut
9	Brake lining
10	Boss
11	C type retaining ring
12	Cover
13	Fan setting bolt
14	Fan
15	Leaf spring
16	Brake shoe
17	Armature plate
18	Spring
19	Solenoid coil
20	Bearing
21	Motor shaft
22	Water proof seal
23	Water proof cover
24	V ring
25	Bearing cover

Fig. 2: FB-20
(Outdoor Type)

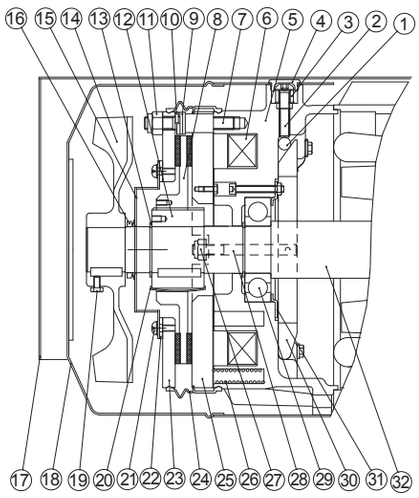

Note: Outdoor cover 17 is optional.

No.	Part Name
1	Roller
2	Brake release bolt
3	Manual release protection spacer
4	Plug
5	Stationary core
6	Electromagnetic coil
7	Stud bolt
8	Brake lining
9	Adjusting washer
10	Spring washer
11	Gap adjusting nut
12	Boss
13	C type retaining ring
14	Fan
15	Water proof cover
16	V ring

No.	Part Name
17	Outdoor cover
18	Cover
19	Fan setting bolt
20	Leaf spring
21	Water proof cover mounting bolt
22	Water proof packing
23	Brake shoe
24	Water proof seal
25	Armature plate
26	Spring
27	Nut
28	Tap-end bolt
29	Bearing
30	Release lever
31	Bearing cover
32	Motor shaft

Fig. 3: FB-30 (Outdoor Type)

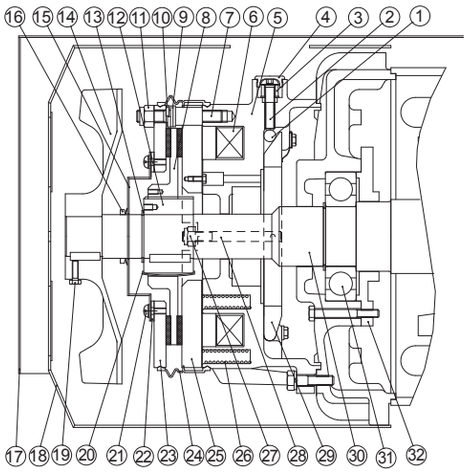

Note: Outdoor cover 17 is optional.

No.	Part Name
1	Roller
2	Brake release bolt
3	Manual release protection spacer
4	Plug
5	Stationary core
6	Solenoid coil
7	Stud bolt
8	Brake lining
9	Adjusting washer
10	Spring washer
11	Gap adjusting nut
12	Boss
13	C type retaining ring
14	Fan
15	Water proof cover
16	V ring

No.	Part Name
17	Outdoor cover
18	Cover
19	Fan setting bolt
20	Leaf spring
21	Water proof cover mounting bolt
22	Water proof packing
23	Brake shoe
24	Water proof seal
25	Armature plate
26	Spring
27	Nut
28	Tap-end bolt
29	Bearing
30	Release lever
31	Bearing cover
32	Motor shaft

Brake Construction Drawings

Fig.1: ESB-250 (Construction Drawing for Indoor type and Outdoor type)

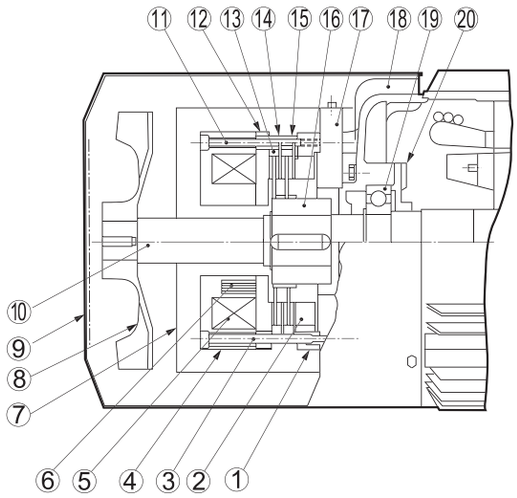

No	Part Name
1	Center Ring
2	Gap Adjusting Screw Ring
3	Setting Bolt
4	Field
5	Coil
6	Release Spring
7	Brake Cover
8	Fan
9	Cover
10	Motor Shaft
11	Tie Up Bolt
12	Armature
13	Inner Disc
14	Outer Disc
15	Spacer Bush
16	Center Hub
17	Brake Adapter Plate
18	Opposite Drive End Bracket
19	Opposite Drive End Bearing
20	Opposite Drive End Bearing Cover

Note: ⑦ Brake cover is not included for indoor type.

Item		Specifications	
Rated Input Voltage		AC200/220V 50/60Hz	
Max. Input Voltage		AC240V 50/60Hz	
Min. Input Voltage		AC170V 50/60Hz	
Standard Output Voltage	Instantaneous Voltage	DC180V (AC200V Input)	
	Steady Voltage	DC90V (AC200V Input)	
Max. Output Current		DC1.8A (Steady Output)	
Overexcitation Time		0.4 ~ 1.2sec	
Insulation Resistance		100M Ω (with 1000V Megger) or more	
Insulation Withstand Voltage		AC2000V 1 or more times	
Max. Frequency	Inching (On-time 1.2 sec or less):		8 cycles/min.
	Constant (On-time over 1.2 sec):		30 cycles/min.
Allowable Ambient Temperature		− 20 ℃ ~ 60 ℃	

Fig.2: Power Unit for ESB-250
HD-110M3 Type

Outline Drawing

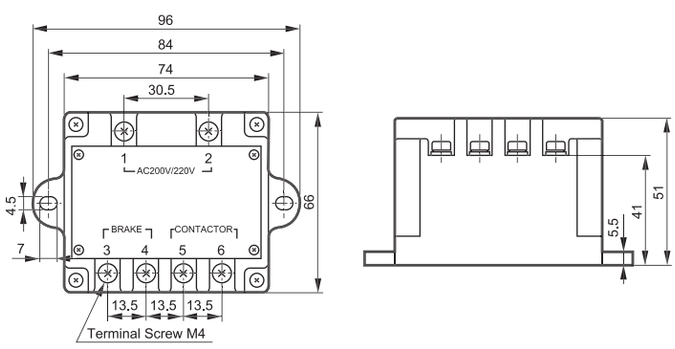

Circuit Diagram

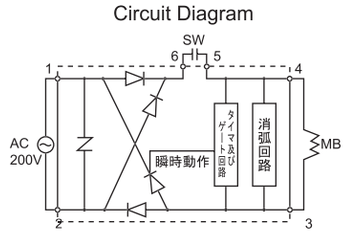

Note: 1. HD-110M3 type power unit is for indoor use. Please install the power unit in a place where it cannot be splashed with water
2. In case that you would use 400V power source, please use a transformer. Secondary output voltage should be 200~220V.

Wiring Diagrams (Standard & IE 2 Motors)

■ Three Phase Induction Motor Wiring Connections (for CE, CCC & GOST-R Motors)

	Winding	Wiring Connection & Terminal Codes	Remarks
Direct Startup	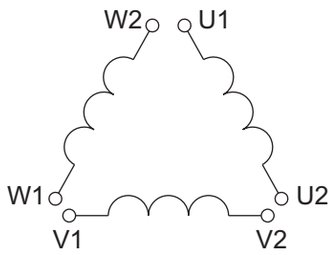	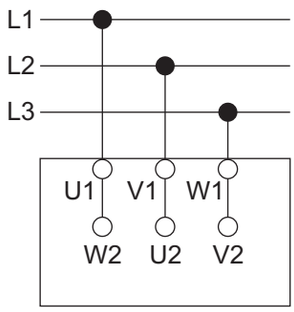	Standard product 0.1~3.7kW×4P or less 220V 50Hz
	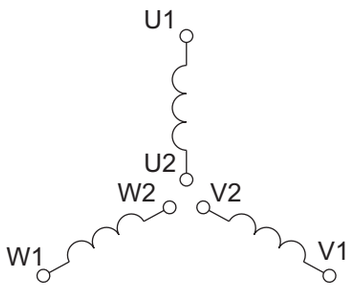	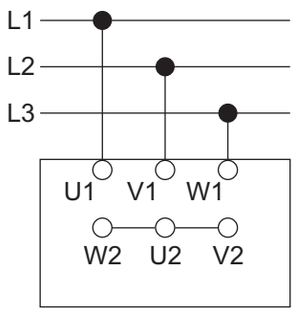	Standard product 0.1~3.7kW×4P or less 380V 50Hz
Y – Δ Startup	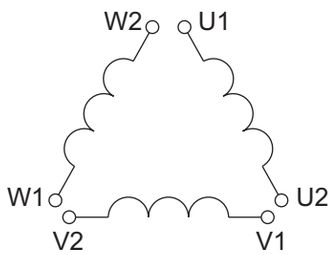	At startup Y connected 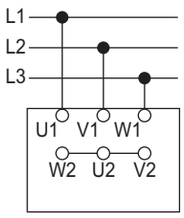 After full acceleration Δ connected 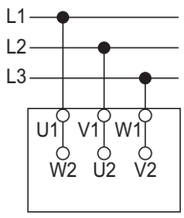	Standard motor 5.5kW×4P or more 380V 50Hz

Note: For JIS, UL, NEMA and CSA Motor Wiring Connection diagrams, consult us.

Wiring Diagrams (Standard, IE2 & AF Motors)

■ Examples of Three Phase Induction Motor Connections (for CE, CCC & GOST-R Motors)

	200V Class	400V Class
3.7kW×4P or less	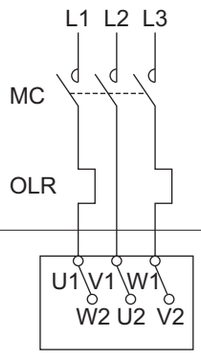	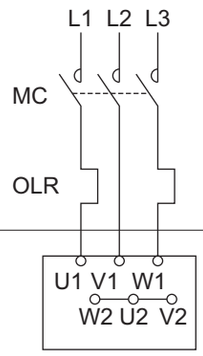
5.5kW×4P or more	400V Class, Direct Startup 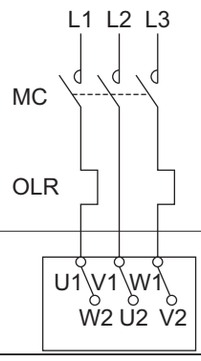	400V Class, 人 – Δ Startup 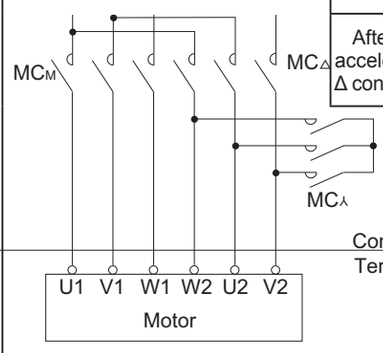

At startup 人 connected	MC_M	ON
	MC_Δ	OFF
	$MC_人$	ON
After full acceleration Δ connected	MC_M	ON
	MC_Δ	ON
	$MC_人$	OFF

■ Examples of Wiring Connections for Inverter Driven Motors (AF Motors)

	200V Class	400V Class
2.2kW×4P or less	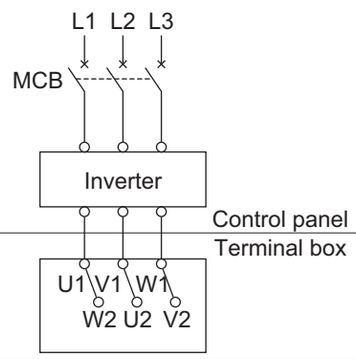	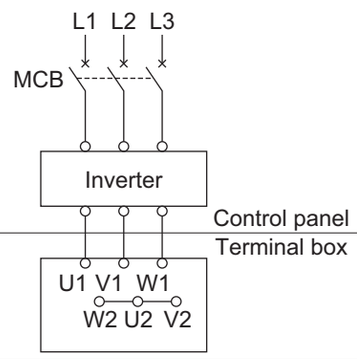
3.7kW×4P or more		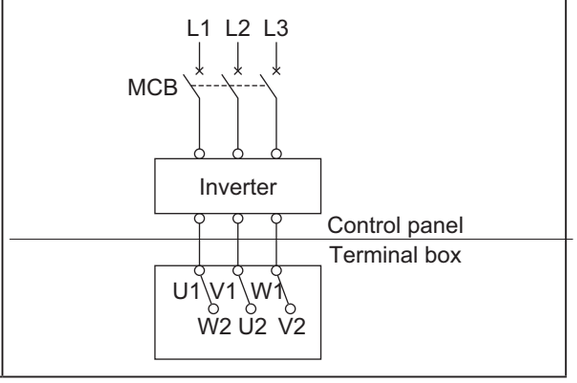

Wiring Diagrams (Motor with Brake)

■ Three Phase Motors with FB Brake: Examples of Wiring Connections for One-Way Rotation

		200V Class	400V Class
3.7kW×4P or less	Normal Brake Action	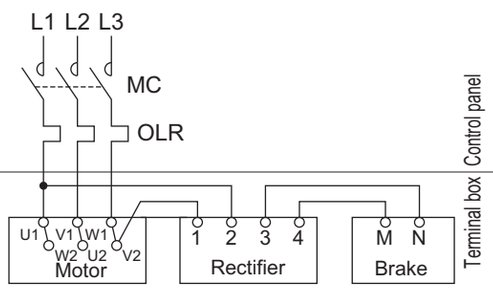	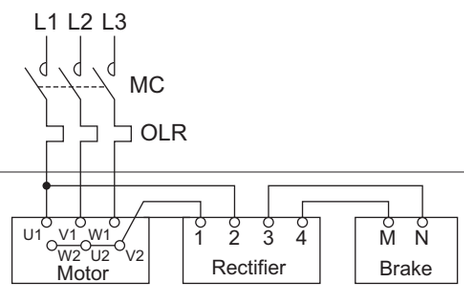
	Fast Braking Action	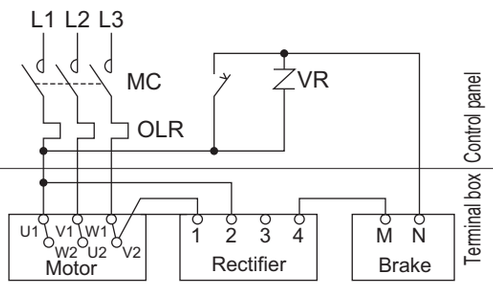	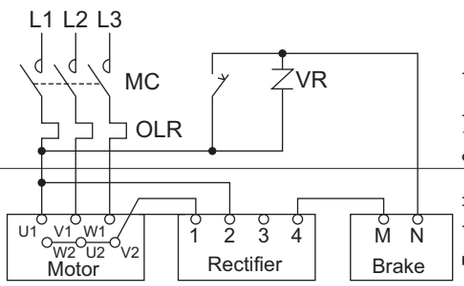
5.5kW×4P ~ 11kW×4P	Normal Brake Action	400V Class, Direct Startup: 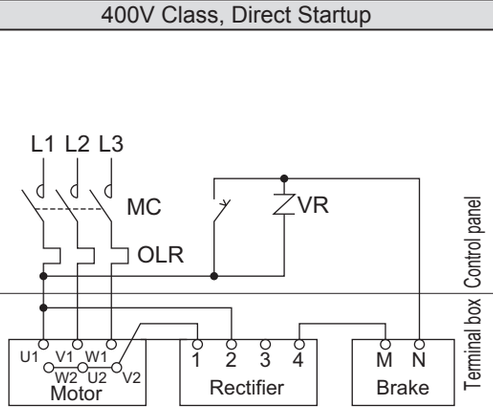	400V Class, ⅄ – Δ Startup: 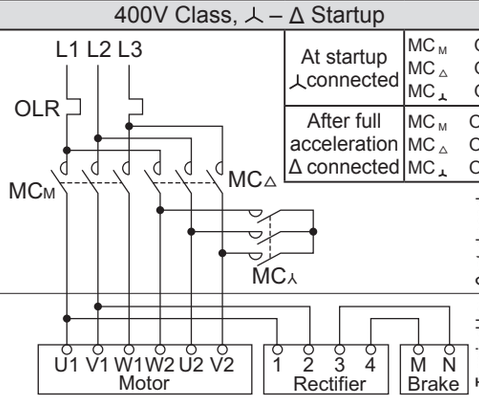
	Fast Braking Action	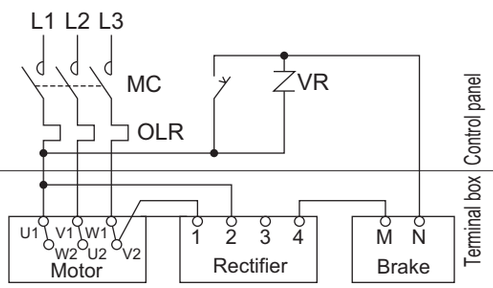	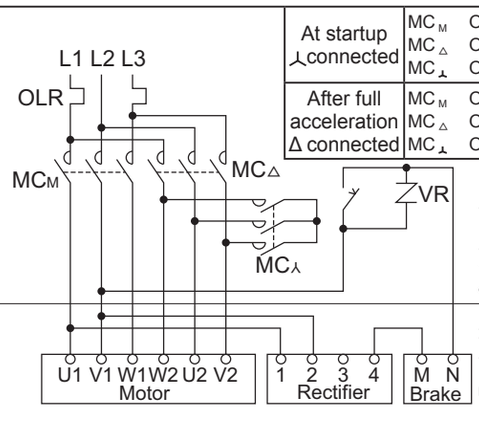

Wiring Diagrams (Motor with Brake)

■ Three Phase Motors with FB Brake: Examples of Wiring Connections for Inverter Drive

		200V Class	400V Class
3.7kW×4P or less	Normal Brake Action	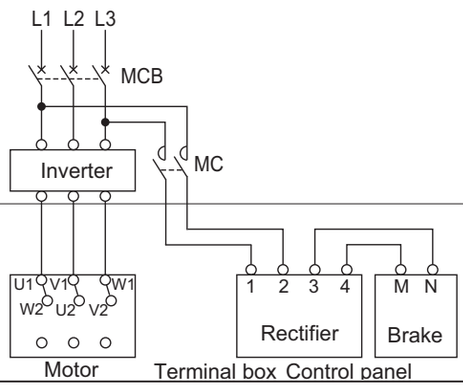	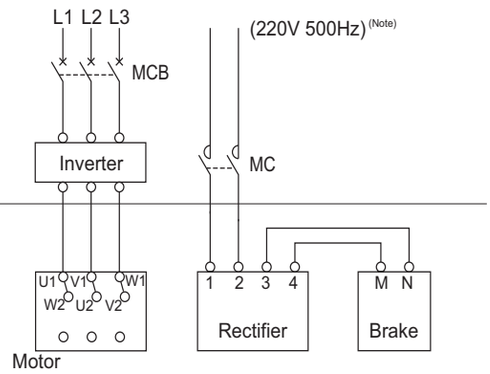
	Fast Braking Action	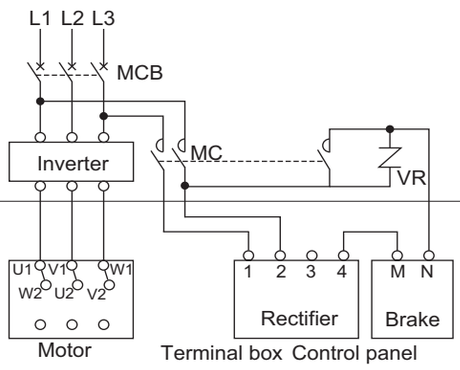	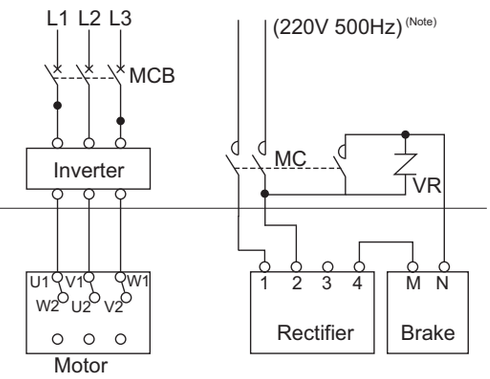
5.5kW×4P ~ 7.5kW×4P	Normal Brake Action		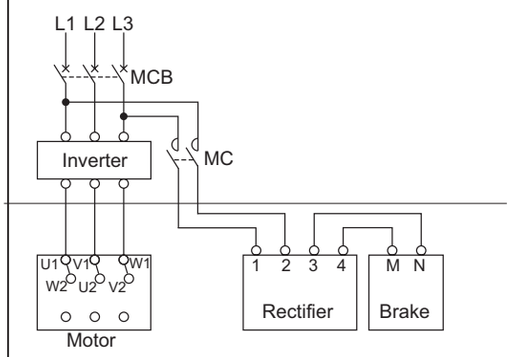
	Fast Braking Action		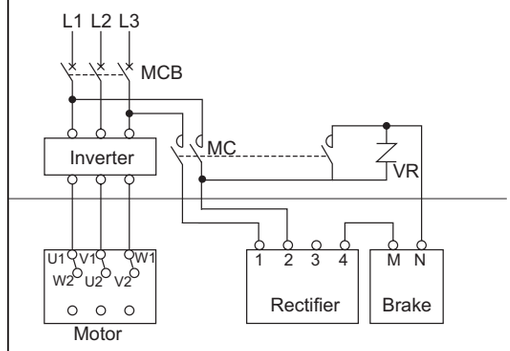

Note: The 3.7kW×4P (or 2.2kW×4P for inverter motor) or smaller motors with brake are specified to be equipped with a brake operating with power of 220 or 230V, thus a power source of 220 or 230V must be connected to the brake during inverter operation mode. Note that the brake coil will be burnt if the brake is connected to a power source of 380 or 400V. An optional brake for 380 or 400V is also available. Designate it if you need it.

Wiring Diagrams (Motor with Brake)

■ Motors with FB Brake: Examples of Wiring Connections for One-Way Rotation (Fast Brake Action)

		400V Class, Direct Startup	400V Class, ⅄ – Δ Startup
15kW×4P ~ 30kW×4P	Fast Braking Action	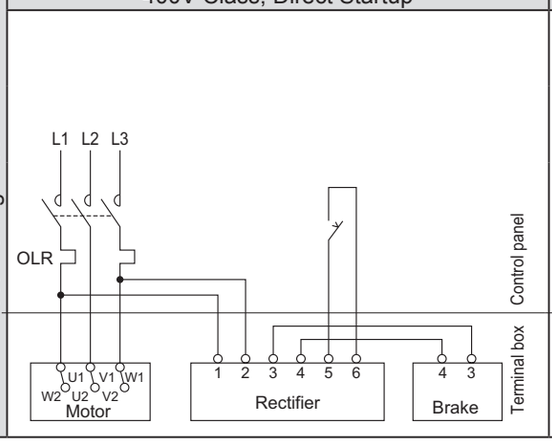	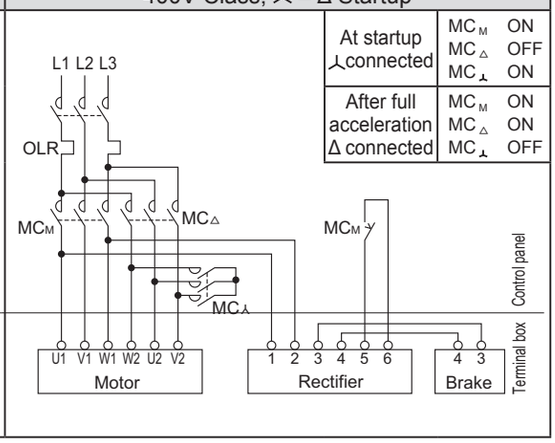

■ Motors with FB Brake: Examples of Wiring Connections for Forward/Reverse (Fast Brake Action)

		400V Class, Direct Startup	400V Class, ⅄ – Δ Startup
15kW×4P ~ 30kW×4P	Fast Braking Action	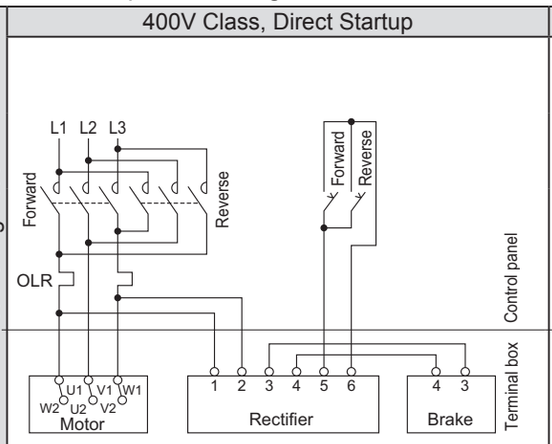	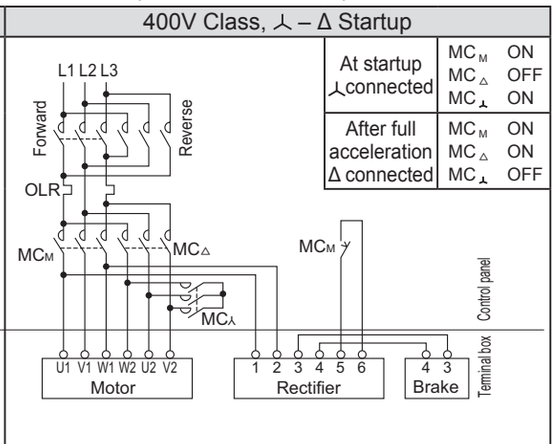

Wiring Diagrams (Motor with Brake)

■ Motors with FB or ESB Brake: Examples of Wiring Connections for Inverter Drive (Fast Brake Action)

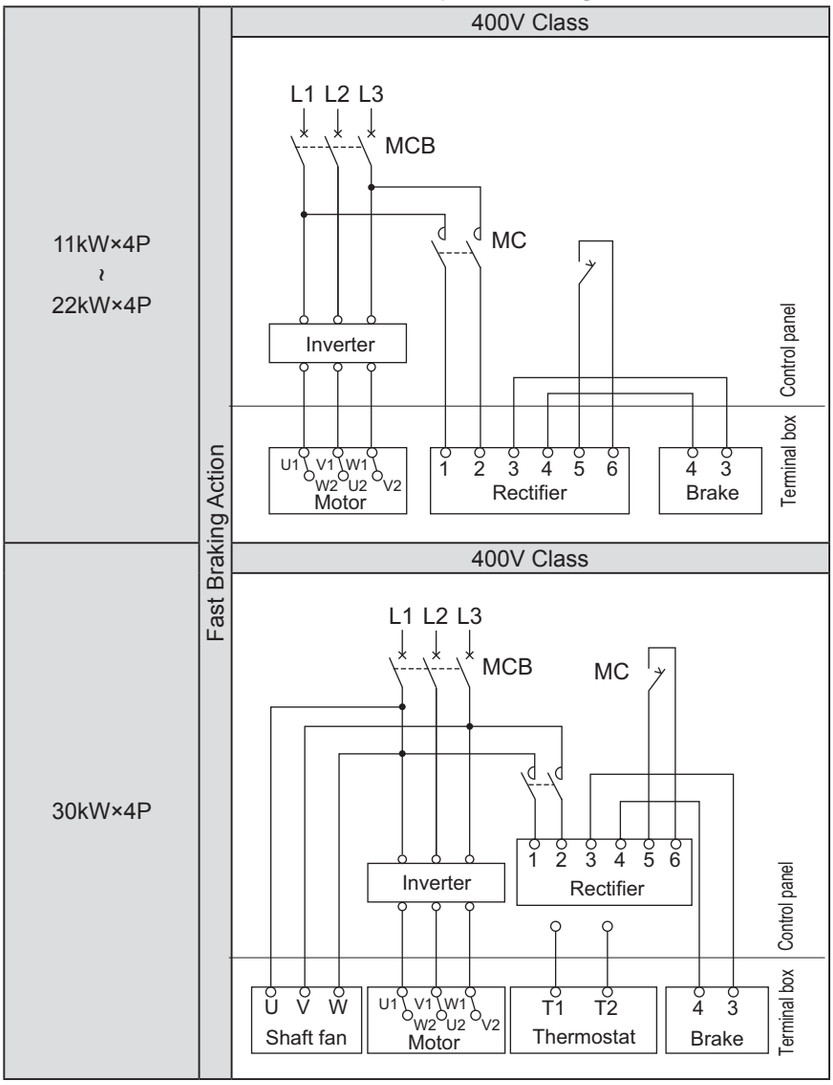

Notes on Inverter Driven Motors

1. Inverter Drive Precautions

1. Constant Torque Operation

Constant torque operation requires AF motors dedicated for the inverter drive. Consult us especially whenever the output is in the frequency range lower than 6Hz.
The sensorless mode of Sumitomo inverter HF-520 or HF-430α permits constant torque operation of general-purpose motors at 22kW or less as detailed on the next page.

2. Operation in Frequency Range Exceeding the Base Frequency (60Hz)

In the frequency range exceeding the base frequency, the motor operates in constant power operation mode. Therefore, the torque will decrease as the speed increases. Select a motor capacity according to the machine load characteristics. (Refer to Fig. 2 below)
The output torque will be lowered relative to that at the standard base frequency 60Hz, also if the motor operates in constant power operation mode with the V/f setting that is based on a base frequency beyond 60Hz.
Such adjustment may cause insufficient torque at a low frequency or during startup.
Do not change the base frequency setting, except for reduction load characteristics.

3. V/f Motor Operation of General-Purpose Inverter

For multiple operation of motors or V/f operation with an inverter that has no sensorless function, it is necessary to adjust the boost value in compensation for the startup torque and slow-speed torque. The standard factory settings are usually set before shipment from the manufacturer's factory, but overcurrent may result depending on the load or acceleration/deceleration conditions. In this case, change the setting appropriately as follows:

a. For a small capacity motor with a small load, a large boost setting may cause overexcitation of a motor, leading to overcurrent. In this case, decrease the amount of boost to come to the normal value.
b. If a motor with a large load easily causes tripping due to overcurrent during startup or slow-speed operation, increase the boost to lower the current value. If no improvement results after the boost adjustment, it is necessary to examine the motor capacity.

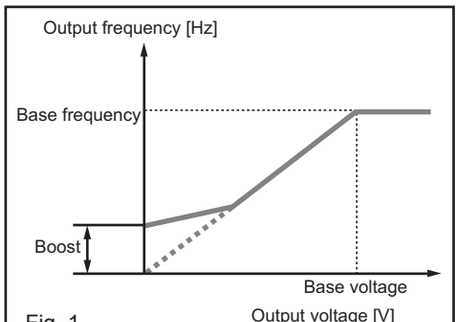

Fig. 1

4. Operation by Sensorless Vector Inverter

Some state-of-the-art high-performance inverters are equipped with a sensorless vector operation function, which is basically enabled only when a motor and an inverter are operated in one-to-one correspondence, and thus unsuitable for multiple operation or pole-change operation.
Because inverters using the auto tuning method generally regulate the motor characteristics, they do not require such adjustment as in V/f operation. Because the vector operation is carried out on the basis of the motor data read by the inverter, and operation is controlled instantaneously in accordance with the load condition to continue optimal operation.
If the wiring distance between the motor and inverter is long (20 m or more), compensation may be necessary according to the drop in line impedance. Select sufficiently thick cables for long distance wiring. Consult us for long distance wiring.

5. Motor Output Torque Characteristics

○ Total output/torque characteristic curve resulting when an AF motor and a V/f control type inverter are operated in combination

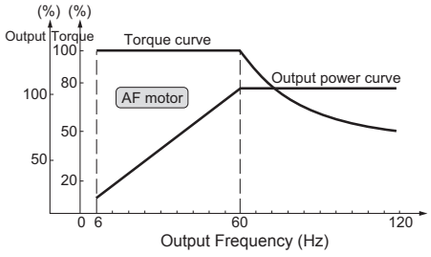

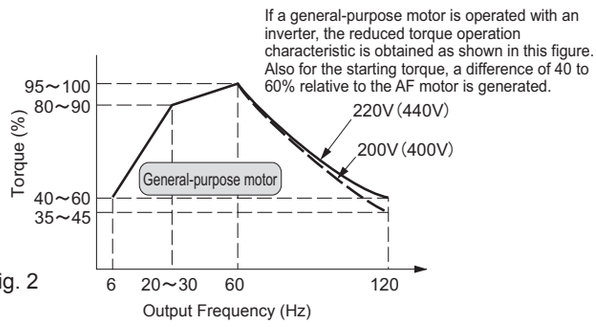

Fig. 2

Note: When an axial fan type is used, constant torque operation is available at 1Hz or more.

6. About Motor Temperature Rise

When a general-purpose motor is combined with an inverter for various-speed operation, the motor temperature rise may be slightly greater than if the motor is operated with a commercial power supply. The possible causes of this are as follows:
Influence of output waveform: Unlike a commercial power supply, the output waveform of an inverter is not a complete sine wave but includes harmonics; therefore, motor loss will increase, resulting in slight increase in the temperature.
Decrease in motor cooling effect during slow-speed operation:
A motor is cooled by a shaft driven fan. Therefore, when the motor speed is decreased by an inverter, the quantity of cooling air decreases, reducing the cooling effect.

2. Inverter Drive of General-Purpose Motors

Operation with the following characteristics is available when Sumitomo inverter HF-520 or HF-430α series is used for sensorless control in combination with a Sumitomo general-purpose motor (22kW or less).

A combination with a motor of standard frame size can be used for applications where an AF motor (inverter motor) with a reducer of a larger frame size has conventionally been used.

Notes: 1. To select the combination with CYCLO, examine the lubrication method and the torque that are used for slow speed operation or constant power operation. When placing the order, be sure to specify that inverter operation is desired.
2. Inverter operation of 400V class requires insulation selection. Consult us for details.
3. Consult us if a motor with brake is to be operated for a long time at a slow speed, because the cooling effect of the fan will decrease, resulting in substantial rise in the brake temperature.
4. Consult us if a general-purpose motor is to be used in constant torque operation mode under V/F control.
5. Consult us if Sumitomo inverter SF-420 series is to be used.
6. In case that the general purpose motor is controlled by the inverter, auto-tuning function should be used.

kW	Motor frame size		Applicable frequency	Constant torque range	Constant output range	Applicable inverter
0.1	V-63S	E	6~120Hz	6~60Hz (1:10)	60~120Hz	HF-320α Sensorless control
0.2	V-63M					
0.4	V-71M			20~60Hz (1:3)		
0.75	V-80M	B				
1.5	V-90L					
2.2	V-100L					
3.7	V-112M					
5.5	V-132S	F				HF-430 Sensorless control
7.5	V-132M					
11	V-160M					
15	G-160L					
22	F-180MG		6~110Hz		60~110Hz	

Output Torque Characteristics in Sensorless Mode Operation of HF-520 or HF-430α

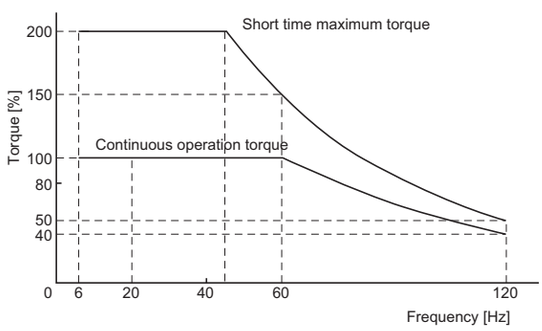

For 0.1~0.2kW

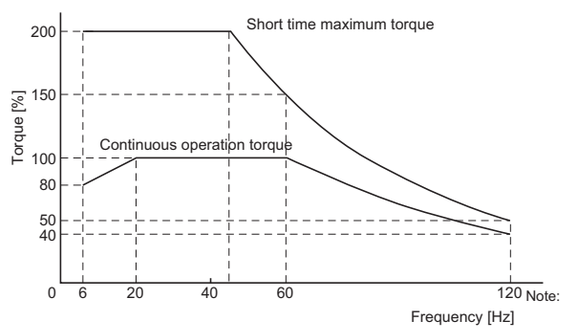

For 0.4～22kW

Note: The maximum output frequency is 110Hz for a 22kW motor.

● Combination – The rated output torque is 100% torque when the motor is running at 60Hz.

Continuous operation torque: Allowable torque value that enables continuous operation within motor temperature rise which is fulfilling the standards.

Short-time maximum torque: Maximum torque that the motor can emit while being operated with the inverter. The motor can be operated for a short time (1 minute) at this torque value.

Use an AF motor (inverter motor) if the constant torque is required for the capacity of 30kW or more.

Notes on Protection and Cooling

Classification is made by combination of
No. 1 Symbol: Type of protection of humans and solid foreign substances and
No. 2 Symbol: Type of protection against water permeation.

Protection Method of Motors

No. 1 symbol / No. 1 type \ No. 2 symbol / No. 2 type	0 Non-protected type	2 Drip-proof type	3 Spray-proof type	4 Splash-proof type	5 Water-jet-proof type	6 Sea-wave proof type	7 Immersion-proof type	8 Submersible type
0 (Non-protected type)	IP00			×	×	×	×	
1 (Semi-protected type)	IP10	IP12S			×	×	×	
2 (Protected) type	IP20	IP22S	IP23S	IP24	×	×	×	
4 (Totally enclosed type)	×			IP44	IP45			
5 (Dust-proof type)	×			IP54	IP55	IP56		
6 (Full dust-proof type)	×				IP65			

Notes: 1. The × mark denotes difficulty in forming the combination.
2. The thick framed cells ▭ denote the range of Sumitomo standard products.
3. Consult us if the product may be directly exposed to the strong rain and wind or splashed with water (because the protection type has to be considered).
4. The indoor and outdoor motors differ in construction although the standard motor protection types are IP55 for both the indoor and outdoor types. If your motor is to be installed outdoors, designate a motor of outdoor type.

Class of No. 1 Symbol

Type	Symbol	Description
Non-protected type	0	Constructed without special protection against human contact and penetration of solid foreign substances.
Semi-protected type	1	Constructed to prevent inadvertent contact with rotating and conductive parts inside the machine, by hand or other critical parts of the human body. Constructed to prevent penetration of solid foreign substances over 50mm in diameter.
Protected type	2	Constructed to prevent contact with rotating and conductive parts inside the machine, by hand or other critical parts of the human body. Constructed to prevent penetration by solid substances over 12mm in diameter.
Totally enclosed type	4	Constructed to prevent contact with the rotating and conductive parts inside the machine, by tools, electric wires, etc., with minimum width and thickness over 1mm. Constructed to prevent penetration of solid foreign substances over 1mm diameter. However, water drainage outlet and exhaust outlet may be of Symbol 2 construction.
Dust-proof type	5	Constructed to prevent contact with rotating and conductive parts inside the machine by any foreign object. Constructed for maximum protection against dust particles penetration, but such penetration will not interfere with normal operation.
Full dust-proof type	6	Constructed to prevent dust from entering the inside.

Class of No. 2 Symbol

Type	Symbol	Description
Non-protected type	0	Constructed without special protection against water permeation.
Drip-proof type	2	Constructed to prevent harmful effect from dripping water falling from within 15-degree direction from the vertical.
Splash-proof type	3	Constructed to prevent harmful effect from dripping water falling from within 60-degree direction from the vertical.
Splash-proof type	4	Constructed to prevent harmful effect from dripping water falling from any direction.
Water-jet-proof type	5	Constructed to prevent harmful effect from spray from any direction.
Sea-wave proof type	6	Constructed to prevent harmful effect from strong spray from any direction.
Immersion-proof type	7	Constructed to submerge into water of prescribed depth and time, but not to have any harmful effect in spite of water permeation.
Submersible type	8	Constructed to assure normal operations under water.

Example: I P □ - 5 4 □

W · E · C

SM

→ Type of protection against water permeation: Splash-proof type

→ Type of protection against bodily injury and solid foreign substances penetration: Dust-proof type

→ IEC: Abbreviation of standard name

S Test of type of protection against water permeation conducted when the motor stops
M Test of type of protection against water permeation conducted when the motor is operating
If neither S nor M is shown: Test conducted when the motor is at a stop and when it is operating
W Outdoor type (used only for outdoor open type)
E Explosion-proof type
C Type of protection against other harmful atmosphere

Cooling Method

Enclosure	JIS Standards	IEC Standards
Totally enclosed, non-ventilated (TENV)	IC410	IC410
Totally enclosed, fan-cooled (TEFC)	IC411	IC411
Totally enclosed, air over (TEAO)	IC416	IC416

Global Voltage and Power Supply

■ Global Motor Standards and Power Source Conditions

Country/Area		Frequency	Voltage (three phase)	Applied Standards for Sumitomo Products
Japan		50Hz/60Hz	200/220/400/440V	JIS
North America	USA	60Hz	208/230/460 (480) V	UL
	Canada		208/230/460/575V	CSA
South America	Brazil		220V	Consult us.
Asia	India	50Hz	240/415V	CE
	Indonesia		380V	
	Korea	60Hz	220/380V	JIS
	Singapore	50Hz	415V	CE
	Thailand		220/380V	
	Taiwan	60Hz	200/220/380V	
	China (Hong Kong)	50Hz	220/380V (380V in Hong Kong)	CCC/CE
	Bangladesh		415V	CE
	Philippines	60Hz	220/440V	
	Vietnam	50Hz	380V	
	Malaysia		415V	
Oceania	Australia		240/415V	
	Guam	60Hz	230/415V	
	New Zealand	50Hz	415V	
Europe	United Kingdom		415V	
	Italia		380V	
	Austria		400V	
	Netherlands		400V	
	Greece		400V	
	Switzerland		400V	
	Sweden		400/690V	
	Spain		220/380V	
	Denmark		400V	
	Germany		400V	
	Norway		380V	
	Hungary		380V	
	Finland		400V	
	France		400V	
	Bulgaria		400V	
	Belgium		380V	
	Poland		380V	
	Portugal		400/480V	
	Romania		380V	
	Luxembourg		400V	
	Russia		380V	GOST-R

* Even in the same country, the voltage in a certain region or city may differ from the above.

Warranty Standard

Warranty Standard

Warranty Period	The warranty period shall be 18 months from the date of shipment from the factory or 12 months from the start date of operation of the product, whichever is shorter (this shall apply only to new products).
Warranty Condition	In the event that the Product fails during the Warranty Period when it is properly installed and combined with other equipment, maintained as specified in the maintenance manual, and properly operated as specified in the catalog or as otherwise agreed upon, the Seller will provide, at its sole discretion, appropriate repair or replacement of the Product free of charge, except as stipulated in the "Warranty Exclusions" as described below. However, if the Product is combined with other equipment, the Seller shall not indemnify the Buyer from any costs of removal or reinstallation of the Product from or to the appropriate equipment, or other incidental costs (such as construction cost and cost of transportation) related thereto, any lost opportunity, any profit loss or other consequential damages incurred by the Buyer.
Warranty Exclusions	Notwithstanding the above warranty, the following shall be warranty exclusions: 1. Any failure attributable to improper installation of the Product or improper combination with other equipment 2. Any failure that may occur due to the cause that the Product is maintained in an insufficient manner and handled in an incorrect manner (for example, if it is not stored as specified in the storage procedure manual established by the Seller) 3. Any failure attributable to any operation not conforming to the specification, or any other operation conditions or state unknowable to the Seller, or any failure attributable to use of a lubricant other than the Seller-recommended ones 4. Any failure attributable to a problem or special specification of the equipment with which the Buyer combined the Product 5. Any failure attributable to a modification or restructuring made, by the Buyer, to the Product 6. Any failure attributable to a problem of a component or part supplied from or designated by the Buyer 7. Any failure attributable to an earthquake, fire, flood, salt damage, gaseous damage, lightning strike, or any other reasons beyond the control of the Seller 8. Warranty concerning a naturally worn and torn , abraded, or degraded consumable part (such as a bearing or oil seal) that may result after normal use of the Product 9. Any failure that is caused for any of the other reasons not attributable to the responsibilities of the Seller

SAFETY PRECAUTIONS

⚠ SAFETY PRECAUTIONS

- Strictly Observe the safety rules required for the installation site and the equipment used, including the Iindustrial Safety and Health Law, Technical Standard for Electric Facilities, Extension Rules, Plant Explosion guidelines, and Building Standards Law.
- Read the maintenance manual before use. Request one from the distributor or our sales department to send it, if it is not handy. The maintenance manual must reach every end user of the product.
- Select an appropriate product matching the operating environment and your application.
- If you are using the product for any equipment that may cause severe personal injury or severe loss of the facilities when it fails (e.g., transporting or elevating system for personnel), install a protection device on the equipment for the safety purpose.
- In an explosive atmosphere, use an explosion proof motor that has a specification adaptable to use in hazardous locations.
- If the motor is being driven with a 400V Class inverter, install a suppression filter or reactor on the inverter, or use an insulation enhanced motor.
- When a 400V Class standard motor is being inverter driven, a high carrier frequency type (e.g., IGBT) inverter with high input voltage or, for long wiring distance, insulation for surge voltage must be considered. Consult us for details. (The inverter motors are of insulation-enhanced type.)
- Specifically for oil-sensitive applications such as food processing and clean room, install an oil pan or other devices to prevent oil or grease leakage, which may occur due to failure or termination of service life.

CAUTIONS ON APPLICATION OF SPECIAL MOTORS

- Explosion proof motor: No increased safety motor can be inverter driven. If you need to inverter drive an explosion proof motor, you have to use a flameproof motor for combination. Consult us for details.
- Motor with brake: An independent power source for the brake must be provided. This power source must always be connected to the primary of the inverter, and the inverter output must be shut off during actuation of the brake. The motor depending on the brake type may rattle in the low-speed area due to running.