Sumitomo Drive Technologies

HYPONIC® Drive
PREST® NEO
Bevel BUDDYBOX® H Series

Premium Efficiency IE3 Catalogue

Sumitomo Heavy Industries, Ltd.

No. SCA/AP/GM/ IE3.01/2019

Contents

A Overview

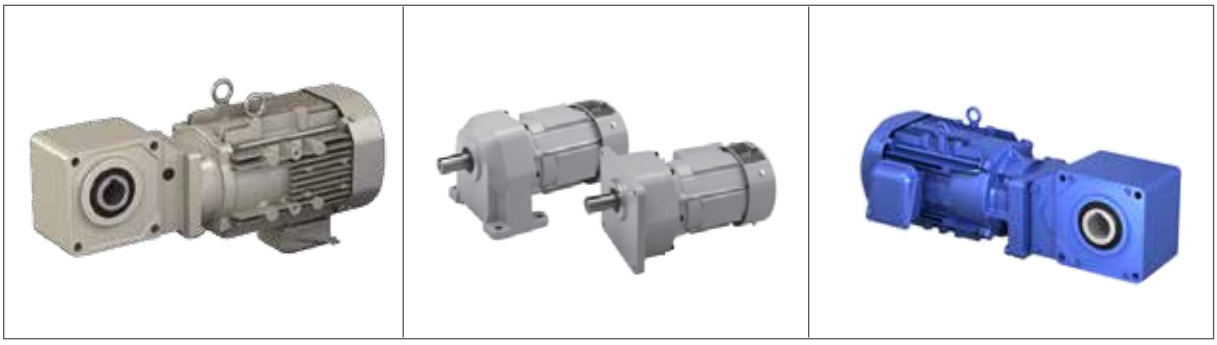

HYPONIC® Drive

B Gearmotor - Selection

C Gearmotor - Dimension drawing

D Technical data

PREST®NEO

E Gearmotor - Selection

F Gearmotor - Dimension drawing

G Technical data

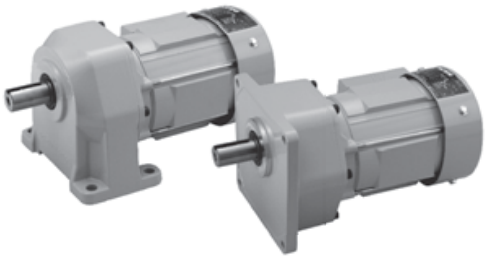

Bevel BUDDYBOX®
H series

H Gearmotor - Selection

I Gearmotor - Dimension drawing

J Technical data

K Motors & Brakes

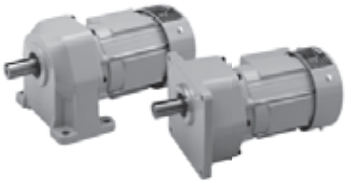

Trusted and proven lineup

Product Lineup

Gearmotor and reducer

6W 40W 90W 0.1kW 0.2kW 2.2kW 3.7kW 5.5kW 30kW 55kW 132kW 1000kW

Coaxial

ALTAX® NEO

Small gearmotor which adopts the speed reducer of CYCLO® Drive.
It can be designed freely in accordance with the purpose because the minimum coaxial flange dimensions in the industry and the mounting direction is free.

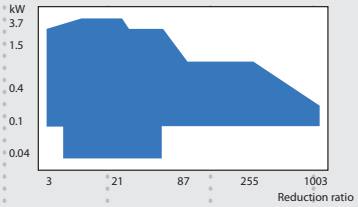

CYCLO® Drive

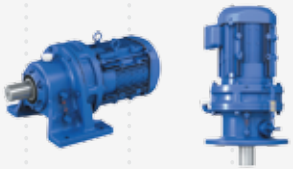

Synonymous with the drive with the delivery track record of 10 million units.

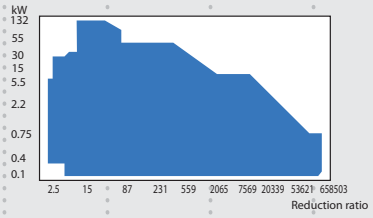

Compower® Planetary Gear Speed or Geared Motor

Compact in the diameter direction in spite of high torque.
The unique idea and mechanism greatly shortened the total length.
- Rated torque: 0.46 to 736kN·m

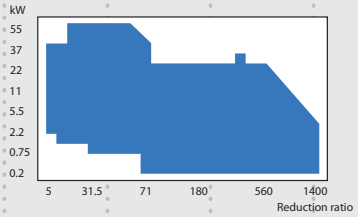

Parallel shaft

ASTERO® Gearmotor

The motor and gear head are isolated and easy-to-use.
You can choose combinations of abundant motor variations.

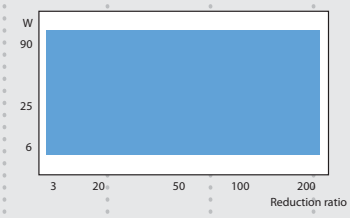

Prest® NEO Gearmotor

Compact, low-noise, large allowable load, etc.
New parallel shaft gearmotor with ultimate ease-of-use.

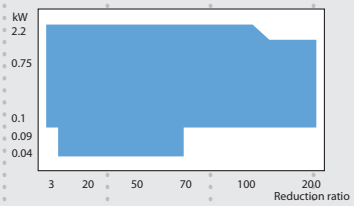

Helical Buddybox® Drive

Parallel shaft gearmotor combining CYCLO® Drive and hollow shaft Helical Buddybox.

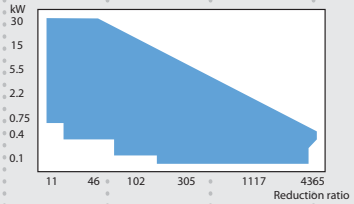

PARAMAX® Drive 9000 series

Compact adopting a high-strength gear.
High-functionality and high-performance parallel shaft drive.
- Rated torque: 2.6 to 552kN·m

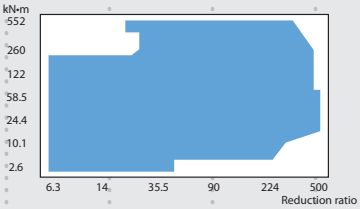

6W 40W 90W 0.1kW 0.2kW 2.2kW 3.7kW 5.5kW 30kW 55kW 132kW 1000kW

Right angle shaft

15W 25W 90W 0.1kW 5.5kW 11kW 55kW 1400kW

ASTERO® Gearmotor

Isolated right angle shaft gearmotor which adopts HYPOID Gear.
High-efficiency with no torque limitation.

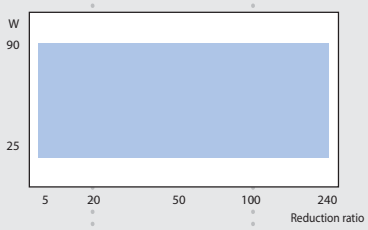

HYPONIC Drive®

HYPOID Gear is adapted.
Wide variations which can provide 15W to 11kW capacity range and service factors are availabe.

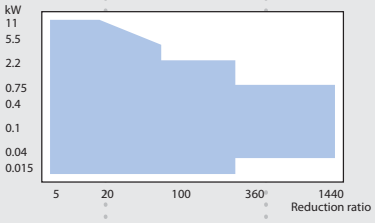

Bevel Buddybox® Drive

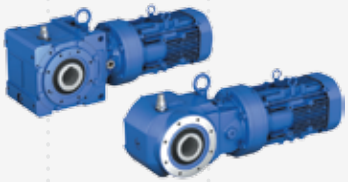

Right angle shaft gear motor with the bevel gear added to the output stage making use of the features of CYCLO® Drive.

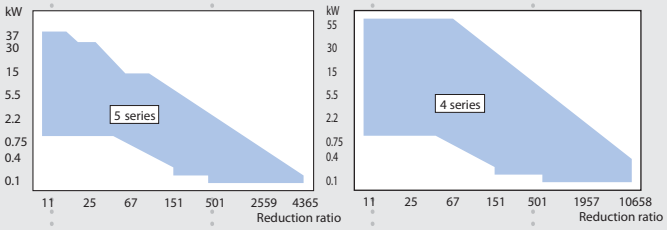

PARAMAX® Drive 9000 series

Adoption of a high-strength gear realizes compactification and a gearmotor type structure.
High-functionality and high-performance right angle shaft drive.
- Rated torque: 2.6 to 552kN·m

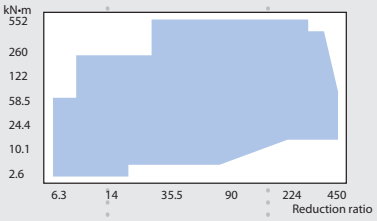

15W 25W 90W 0.1kW 5.5kW 11kW 55kW 1400kW

Trusted and proven lineup

Product Lineup

Motion control drive (MCD)

Allowable peak torque

30N·m 35N·m 330N·m 380N·m 410N·m 1000N·m 1370N·m 3000N·m 3100N·m 6200N·m 7600N·m 11000N·m

CYCLO® Drive F Series for Precise Control

FC-A F1C-A F2C-A series

For positioning
Compact
type

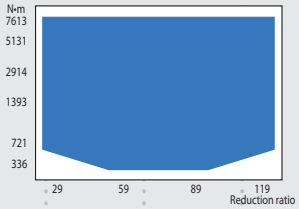

F4C-D series

For positioning
High-
performance
Compact
type

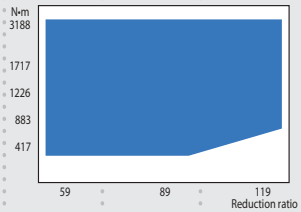

F4C-C F2C-C series

For positioning
Large-diameter
hollow
High-speed
shaft type

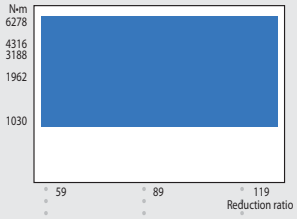

FC-T F2C-T series

For positioning
High-speed
reduction type

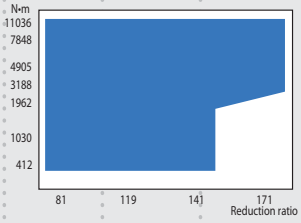

Planetary gear drive

IB series

Planetary gear drive for servo motor
Most compact in the industry.
- Backlash: P1 type 3min/15min
  P2 type 3min
  PK1 type 6min/15min

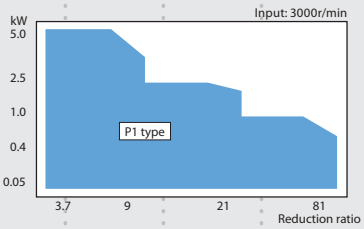

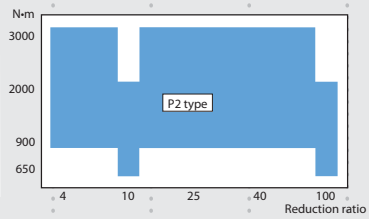

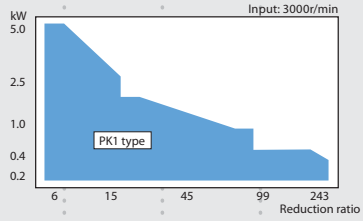

CYCLO® Drive

CYCLO® Drive for servo motor

CYCLO Drive with flange for the servo motor of each company
- Backlash: Standard series 60min
  Low backlash series 6min

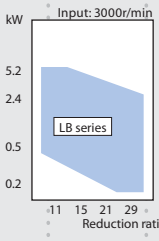

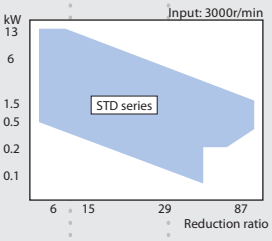

30N·m 35N·m 330N·m 380N·m 410N·m 1000N·m 1370N·m 3000N·m 3100N·m 6200N·m 7600N·m 11000N·m

Inverter

25W | 0.1kW | 0.2kW | 0.75kW | 2.2kW | 3.7kW | 5.5kW | 7.5kW | 55kW

CAI series

Compact and easy-to-use inverter.
The power source is common to single-phase 100V/200V.
- Output: 25W to 100W

SF-520 series

Simple inverter for gearmotor easy to use.
- Output: 0.1kW to 2.2kW

HF-520/HF-X20 series

High-torque and high-functionality sensorless vector inverter.
- Output: 0.2kW to 7.5kW
- Compatible with d2G4
(HF-X20 series/0.2kW to 3.7kW)

HF-430α series

High-performance sensorless vector inverter with built-in noise filter.
- Output: 5.5kW to 55kW
- Compatible with d2G4

Mechanical variator

Beier® Variator

Mechanical variator with the track record of tradition and trust of 50 years or longer for its high capacity and long life.
- Capacity: 0.2kW to 150kW

Warm drive

HEDCON® Worm Drive

High-performance Worm Drive which achieved high efficiency and high strength using unique double enveloping theory.
- Torque: 0.8 to 82kN·m

Precautions for the Premium Efficiency Motor

Commercial power source

The features of the premium-efficiency motor (top-runner motor) are different from a conventional standard efficiency motor. Especially, at the time of replacement from the existing product, it is necessary to review the power and peripheral equipment.

Motor characteristics

[Example]

Motor capacity 2.2kW
Power source voltage
200V 60Hz

Standard-efficiency motor

Motor speed:	1700r/min	Starting torque:	204%
Rated current:	8.90A	Stall torque:	229%
Starting current value:	46.9A		

Premium-efficiency motor

Motor speed:	1740r/min	Starting torque:	297%
Rated current:	9.32A	Stall torque:	402%
Starting current value:	74.9A		

The premium-efficiency motor:

- reduces the occurrence loss so its speed is faster than that of the former standard-efficiency motor.
  For purposes for which the operation speed cannot be raised, it is necessary to reconsider the reduction ratio associated with an increase in the motor speed.
- If the load torque becomes equivalent or larger than that of the standard-efficiency motor due to an increase in the speed, the motor output will also increase.
  Depending on the load conditions, the power consumption may increase more than that of the standard-efficiency motor.
- To reduce copper loss, the winding resistance of the motor is lowered and the starting current, starting torque, and stall torque (maximum torque) is higher than those of the standard-efficiency motor.
- In some cases, it may be necessary to change peripheral equipment such as the circuit breaker

Starting and stopping frequency and load coefficient of the drive

Standard-efficiency motor

Starting and stopping frequency (times/hour)	Less than 10 hours a day			Less than 24 hours a day		
	I	II	III	I	II	III
10 or less	1.00	1.15	1.50	1.20	1.30	1.65
200 or less	1.10	1.35	1.65	1.30	1.50	1.85
500 or less	1.15	1.50	1.80	1.40	1.65	2.00

Premium-efficiency motor

Starting and stopping frequency (times/hour)	Less than 10 hours a day			Less than 24 hours a day		
	I	II	III	I	II	III
1 or less	1.00	1.15	1.50	1.20	1.30	1.65
3 or less	1.00	1.25	1.60	1.20	1.40	1.70
10 or less	1.00	1.35	1.70	1.20	1.50	1.80
60 or less	1.00	1.45	1.75	1.25	1.65	2.00

- Since the starting torque and stall torque (maximum torque) of the premium-efficiency motor are large, the selection procedure, start and stall frequencies, and drive load coefficient are different from those of a standard-efficiency motor. (For details see B10)

Inverter drive

Though it can be used in the same way as a standard-efficiency motor, the parameters (rated current,etc) of the inverter duty motor are different.

If the existing product is replaced with a premium-efficiency motor and the existing inverter continues to be used, the parameters of the inverter must be changed.

Electronic thermal relay setting

- Since the rated current is higher than that of the standard-efficiency motor, it is necessary to change the setpoint of the electronic thermal relay.

During V/F control and fixed torque boost operation

- With the setpoint torque boost for the standard-efficiency motor, the current flow may be excessive during slow speed operation. If the current flow is too much, reduce the setpoint value.

During sensorless control operation

- After replacing the gearmotor, perform auto-tuning.

Motor brakes

The characteristics of the brake of the premium-efficiency motor differ from those of the conventional standard-efficiency motor and AF motor for inverter. For example, the operation delay time at the time of braking, and the standard brake torque are different.
The braking stop position may be misaligned, particularly in the case of replacement of the existing product. It may be necessary to review the braking circuit and the control signal timing of braking in the inverter-drive.

[Example] Motor capacity 2.2kW

Brake characteristics		Standard-efficiency motor		Premium-efficiency motor	
		3-phase motor	AF Motor for Inverter	Premium-Efficiency, 3-phase motor	Premium-efficiency, 3-phase motor for inverter
Brake type		FB-3D	FB-5B	FB-3E	
Brake torque (N･m)		22	37	22	
at the time of braking (sec)	Normal braking circuit (Simultaneous turn-off circuit)	0.3 - 0.4	-	0.75 - 0.95	-
	Normal braking circuitfor inverter (Separate turn-off circuit)	0.15 - 0.2	0.2 - 0.25	0.4 - 0.5	
	Quick-braking circuit	0.01 - 0.02	0.01 - 0.02	0.02 - 0.04	

Compliance with International Standards

The standards of the motor vary according to the country and region.

The characteristics standards and safety standards of the motor vary according to the country and region so when using a motor outside Japan, the motor has to be compliant with the standards of the corresponding country and region.

The efficiency regulation is enforced in each country.

For the prevention of global warming, we are required to reduce the use of energy, which is a source of CO2 emissions, and efficiency regulations are enforced in various countries to encourage propagation of high-efficiency motors.

Contents of the efficiency regulation of each country and region and Sumitomo's response condition (as of March 2016)

	Country/Region	Europe (EU)		China	Korea		Taiwan	United States	Canada		Brazil	Australia New Zealand	Russia
Regulation contents	Standard	ErP. IEC		GB	KS		CNS	EISA. NEMA	EEAct CSA		NBR	AS	TR CU
	Efficiency level	High-efficiency /IE2	Premium-efficiency/IE3) or High-efficiency/ IE2 + Variable	High efficiency/GB3 grade (IE2) (GB18613-2012 3 grade)	High-efficiency /IE2	Premium-efficiency /IE3	High-efficiency/IE2	Premium-efficiency/IE3 (The mono-block motor is not subject)	High-efficiency /IE2 (The mono-block motor is high-efficiency/IE2)	Premium-efficiency/IE3	High-efficiency/IE2	High-efficiency/EFF1 (EFF1 is in between IE2 and IE3)	High-efficiency/IE2
	Start of regulation	June 16, 2011	January 01, 2015	September 1, 2012 (revised)	January 01, 2011	October 01, 2015	January 01, 2015	December 19, 2010	January 01, 2011		December 8, 2009	Australia: April 1, 2006 New Zealand: June16, 2006	Unknown
	Capacity range	0.75 to 5.5kW	7.5 to 375kW	0.75 to 375kW	0.75 to 30kW	37 to 200kW (quadrupole)	0.75 to 200kW (1 to 270HP)	1 to 200HP	1 to 500HP	1 to 200HP	1 to 250HP (quadrupole)	0.73 to 185kW	0.75 to 375kW
	Number of Poles	2, 4, 6		2, 4, 6	2, 4, 6, 8		2, 4, 6	2, 4, 6, 8	2, 4, 6, 8		2, 4, 6, 8	2, 4, 6, 8	2, 4, 6
	Power source voltage Frequency	1000V or less 50Hz、50/60Hz		1000V or less 50Hz	600V or less 60Hz		600V or less 60Hz, 50/60Hz	230/460V 60Hz	600V or less 60Hz, 50/60Hz		600V or less 60Hz	1100V or less 50Hz	1000V or less 50, 60, 50/60Hz
	Applicable models	General-purpose motor		General-purpose motor Mono-block gearmotor	General-purpose motor and mono-block gearmotor Motor with mono-block brake		General-purpose motor	General-purpose motor	Mono-block gearmotor	General-purpose motor	General-purpose motor Mono-block gearmotor	General-purpose motor Mono-block gearmotor	General-purpose motor
	Non-applicable models	Motor with mono-block brake Motor for inverter		Motor with electromagnetic brake Motor for inverter Clarify 11 types such as the pump mono-block	Pump mono-block, etc.		Mono-block gearmotor Motor for inverter, etc.	Mono-block gearmotor Motor with mono-block brake Motor for inverter, etc.	Motor with mono-block brake Motor for inverter, etc.		Motor for inverter Explosion proof motor	Motor for inverter	Explosion proof motor Submersible motor, etc.
	Others	There is no certification nor label system. The efficiency value and efficiency class are printed on the nameplate.		Attach a CEL label	Attach a KEL label		Mono-block gearmotor is not subject to the efficiency regulation	From June 1, 2016, the mono-block gearmotor and mono-block motor with brake will be subject to the regulation.	Impress the certification mark on the nameplate Energy Verified		Attach a ABNT label	There is no label system but a certification system. The efficiency value is printed on the nameplate.	There is no certification or label system. The efficiency value and efficiency class are printed on the nameplate.
Our response contents	Efficiency level	Premium-efficiency/IE3		High-efficiency/IE2	Premium-efficiency/IE3		Standard-efficiency/IE1	Premium-efficiency/IE3	Premium-efficiency/IE3		High-efficiency/IE2	High-efficiency/IE2	Standard-efficiency/IE1
	Capacity range	0.75 to 55kW		0.75 to 30kW	0.75 to 55kW		0.1 to 55kW	1 to 75HP	1 to 75HP		0.75 to 30kW	1 to 15HP	0.1 to 37kW
	Number of Poles	4		4	4		4	4	4		4	4	4
	Representative power source Voltage frequency	230/400V, 400V 50Hz		220/380V 50Hz	220/380V, 440V 60Hz		220/380V 60Hz	230/460V 60Hz	230/460V, 575V 60Hz		415V 50Hz	220V, 380V, 440V 60Hz	220/380V, 380V 50Hz

The standard efficiency is applied to the capacities not subject to the efficiency regulation.

Efficiency regulations of the major countries and regions

Note that many countries and regions will migrate to the IE3 class.

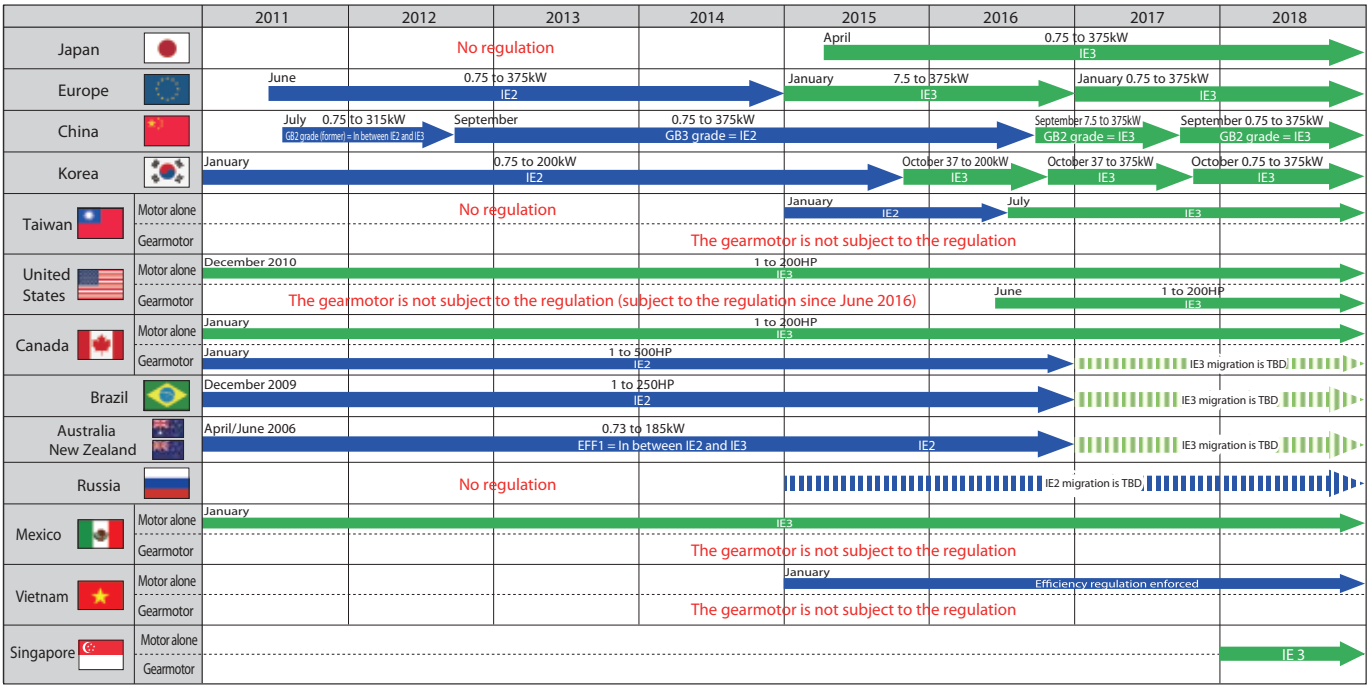

Nomenclature

R N Y M 1 – 1420 – EP – B – 60

Product	
R	Hyponic

Output shaft direction	
N	Universal

Mounting	
Y	Hollow

Input Connection	
M	Integral motor

Input Power	
1	0.75kW
1H	1.1kW
2	1.5kW
3	2.2kW
4	3.0kW
5	3.7kW
8	5.5kW
10	7.5kW
15	11kW

Hyponic frame size	
1310	1320
1410	1420
1510	1520
1521	1522
1530	1531
1630	1631
1632	1633
1634	1640

Shaft Spec.	Symbol
Metric Size	Blank
Inch Size	Y
AGMA 1	YA
AGMA 2	YB
AGMA 3	YC

Suffix	
EP	Premium Eff (IE3)

Brake	
Blank	Without brake
B	With brake

Reduction ratio

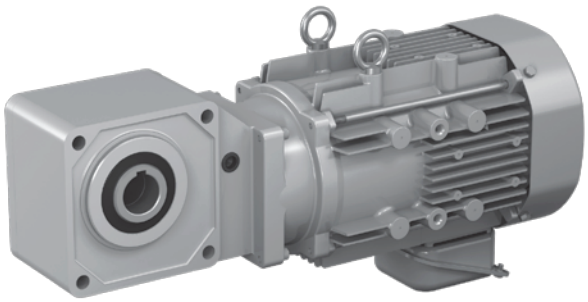

RNYM Series
Hollow shaft type

(Solid shaft, foot mount and flange mount options are available.
Consult your Sumitomo representative)

Nomenclature

Z	N	H	M	01	—	1180	—	EP	—	B	—	30
①	②	③	④	⑤		⑥		⑦		⑧		⑨

① **Product**	PREST NEO	Z

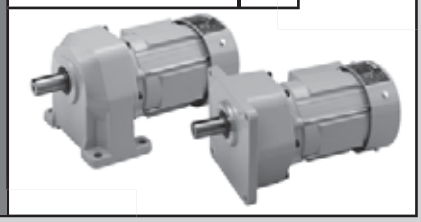

② **Output shaft direction**	Universal	N

③ **Mounting method**	Foot mount	H	Flange mount	F

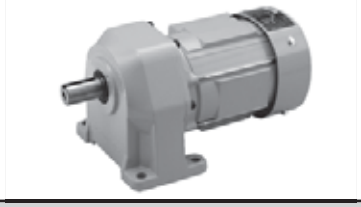

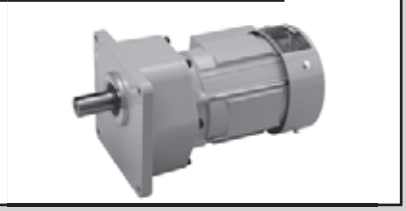

④ **Input connection**	Integral motor	M

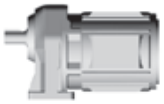

⑤ **Motor capacity symbol**	Capacity symbol (4-pole)	01	02	05	1	2	3
	kW（HP）	0.1 (1/8)	0.2 (1/4)	0.4 (1/2)	0.75 (1)	1.5 (2)	2.2 (3)

⑥ **Frame number**	1180	1220	1221	1280	1281	1320
	1321	1400	1401	1500	1501	

⑦ **Suffix**	With Premium-efficiency, 3-phase motor	EP

⑧ **With/without brake**	Without brake	
	With brake	B
	With fingertip brake release mechanism	C

⑨ **Nominal reduction ratio**	(For actual reduction ratio, see Selection Tables)

Nomenclature

L	N	Y	M		3	–	HZ522	–	EP	–	B	–	10
[1]	[2]	[3]	[4]	[5]	[6]		[7]		[8]		[9]		[10]

[1] Model code	Bevel Buddybox drive	L
[2] Slow speed shaft direction	Universal mounting	N
[3] Mounting style	Hollow shaft/On-axis mounting type	Y

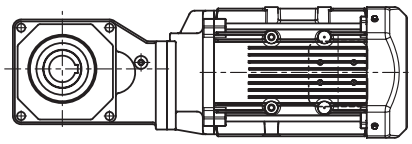

[4] Motor connection method	Motor directly connected	M

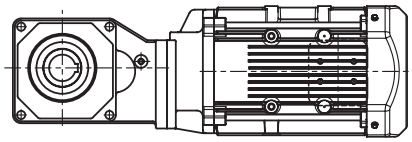

[5] Special specification	Standard Specification	Blank
	Special Specification	S

[6] Input capacity code	4P	Capacity symbol kW (HP)	3 2.2(3)	4 3.0(4)	5 3.7(5)	8 5.5(7.5)	10 7.5(10)	15 11(15)

[7] Frame size	See the selection table starting on page B12.
[8] Suffix	With Premium-efficiency, 3-phase motor EP

[9] Brake status	Without brake	Blank
	With brake	B

[10] Reduction ratio	Nominal ratio (☞ refer to selection table for actual ratio)

Notes

Selection Procedure (Example for BBB-H series)

Select the type referring to the flow chart. If you are not sure of the selection method, please consult us.

Step1: Determination of the operation conditions

Before starting selection, determine the following conditions:

- Purpose
- Whether the product is operated continuously or started and stopped frequently
- Whether the power source is directly input, star delta starting or inverter driven
- Motor capacity (kW) and output speed or reduction ratio
- Radial load
- Operation time per day
- Degree of the impact load
- Mounting direction (output shaft direction)
- Specifications related to motors (power source frequency, voltage, existence of brake, etc.)
- Ambient conditions (operating environment)

Step 2: Selection of the type

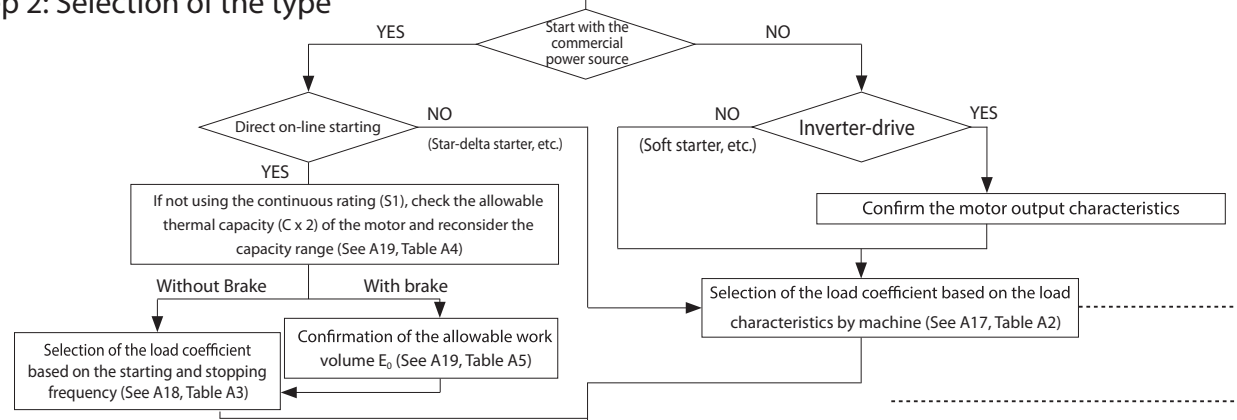

Selection of the output speed and reduction ratio

Checking the output torque $T_L \leq T_{out}$

T_L: Load torque, T_{out}: Output torque

Determination of the drive frame size
Load coefficient =< Service factor of the drive (SF)

Step3: Confirmation

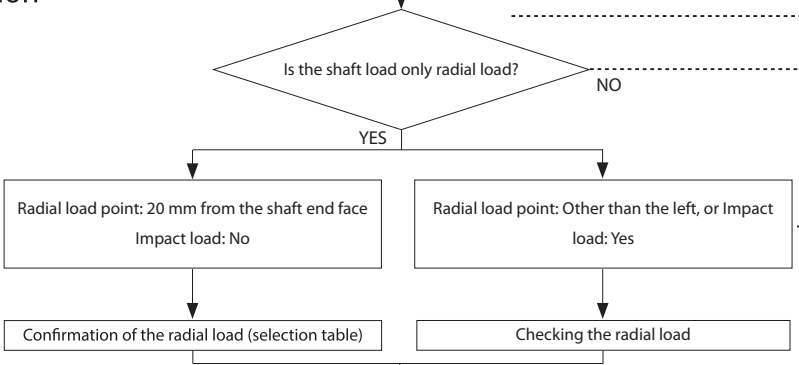

Is the shaft load within the allowable radial load Pro value of the output shaft?

NO

YES

Confirmation of the dimensions

Confirmation of the ambient conditions

Confirmation of the motor specifications

Step4: Determination of the nomenclature and completion

Completion of the determination and selection of the nomenclature

Confirm the strength of the output shaft and the coupler (key surface pressure, etc.)

Descriptions of terms
- Service factor (SF) Value calculated by dividing the allowable input capacity of the drive by the motor capacity. - Operating environment package Package created to enable to determine the specifications just by selecting the levels to prevent three environmental elements (water, corrosion and powder dust) (See B7).

Description of the procedure
- Select the load coefficient suitable for your purpose from A17.
- For operation to repeat starting and stopping, confirm the starting and stopping frequency and load coefficient of the drive of A17, and the allowable heat capacity of the motor of A19. Also confirm that with flange, the braking work volume is equivalent to or less than the allowable work volume E_0 in A19.
- Confirm the brake torque in K4.
- Open the page where your motor capacity is described in the selection table from B2.
- Select the column where the values closest to the output speed or reduction ratio in use is described in the selection table.
- Confirm that the output torque meets your usage value. If the output torque is insufficient, use a one-class larger motor capacity.
- Select a combination with a larger service factor (SF) then the selected load coefficient from the selection table.
- Confirm whether the radial load is the only load applied to the slow speed shaft of the drive.
- Consult us.
- Please use the Bevel Buddybox series 4.
- Confirm that the selected combination is compatible with the direction, mounting style, and lubrication method of your slow speed shaft.
- Confirm the dimensions. If it is not compatible with your operating conditions, please consult us.
- Confirm with "Standard specifications" that the selected combination is compatible with the conditions such as the surrounding environment. Also specify "Operating environment package".
- Confirm that the motor directly connected to the selected type is compatible with your operating conditions (power source, environment, thermal class, etc.).
- For the selected type, determination of the nomenclature referring to "Nomenclature" in A12. The type selection is completed.
- Confirm with the maximum torque at starting and stopping.

Selection Example (Example for BBB-H series)

Select the type using an example according to the selection procedure on A14.

○ Operating conditions

- Use:	Chain conveyor	- Motor specifications	
- Operation pattern:	Continuous operation	Power source frequency:	50Hz
- Operation time per day:	24 hours/day	Voltage:	200V
- Load capacity:	6.5kW	Brake:	No
- Output speed:	145r/min		
- Connection with the other machines:	Hollow shaft on-axis mounting	Other:	Indoor type
	Torque arm fixing		
Load location:	20 mm from shaft end face	- Ambient conditions	
Radial load:	3000N	Ambient temperature 20℃	Indoor
- Level of impact load:	No impact		

Select the type based on the following conditions.

Usage conditions and selection and calculation results	Page in this catalog
○ Selection of the load coefficient Load characteristics of chain conveyor use → U (uniform load) Load coefficient = 1.25 (U, operating 24 hours/day)	Page A17 Table A2 Load characteristics by machine Table A1 Load coefficient of the drive
○ Selection of the motor capacity Load capacity = 6.5kW → Motor capacity = 7.5kW	Page H4 Gearmotor selection table
○ Selection of the output speed Power source frequency 50Hz, output speed 145r/min -> 1450/145 = 10:1 ratio	Page H4 Gearmotor selection table
○ Confirmation of the output torque $T_L = \frac{9550 \times 6.5\ (kW)}{1450} \times 10 = 428N{\cdot}m \leq 468N{\cdot}m \rightarrow OK$ T_L: Load torque	Page H4 Gearmotor selection table
○ Determination of the drive frame size Load coefficient = 1.25 ≤ 1.46 Drive frame size and reduction ratio: 10-HZ524-EP-10	Page H4 Gearmotor selection table
○ Check of the radial load Pr ≤ Pro/Cf 3000 (N) ≤ 5450 (N)/1 = 5450 (N) → OK	Page H4 Gearmotor selection table
○ Confirmation of the dimensions Confirm with the dimension table	Page I3 Dimension table
◎ Determination of the nomenclature Determined nomenclature: LNYM10-HZ524-EP-10 Selection is completed.	Page A12 Nomenclature

Load Coefficient

The Bevel Buddybox Drive H series is designed for operating conditions of uniform load and 10 hours per day of use.
The following load coefficient must be anticipated in cases where daily machine use exceeds 10 hours per day, or depending on the load conditions of the machine in use.
The selection methods of the load coefficient are divided into (1) or (2) below:

(1) Selection based on the load characteristics by machine

[Classification of the load coefficient] U: Uniform load M: Light impact H: Heavy impact

Table A1 - Load coefficient of the drive

Operation time	Up to 10 hours/day			Up to 24 hours/day		
	U	M	H	U	M	H
Load coefficient	1.00	1.25	1.75	1.25	1.50	2.00

Note) The load coefficient is different to that of the Bevel Buddybox 4 series and 5 series.

Table A2 - Load characteristics by machine

Compressor and pump	
Compressor	
Reciprocating type Multi-cylinder	M
Single cylinder	H
Pump	
Centrifugal	U
Fin type	M
Reciprocating type	
Singe-acting 3-cylinder or more	M
Double-acting 2-cylinder or more	M
Rotary (gear type, etc.)	*
Transport and hoisting machine	
Elevator	
Bucket uniform load	U
Heavy load	M
Escalator	U
Flight	M
For passengers and workers	*
Water gate	*
Car dumper	H
Car puller	M
Crane hoist	
Main hoisting Medium load	M
Heavy load	H
Skip hoist	M
Girder traveling and trolley traverse	*
Conveyor (uniform load)	
Apron, assembly, Belt, bucket, chain, flight, oven, and screw	U
conveyor (heavy load and fluctuating feed)	
Apron, assembly, belt, and bucket, Chain, flight	M
oven, screw reciprocating, and shaker	H
Stoker	U
Dry dock crane	*
Feeder	
Disk	U
Apron, belt, and screw	M
Reciprocating	H
Mixing machine	
Agitator	
Pure liquid	U
Liquid (changing density)	M
Liquid and solid	M
Mixer	
Constant density	U
Changing density	M
Concrete mixer	M
Selection machine	
Classifier	M
Screen	
rotary (stone and gravel)	M
Air system	U
Traveling screen	U
Mill	
Crasher	
Ore and stone	H
Mill (rotary)	
Ball Bevel, Rod hammer	H
Kiln	M
Tumbler	H
Sand Muller	M
Printing machine	*
Washing machine	M
Machine tool	
Tapping machine	H
Punch press (gear driven)	H
Planar	H
Bending roll	M
General machine tools	
Rubber and plastic	
Extruder	
Rod, pipe, and tube	U
Blow molding machine	M
Pre-plasticizer	M
Others	*
Mixer	H
Rubber Calendar	M
Rubber mill (2 or more parallels)	M
Sheeter, refiner	M
Tuber, strainer	M
Cracker	H
Dryer	*
Dredger	
Cable reel, conveyor	M
Cutter head drive	H
Jig drive	H
Screen drive	H
Stacker, winch	M
Food	
Rice milling machine	U
Beet slicer	M
Dow mixer	M
Meat grinder	M
Dryer	*
Brewing and distilling	
Canning machine, bottling machine	U
Brew kettle (continuous)	U
Mash tub (continuous)	U
Cooker (continuous)	U
Scale hopper (frequent starting)	M
Paper making	
Aerator	*
Agitator	M
Barker auxiliary (Hydraulic type)	M
Mechanical barker	M
Drum barker	H
Beater, pulper	M
Bleaching machine	U
Conveyor	U
Conveyor (for logs)	H
Cutter, plater	H
Cylinder	M
Reel (for pulp)	M
Chest	M
Washer, thickener	M
Paper machine	
Couch	M
Suction roll	U
Press	U
Dryer	M
Calendar	M
Super calendar	H
Winder	U
Ironmaking	
Bridle roll drive	H
Slug pusher	M
Draw bench (truck, main drive)	H
Molding machine	H
Slitter	M
Table conveyor	*
Pinch dryer, scrubber roll	*
Wire drawing machine, rolling mill	M
Wire winder	M
Reel (for strip)	M
Sugar refining	
Cane knife	M
Crusher	M
Mill	H
Oil refining	
Chiller	M
Paraffin filter press	M
Rotary kiln	M
Cement	
Dryer, cooler	M
Cement kiln	*
Fiber and spinning and weaving	
Batcher, calendar, and card	
Dryer and dyeing machine	
Mangle, napper, pad	M
Slasher, soaper, and winder	
Spinning machine, stenter, and washer	
Cloth finishing machine	M
Washer, pad, stenter (dryer, calendar, etc.)	
Ship	
Barge tower	H
Windlass	*
Steering engine	M
Capstan and cargo winch	*
Mooring winch	*
Turning gear	*
Ceramics industry	
Brick press, briquetting machine	H
Pug mill	M
General ceramics machinery	M
Water treatment	
Clarifier	U
Bar screen	U
Chemical filter	U
Collector	U
Dehydration screen	M
Scum breaker	M
Mixer	M
Thickener	M
Vacuum filter	M
Aerator	*
Flocculator	M
Rotary screen	U
Wood industries	*

For machines with * symbol or not described in the table, please consult us.

Note) Since the names and machine characteristics in this table may differ from those of the machine to be used, please use the values in this table as a reference only.

Load Coefficient

(2) Selection based on the starting and stopping frequency

If the machine is starting and stopping frequently during operation, select the product based on the starting and stopping frequency and the load coefficient of the drive (Table A3). At the same time, confirm the allowable hear capacity of the motor as shown in Table A4. Further, calculate the braking workload for brakemotors by reference page C27. Confirm that it is equal to or less than the allowable workload E_0 described in Table A5. (Also confirm it for emergency stopping)

Table A3 - Starting and stopping frequency and load coefficient of the drive

Premium-efficiency, 3-phase motor

Starting and stopping frequency	Less than 10 hours a day			Less than 24 hours a day		
(times/hour)	I	II	III	I	II	III
1 or less	1.00	1.15	1.50	1.20	1.30	1.65
3 or less	1.00	1.25	1.60	1.20	1.40	1.70
10 or less	1.00	1.35	1.70	1.20	1.50	1.80
60 or less	1.00	1.45	1.75	1.25	1.65	2.00

$$\text{Inertia moment } (GD^2) \text{ ratio} = \frac{\text{Inertia moment of the load converted to the motor shaft } (GD^2 \text{ of the load converted to the motor shaft})}{\text{Inertia moment of the motor } (GD^2 \text{ of the motor})}$$

Classification of the load coefficient

I: Allowable inertia moment (GD^2) ratio =< 0.3

II: Allowable inertia moment (GD^2) ratio =< 3

III: Allowable inertia moment (GD^2) ratio =< 10

Notes)
1. The load coefficient is different to that of the Bevel Buddybox 4 series and 5 series.
2. Include the number of times that braking by brake, clutch etc. occur in the starting/stopping count.
3. If the machine is started under torque and radial loads, please consult us because it may be necessary to consider other options.
4. If the ratio of the starting and stopping frequency to the inertia moment (GD^2) exceeds the above-mentioned value, please consult us.

Precautions

- With premium efficiency 3-phase motors, since the starting torque and stall torque (maximum torque) are large, selection procedures, starting and stopping frequencies, and the load coefficient of the drive are different from conventional motors.

Table A4 - Allowable heat capacity of the motor (C x Z)

kW x 4P		Allowable C x Z				Moment of inertia of the motor kg·m²		Motor GD² kgf・m²	
		(35%ED or less)	(Over 35%ED to 50%ED or less)	(Over 50%ED to 80%ED or less)	(Over 80%ED to 100%ED or less)	Standard	With brake	Standard	With brake
Premium-efficiency, 3-phase motor	2.2	1000	900	400	200	0.00880	0.00978	0.0352	0.0391
	3.0	1000	900	400	200	0.0100	0.0110	0.0400	0.0440
	3.7	800	800	800	700	0.0194	0.0209	0.0777	0.0835
	5.5	300	300	200	150	0.0291	0.0306	0.116	0.122
	7.5	400	350	300	300	0.0409	0.0450	0.164	0.180
	11	200	200	150	150	0.0561	0.0602	0.224	0.241

Check that C x Z calculated in (1) through (3) below is within the allowable CZ in the motor capacity-%ED corresponding to Table B4.

(1) You can calculate C from the following equation.

[SI unit] $$C = \frac{J_M + J_L}{J_M}$$

[Gravity unit] $$C = \frac{GD_M^2 + GD_L^2}{GD_M^2}$$

J_M; Moment of inertia of the motor (kg·m²)

J_L; Motor axis conversion, Total moments of inertia excluding the motor (kg·m²)

GD_M^2; Motor GD² (kgf·m²)

GD_L^2; Motor axis conversion, total GD excluding the motor² (kgf·m²)

(2) Calculate the number of times starting occurs per hour (times/hr).

(A) Assuming, of one cycle, the operation time to be t_a(s) and the pause time to be t_b(s), when starting n_r(times/cycle) during this period

$$Z_r = \frac{3600 n_r}{t_a + t_b} \text{ (times/hr)}$$

(B) Further, when including the number of times of inching n_i(times/cycle) during 1 cycle (t_a+t_b), this is converted to the number of times of starting, in which it is converted to the number of times of inching per hour Z_i.

$$Z_i = \frac{3600 n_i}{t_a + t_b} \text{ (times/hr)}$$

(c) Calculate the number of times of starting per hour Z (times/hr) from (a) and (b).

$$Z = Z_r + \frac{1}{2} Z_i = \frac{3600}{t_a + t_b} \cdot \left(n_r + \frac{1}{2} n_i\right) \text{ (times/hr)}$$

(3) Calculate C x Z.

Calculate the product of C calculated in (1) and Z calculated in (2): C x Z.

(4) Load time rate %ED

$$\%ED = \frac{t_a}{t_a + t_b} \times 100$$

Table A5 - Allowable work volume of the motor brake E_0 Unit: E_0 (J/min)

Brake type	FB-3E FB-4E	FB-5E FB-8E	FB-10E FB-15E
Allowable work volume E_0	5720	6900	10800

Notes

B

HYPONIC® Drive Gearmotor

Selection Table

Single Reduction type – Double Reduction type

About the suffix and possibility to manufacture the motor

- Empty : The 3-phase motor is 0.1 to 0.55kW
- EP : The premium-efficiency, 3-phase motor can be manufactured in combination with any frame sized of 0.75kW or higher.

- AV : AF Motor for Inverter
- AP : Premium-efficiency, 3-phase motor for inverter
- ES : High-efficiency 3-phase motor
  For these motors, confirm the columns of the possibility of manufacturing.

Legend

- ● Can be manufactured as a standard product.
- △ Can be manufactured but the specifications have to be confirmed, so please consult us.
- □ Please consult us.
- \- Cannot be manufactured.

Selection Table

0.75 kW

Frequency	Hz	50Hz	60Hz
Number of motor poles	P	4	
Motor speed n_1	r/min	1450	1750

50Hz					60Hz					SF	Nomenclature					Dimension Drawing Page
Output Speed n2	Output Torque Tout		Allowable Radial Load Pro		Output Speed n2	Output Torque Tout		Allowable Radial Load Pro				Input Capacity Symbol	Frame Size	Aux. Spec.	Reduction Ratio	
rpm	N.m	kgf.m	N	Kgf	rpm	N.m	kgf.m	N	Kgf							
290	21.0	2.14	1470	150	350	17.4	1.78	1370	140	2.05	RNYM	1 -	1310	EP (-B)	5	C2 ~ C3
			1470	150				1370	140	1.07		1 -	1320	EP (-B)	5	
			2160	220				2060	210	2.05		1 -	1420	EP (-B)	5	
207	29.4	3.00	1670	170	250	24.4	2.49	1570	160	2.05		1 -	1310	EP (-B)	7	
			1670	170				1570	160	1.07		1 -	1320	EP (-B)	7	
			2450	250				2300	235	2.05		1 -	1420	EP (-B)	7	
145	42.0	4.29	1810	185	175	34.8	3.55	1720	175	1.07		1 -	1310	EP (-B)	10	
			1810	185				1720	175	1.07		1 -	1320	EP (-B)	10	
			2750	280				2600	265	2.05		1 -	1420	EP (-B)	10	
121	50.4	5.14	1910	195	146	41.8	4.26	1810	185	1.07		1 -	1320	EP (-B)	12	
			2840	290				2750	280	2.05		1 -	1420	EP (-B)	12	
96.7	63.1	6.43	2060	210	117	52.2	5.33	1960	200	1.07		1 -	1320	EP (-B)	15	
			3090	315				2940	300	2.05		1 -	1420	EP (-B)	15	
72.5	84.1	8.57	2260	230	87.5	69.7	7.10	2160	220	1.07		1 -	1320	EP (-B)	20	
			3330	340				3190	325	2.05		1 -	1420	EP (-B)	20	
58.0	105	10.7	2350	240	70.0	87.1	8.88	2260	230	1.07		1 -	1320	EP (-B)	25	
			3530	360				3380	345	2.05		1 -	1420	EP (-B)	25	
48.3	126	12.9	2450	250	58.3	104	10.7	2350	240	1.07		1 -	1320	EP (-B)	30	
			3730	380				3580	365	2.05		1 -	1420	EP (-B)	30	
36.3	168	17.1	3970	405	43.8	139	14.2	3820	390	1.07		1 -	1420	EP (-B)	40	
			5740	858				5540	565	2.05		1 -	1520	EP (-B)	40	
29.0	210	21.4	4170	425	35.0	174	17.8	4020	410	1.07		1 -	1420	EP (-B)	50	
			6030	615				5830	595	2.05		1 -	1520	EP (-B)	50	
24.2	252	25.7	4310	440	29.2	209	21.3	4170	425	1.07		1 -	1420	EP (-B)	60	
			6230	635				6030	615	2.05		1 -	1520	EP (-B)	60	
18.1	336	34.3	6230	635	21.9	279	28.4	6130	625	1.07		1 -	1530	EP (-B)	80	C4 ~ C5
			6230	635				6130	625	2.05		1 -	1531	EP (-B)	80	
14.5	420	42.9	6230	635	17.5	348	35.5	6230	635	1.07		1 -	1530	EP (-B)	100	
			9810	1000				9810	1000	2.93		1 -	1630	EP (-B)	100	
12.1	504	51.4	6230	635	14.6	418	42.6	6230	635	1.07		1 -	1530	EP (-B)	120	
			9810	1000				9810	1000	2.93		1 -	1630	EP (-B)	120	
9.67	631	64.3	6230	635	11.7	522	53.3	6230	635	1.07		1 -	1530	EP (-B)	150	
			9810	1000				9810	1000	2.35		1 -	1631	EP (-B)	150	
7.25	732	74.6	6230	635	8.75	697	71.0	6230	635	*		1 -	1530	EP (-B)	200	
	841	85.7	9810	1000		697	71.0	9810	1000	1.76		1 -	1631	EP (-B)	200	
6.04	732	74.6	6230	635	7.29	732	74.6	6230	635	*		1 -	1530	EP (-B)	240	
	1010	103	9810	1000		836	85.2	9810	1000	1.47		1 -	1631	EP (-B)	240	
4.83	1190	121	9810	1000	5.83	983	100	9810	1000	1.07		1 -	1640	EP (-B)	300	
4.03	1420	145	9810	1000	4.86	1180	120	9810	1000	1.04		1 -	1640	EP (-B)	360	
3.02	1480	151	9810	1000	3.65	1480	151	9810	1000	*		1 -	1640	EP (-B)	480	
2.42	1480	151	9810	1000	2.92	1480	151	9810	1000	*		1 -	1640	EP (-B)	600	
2.01	1480	151	9810	1000	2.43	1480	151	9810	1000	*		1 -	1640	EP (-B)	720	
1.61	1480	151	9810	1000	1.94	1480	151	9810	1000	*		1 -	1640	EP (-B)	900	
1.21	1480	151	9810	1000	1.46	1480	151	9810	1000	*		1 -	1640	EP (-B)	1200	
1.01	1480	151	9810	1000	1.22	1480	151	9810	1000	*		1 -	1640	EP (-B)	1440	

Selection Table

1.1 kW

Frequency	Hz	50Hz	60Hz
Number of motor poles	P	4	
Motor speed n_1	r/min	1450	1750

50Hz					60Hz					SF	Nomenclature					Dimension Drawing Page
Output Speed n2	Output Torque Tout		Allowable Radial Load Pro		Output Speed n2	Output Torque Tout		Allowable Radial Load Pro				Input Capacity Symbol	Frame Size	Aux. Spec.	Reduction Ratio	
rpm	N.m	kgf.m	N	Kgf	rpm	N.m	kgf.m	N	Kgf							
290	30.8	3.14	2160	220	350	25.5	2.60	2060	210	2.00 1.40	RNYM	1H 1H	1410 1420	EP (-B) EP (-B)	5 5	C2 ~ C3
207	43.2	4.40	2450	250	250	35.8	3.65	2300	235	2.00 1.40		1H 1H	1410 1420	EP (-B) EP (-B)	7 7	
145	61.7	6.29	2750	280	175	51.1	5.21	2600	265	1.40 1.40		1H 1H	1410 1420	EP (-B) EP (-B)	10 10	
121 96.7 72.5	74.0 92.5 123	7.54 9.43 12.6	2840 3090 3330	290 315 340	146 117 87.5	61.3 76.6 102	6.25 7.81 10.4	2750 2940 3190	280 300 325	1.40 1.40 1.40		1H 1H 1H	1420 1420 1420	EP (-B) EP (-B) EP (-B)	12 15 20	
58.0 48.3	154 185	15.7 18.9	3530 3730	360 380	70.0 58.3	128 153	13.0 15.6	3380 3580	345 365	1.40 1.40		1H 1H	1420 1420	EP (-B) EP (-B)	25 30	
36.3 29.0 24.2	247 308 370	25.1 31.4 37.7	5740 6030 6230	585 615 635	43.8 35.0 29.2	204 255 307	20.8 26.0 31.3	5540 5830 6030	565 595 615	1.40 1.40 1.40		1H 1H 1H	1520 1520 1520	EP (-B) EP (-B) EP (-B)	40 50 60	
18.1 14.5 12.1	493 617 740	50.3 62.9 75.4	6230 9810 9810	635 1000 1000	21.9 17.5 14.6	409 511 613	41.7 52.1 62.5	6130 9810 9810	625 1000 1000	1.40 2.00 2.00		1H 1H 1H	1531 1630 1630	EP (-B) EP (-B) EP (-B)	80 100 120	C4 ~ C5
9.67 7.25 6.04	925 1230 1480	94.3 126 151	9810 9810 9810	1000 1000 1000	11.7 8.75 7.29	766 1020 1230	78.1 104 125	9810 9810 9810	1000 1000 1000	1.60 1.20 1.00		1H 1H 1H	1631 1631 1631	EP (-B) EP (-B) EP (-B)	150 200 240	

1.5 kW

Frequency	Hz	50Hz	60Hz
Number of motor poles	P	4	
Motor speed n_1	r/min	1450	1750

50Hz					60Hz					SF	Nomenclature					Dimension Drawing Page
Output Speed n2	Output Torque Tout		Allowable Radial Load Pro		Output Speed n2	Output Torque Tout		Allowable Radial Load Pro				Input Capacity Symbol	Frame Size	Aux. Spec.	Reduction Ratio	
rpm	N.m	kgf.m	N	Kgf	rpm	N.m	kgf.m	N	Kgf							
290	42.0	4.29	2160 2160 3140	220 220 320	350	34.8	3.55	2060 2060 2940	210 210 300	1.47 1.03 1.47	RNYM	2 2 2	1410 1420 1520	EP (-B) EP (-B) EP (-B)	5 5 5	C2 ~ C3
207	58.9	6.00	2450 2450 3530	250 250 360	250	48.8	4.97	2300 2300 3330	235 235 340	1.47 1.03 1.47		2 2 2	1410 1420 1520	EP (-B) EP (-B) EP (-B)	7 7 7	
145	84.1	8.57	2750 2750 3920	280 280 400	175	69.7	7.10	2600 2600 3730	265 265 380	1.03 1.03 1.47		2 2 2	1410 1420 1520	EP (-B) EP (-B) EP (-B)	10 10 10	
121	101	10.3	2840 4120	290 420	146	83.6	8.52	2750 3970	280 405	1.03 1.47		2 2	1420 1520	EP (-B) EP (-B)	12 12	
96.7	126	12.9	3090 4410	315 450	117	104	10.7	2940 4220	300 430	1.03 1.47		2 2	1420 1520	EP (-B) EP (-B)	15 15	
72.5	168	17.1	3330 4810	340 490	87.5	139	14.2	3190 4610	325 470	1.03 1.47		2 2	1420 1520	EP (-B) EP (-B)	20 20	
58.0	210	21.4	3530 5100	360 520	70.0	174	17.8	3380 4900	345 500	1.03 1.47		2 2	1420 1520	EP (-B) EP (-B)	25 25	
48.3	252	25.7	3730 5340	380 545	58.3	209	21.3	3580 5150	365 525	1.03 1.47		2 2	1420 1520	EP (-B) EP (-B)	30 30	
36.3	336	34.3	5740 5740	585 585	43.8	279	28.4	5540 5540	565 565	1.03 1.47		2 2	1520 1531	EP (-B) EP (-B)	40 40	C2 ~ C3 C4 ~ C5
29.0	420	42.9	6030 6030	615 615	35.0	348	35.5	5830 5830	595 595	1.03 1.47		2 2	1520 1531	EP (-B) EP (-B)	50 50	C2 ~ C3 C4 ~ C5

Selection Table

1.5 kW

Frequency	Hz	50Hz	60Hz
Number of motor poles	P	4	
Motor speed n_1	r/min	1450	1750

50Hz					60Hz					SF	Nomenclature						Dimension Drawing Page
Output Speed n2	Output Torque Tout		Allowable Radial Load Pro		Output Speed n2	Output Torque Tout		Allowable Radial Load Pro				Input Capacity Symbol	Frame Size	Aux. Spec.	Reduction Ratio		
rpm	N.m	kgf.m	N	Kgf	rpm	N.m	kgf.m	N	Kgf								
24.2	504	51.4	6230	635	29.2	418	42.6	6030	615	1.03	RNYM	2	1520	EP (-B)	60		C2 ~ C3
			6230	635				6030	615	1.47		2	1531	EP (-B)	60		C4 ~ C5
18.1	673	68.6	6230	635	21.9	557	56.8	6130	625	1.03		2	1531	EP (-B)	80		C4 ~ C5
			9810	1000				9660	985	1.47		2	1630	EP (-B)	80		
14.5	841	85.7	9810	1000	17.5	697	71.0	9810	1000	1.47		2	1630	EP (-B)	100		
12.1	1010	103	9810	1000	14.6	836	85.2	9810	1000	1.47		2	1630	EP (-B)	120		
9.67	1260	129	9810	1000	11.7	1040	107	9810	1000	1.17		2	1631	EP (-B)	150		
7.25	1480	151	9810	1000	8.75	1390	142	9810	1000	*		2	1631	EP (-B)	200		
6.04	1480	151	9810	1000	7.29	1480	151	9810	1000	*		2	1631	EP (-B)	240		

2.2 kW

Frequency	Hz	50Hz	60Hz
Number of motor poles	P	4	
Motor speed n_1	r/min	1450	1750

50Hz					60Hz					SF	Nomenclature						Dimension Drawing Page
Output Speed n2	Output Torque Tout		Allowable Radial Load Pro		Output Speed n2	Output Torque Tout		Allowable Radial Load Pro				Input Capacity Symbol	Frame Size	Aux. Spec.	Reduction Ratio		
rpm	N.m	kgf.m	N	Kgf	rpm	N.m	kgf.m	N	Kgf								
290	61.7	6.29	3140	320	350	51.1	5.21	2940	300	2.50	RNYM	3	1510	EP (-B)	5		C2 ~ C3
										1.00		3	1520	EP (-B)	5		
										1.68		3	1521	EP (-B)	5		
207	86.3	8.80	3530	250	250	71.5	7.29	3330	340	1.68		3	1510	EP (-B)	7		
										1.00		3	1520	EP (-B)	7		
										1.68		3	1521	EP (-B)	7		
145	123	12.6	3920	280	175	102	10.4	3730	380	1.00		3	1510	EP (-B)	10		
										1.00		3	1520	EP (-B)	10		
										1.68		3	1521	EP (-B)	10		
121	148	15.1	4120	420	146	123	12.5	3970	405	1.00		3	1520	EP (-B)	12		
										1.68		3	1521	EP (-B)	12		
96.7	185	18.9	4410	450	117	153	15.6	4220	430	1.00		3	1520	EP (-B)	15		
										1.68		3	1521	EP (-B)	15		
72.5	247	25.1	4810	490	87.5	204	20.8	4610	470	1.00		3	1520	EP (-B)	20		
										1.68		3	1521	EP (-B)	20		
58.0	308	31.4	5100	520	70.0	255	26.0	4900	500	1.00		3	1520	EP (-B)	25		
										1.68		3	1521	EP (-B)	25		
48.3	370	37.7	5340	545	58.3	307	31.3	5150	525	1.00		3	1520	EP (-B)	30		
			8380	855				8090	825	1.68		3	1632	EP (-B)	30		C4 ~ C5
36.3	493	50.3	5740	585	43.8	409	41.7	5540	565	1.00		3	1531	EP (-B)	40		
			8830	900				8480	865	1.68		3	1632	EP (-B)	40		
29.0	617	62.9	6030	615	35.0	511	52.1	5830	595	1.00		3	1531	EP (-B)	50		
			9120	930				8880	905	1.68		3	1632	EP (-B)	50		
24.2	740	75.4	6230	635	29.2	613	62.5	6030	615	1.00		3	1531	EP (-B)	60		
			9410	960				9170	935	1.68		3	1632	EP (-B)	60		
18.1	986	101	9810	1000	21.9	817	83.3	9660	985	1.00		3	1630	EP (-B)	80		
14.5	1230	126	9810	1000	17.5	1020	104	9810	1000	1.00		3	1630	EP (-B)	100		
12.1	1480	151	9810	1000	14.6	1230	125	9810	1000	1.00		3	1630	EP (-B)	120		
9.67	1480	151	9810	1000	11.7	1480	151	9810	1000	*		3	1631	EP (-B)	150		
7.25	1480	151	9810	1000	8.75	1480	151	9810	1000	*		3	1631	EP (-B)	200		
6.04	1480	151	9810	1000	7.29	1480	151	9810	1000	*		3	1631	EP (-B)	240		

Selection Table

3.0 kW

Frequency	Hz	50Hz	60Hz
Number of motor poles	P	4	
Motor speed n_1	r/min	1450	1750

50Hz					60Hz					SF	Nomenclature					Dimension Drawing Page
Output Speed n2	Output Torque Tout		Allowable Radial Load Pro		Output Speed n2	Output Torque Tout		Allowable Radial Load Pro				Input Capacity Symbol	Frame Size	Aux. Spec.	Reduction Ratio	
rpm	N.m	kgf.m	N	Kgf	rpm	N.m	kgf.m	N	Kgf							
290	84.1	8.57	3140	320	350	69.7	7.10	2940	300	1.23 1.83	RNYM	4 4	1521 1522	EP (-B) EP (-B)	5 5	C2 ~ C3
207	118	12.0	3530	360	250	97.5	9.95	3330	340	1.23 1.83		4 4	1521 1522	EP (-B) EP (-B)	7 7	
145	168	17.1	3920	400	175	139	14.2	3730	380	1.23 1.83		4 4	1521 1522	EP (-B) EP (-B)	10 10	
121	202	20.6	4120	420	146	167	17.0	3970	405	1.23 1.83		4 4	1521 1522	EP (-B) EP (-B)	12 12	
96.7	252	25.7	4410	450	117	209	21.3	4220	430	1.23 1.83		4 4	1521 1522	EP (-B) EP (-B)	15 15	
72.5	336	34.3	4810 7700	490 785	87.5	279	28.4	4610 7350	470 750	1.23 1.83		4 4	1521 1633	EP (-B) EP (-B)	20 20	C2 ~ C3 C4 ~ C5
58.0	420	42.9	5100 8090	520 825	70.0	348	35.5	4900 7750	500 790	1.23 1.83		4 4	1521 1633	EP (-B) EP (-B)	25 25	C2 ~ C3 C4 ~ C5
48.3	504	51.4	8380	855	58.3	418	42.6	8090	825	1.23 1.83		4 4	1632 1633	EP (-B) EP (-B)	30 30	C4 ~ C5
36.3	673	68.6	8830	900	43.8	557	56.8	8480	865	1.23 1.83		4 4	1632 1633	EP (-B) EP (-B)	40 40	
29.0 24.2	841 1010	85.7 103	9120 9410	930 960	35.0 29.2	697 836	71.0 85.2	8880 9170	905 935	1.23 1.23		4 4	1632 1632	EP (-B) EP (-B)	50 60	

3.7 kW

Frequency	Hz	50Hz	60Hz
Number of motor poles	P	4	
Motor speed n_1	r/min	1450	1750

50Hz					60Hz					SF	Nomenclature					Dimension Drawing Page
Output Speed n2	Output Torque Tout		Allowable Radial Load Pro		Output Speed n2	Output Torque Tout		Allowable Radial Load Pro				Input Capacity Symbol	Frame Size	Aux. Spec.	Reduction Ratio	
rpm	N.m	kgf.m	N	Kgf	rpm	N.m	kgf.m	N	Kgf							
290	104	10.6	3140	320	350	85.9	8.76	2940	300	1.00 1.49	RNYM	5 5	1521 1522	EP (-B) EP (-B)	5 5	C2 ~ C3
207	145	14.8	3530	360	250	120	12.3	3330	340	1.00 1.49		5 5	1521 1522	EP (-B) EP (-B)	7 7	
145	207	21.1	3920	400	175	172	17.5	3730	380	1.00 1.49		5 5	1521 1522	EP (-B) EP (-B)	10 10	
121	249	25.4	4120	420	146	206	21.0	3970	405	1.00 1.49		5 5	1521 1522	EP (-B) EP (-B)	12 12	
96.7	311	31.7	4410	450	117	258	26.3	4220	430	1.00 1.49		5 5	1521 1522	EP (-B) EP (-B)	15 15	
72.5	415	42.3	4810 7700	490 785	87.5	344	35.0	4610 7350	470 750	1.00 1.49		5 5	1521 1633	EP (-B) EP (-B)	20 20	C2 ~ C3 C4 ~ C5
58.0	518	52.9	5100 8090	520 825	70.0	430	43.8	4900 7750	500 790	1.00 1.49		5 5	1521 1633	EP (-B) EP (-B)	25 25	C2 ~ C3 C4 ~ C5
48.3	622	63.4	8380	855	58.3	516	52.6	8090	825	1.00 1.49		5 5	1632 1633	EP (-B) EP (-B)	30 30	C4 ~ C5
36.3	830	84.6	8830	900	43.8	687	70.1	8480	865	1.00 1.49		5 5	1632 1633	EP (-B) EP (-B)	40 40	
29.0 24.2	1040 1240	106 127	9120 9410	930 960	35.0 29.2	859 1030	87.6 105	8880 9170	905 935	1.00 1.00		5 5	1632 1632	EP (-B) EP (-B)	50 60	

Selection Table

5.5 kW

Frequency	Hz	50Hz	60Hz
Number of motor poles	P	4	
Motor speed n_1	r/min	1450	1750

50Hz					60Hz					SF	Nomenclature					Dimension Drawing Page
Output Speed n2	Output Torque Tout		Allowable Radial Load Pro		Output Speed n2	Output Torque Tout		Allowable Radial Load Pro				Input Capacity Symbol	Frame Size	Aux. Spec.	Reduction Ratio	
rpm	N.m	kgf.m	N	Kgf	rpm	N.m	kgf.m	N	Kgf							
290	154	15.7	3140 5000	320 510	350	128	13.0	2940 4760	300 485	1.00 2.00	RNYM	8 8	1522 1634	EP (-B) EP (-B)	5 5	C2 ~ C3 C4 ~ C5
207	216	22.0	3530 5590	360 570	250	179	18.2	3330 5250	340 535	1.00 2.00		8 8	1522 1634	EP (-B) EP (-B)	7 7	C2 ~ C3 C4 ~ C5
145	308	31.4	3920 6230	400 635	175	255	26.0	3730 5930	380 605	1.00 2.00		8 8	1522 1634	EP (-B) EP (-B)	10 10	C2 ~ C3 C6
121	370	37.7	4120 6620	420 675	146	307	31.3	3970 6330	405 645	1.00 2.00		8 8	1522 1634	EP (-B) EP (-B)	12 12	C2 ~ C3 C6
96.7	462	47.2	4410 6960	450 710	117	383	39.1	4220 6670	430 680	1.00 2.00		8 8	1522 1634	EP (-B) EP (-B)	15 15	C2 ~ C3 C6
72.5	617	62.9	7700	785	87.5	511	52.1	7350	750	1.00 2.00		8 8	1633 1634	EP (-B) EP (-B)	20 20	C4 ~ C5 C6
58.0	771	78.6	8090	825	70.0	639	65.1	7750	790	1.00 1.92		8 8	1633 1634	EP (-B) EP (-B)	25 25	C4 ~ C5 C6
48.3 36.3	925 1230	94.3 126	8380 8830	855 900	58.3 43.8	766 1020	78.1 104	8090 8480	825 865	1.00 1.00		8 8	1633 1633	EP (-B) EP (-B)	30 40	C4 ~ C5

7.5 kW

Frequency	Hz	50Hz	60Hz
Number of motor poles	P	4	
Motor speed n_1	r/min	1450	1750

50Hz					60Hz					SF	Nomenclature					Dimension Drawing
Output Speed n2	Output Torque Tout		Allowable Radial Load Pro		Output Speed n2	Output Torque Tout		Allowable Radial Load Pro				Input Capacity Symbol	Frame Size	Aux. Spec.	Reduction Ratio	
rpm	N.m	kgf.m	N	Kgf	rpm	N.m	kgf.m	N	Kgf							
290 207 145	210 294 420	21.4 30.0 42.9	5000 5590 6230	510 570 635	350 250 175	174 244 348	17.8 24.9 35.5	4760 5250 5930	485 535 605	1.47 1.47 1.47	RNYM	10 10 10	1634 1634 1634	EP (-B) EP (-B) EP (-B)	5 7 10	C6
101 96.7	504 631	51.4 64.3	6620 6960	675 710	146 117	418 522	42.6 53.3	6330 6670	645 680	1.47 1.47		10 10	1634 1634	EP (-B) EP (-B)	12 15	C6
72.5 58.0	841 1051	85.7 107	7700 8090	785 825	87.5 70.0	697 871	71.0 88.8	7350 7750	750 790	1.47 1.47		10 10	1634 1634	EP (-B) EP (-B)	20 25	C6

11 kW

Frequency	Hz	50Hz	60Hz
Number of motor poles	P	4	
Motor speed n_1	r/min	1450	1750

50Hz					60Hz					SF	Nomenclature					Dimension Drawing Page
Output Speed n2	Output Torque Tout		Allowable Radial Load Pro		Output Speed n2	Output Torque Tout		Allowable Radial Load Pro				Input Capacity Symbol	Frame Size	Aux. Spec.	Reduction Ratio	
rpm	N.m	kgf.m	N	Kgf	rpm	N.m	kgf.m	N	Kgf							
290 207 145	308 432 617	31.4 44.0 62.9	5000 5590 6230	510 570 635	350 250 175	255 358 511	26.0 36.5 52.1	4760 5250 5930	485 535 605	1.00 1.00 1.00	RNYM	15 15 15	1634 1634 1634	EP (-B) EP (-B) EP (-B)	5 7 10	C6
121 96.7 72.5	740 925 1233	75.4 94.3 126	6620 6960 7700	675 710 785	146 117 87.5	613 766 1022	62.5 78.1 104	6330 6670 7350	645 680 750	1.00 1.00 1.00		15 15 15	1634 1634 1634	EP (-B) EP (-B) EP (-B)	12 15 20	C6

C

HYPONIC® Drive

Gearmotor

Dimension Drawing

Precautions

1. The dimension values described in this catalog dimension drawing are the maximum dimensions considering the asperities of each part excluding the shaft diameter and major installation parts. Therefore, they may be a little different from the actual product dimensions.
2. For the dimensions of the parts not described in the dimension drawing, please consult us.
3. This catalog dimension drawing may be changed without notice to customers.
4. For the dimensions of your product, please confirm the manufacturing specification which we will provide.

Dimension Drawing

Hyponic Gearmotor with IE3 Motors
(Frame size #1310 - #1522, Motor power 0.75 - 5.5kW)

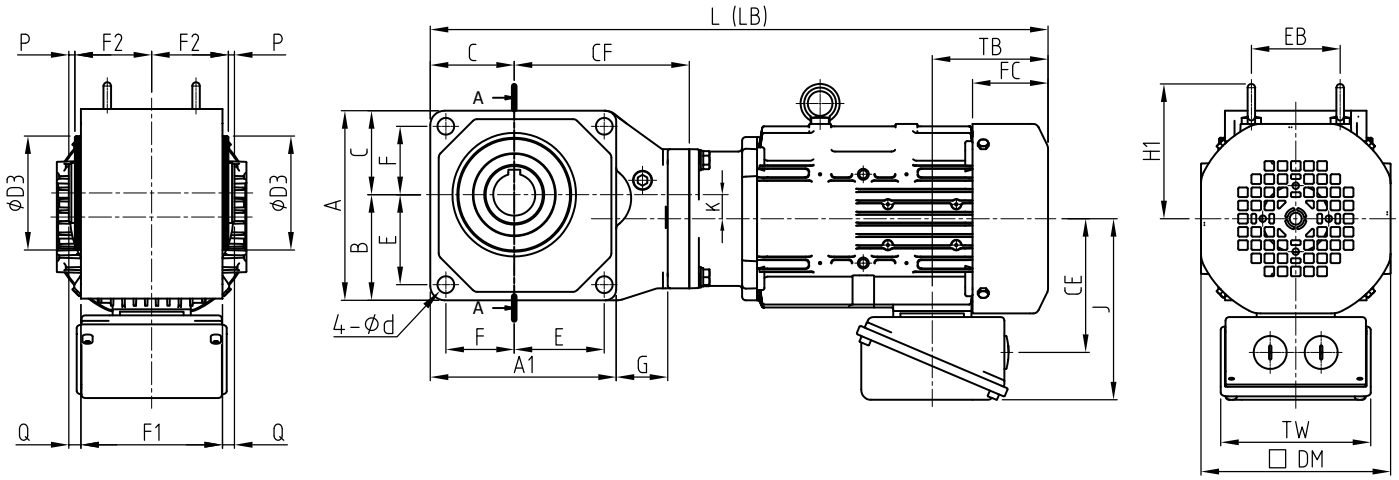

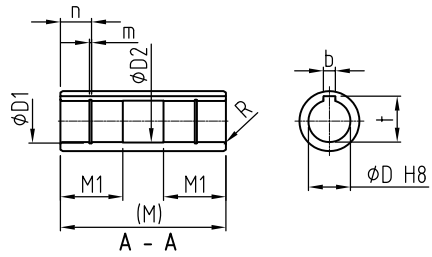

Refer to page C7 for optional bore diameters and detail dimensions of output bore.

Hyponic Frame	A	A1	B	C	E	F F1 F2	G	K	P Q1	D D1 D2	b t	M M1	n m	R	D3	CF
1310	112	112	56	56	44	44 92 46	2	17	5 9	30 31.4 30.6	8 33.3	110 46	22 1.35	1.5	85	76
1320	132	130	74	58	62	46 112 46	34	27.5	5 9	30 31.4 30.6	8 33.3	110 46	22 1.35	1.5	85	119
1410	132	132	66	66	55	57 118 59	4	22	5 10	35 37 35.6	10 38.3	138 52	26 1.75	1.5	95	90
1420	158	155	88	70	75	57 118 59	43	20	5 10	35 37 35.6	10 38.3	138 52	26 1.75	1.5	95	146
1510	154	154	77	77	65	65 136 68	3	27	5 10	45 47.5 45.6	14 48.8	156 67	30 1.95	1.5	110	100
1520	178	175	94	84	80	70 150 68	68	28	5 10	45 47.5 45.6	14 48.8	156 67	30 1.95	1.5	110	178
1521	178	175	94	84	80	70 150 68	68	28	5 10	45 47.5 45.6	14 48.8	156 67	30 1.95	1.5	110	178
1522	178	175	94	84	80	70 150 68	68	28	5 10	45 47.5 45.6	14 48.8	156 67	30 1.95	1.5	110	178

Notes: 1. Output shaft diameter tolerance in accordance with JIS B 0401-1976 “H8”.
2. Output shaft keyway tolerance in accordance with JIS B 1301-1996 parallel key (Normal Grade).
3. Dimensions and Masses in the drawings are suject to change without notice.

Dimension Drawing

Hyponic Gearmotor with IE3 Motors (Frame size #1310 - #1522, Motor power 0.75 - 5.5kW)

IE3 Motor capacity kWx4P	Hyponic Frame	H1 EB	TB FC (Std)	TB FC (Brake)	CE J	DM TW	L (Std) L (Brake)	Weight (Std) Weight (Brake)
0.75	1310	112 74	97 63	160 127	111.5 151	158 125	431 495	20 25
	1320						464 527	21 26
	1420						515 578	25 30
	1520						545 608	32 37
1.1 1.5	1410	117 80	97 64	167 133	116 156	167 125	465 535	28 34
	1420						542 611	30 36
	1520						571 640	37 43
2.2	1510	125 103	115 66	193 144	130 170	184 125	512 590	44 51
	1520						592 670	49 56
	1521						592 670	50 57
3.0	1521	125 103	115 66	193 144	130 170	184 125	606 684	52 59
	1522						606 684	51 58
3.7	1521	153 120	118 69	208 159	157 199	222 125	627 717	61 72
	1522						627 717	60 71
5.5	1522	153 120	118 69	208 159	157 199	222 125	670 760	73 84

Notes: 1. Output shaft diameter dimensions: Dimension tolerance in accordance with JIS B 0401-1976 “H8”.
2. Output shaft keyway dimensions: Dimension tolerance in accordance with JIS B 1301-1996 parallel key (Normal Grade).
3. Dimensions and Masses in the drawings are suject t5o change without notice.

Dimension Drawing

Hyponic Gearmotor with IE3 Motors
(Frame size #1530 - #1640, Motor power 0.75 - 5.5kW)

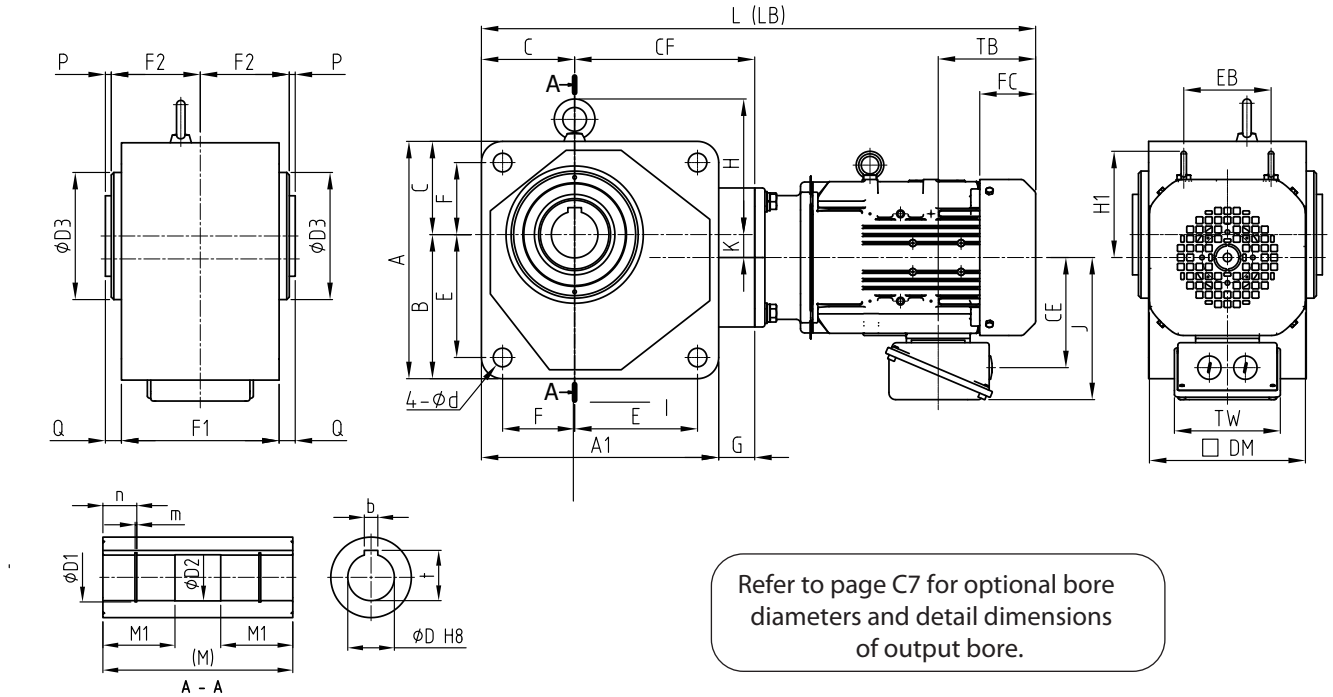

Refer to page C7 for optional bore diameters and detail dimensions of output bore.

Hyponic Frame	A	A1	B	C	E	F F1 F2	G H	K	P Q1	D D1 D2	b t	M M1	n m	R	D3	CF
1530	213	213	129	84	109	64 136 68	9.5 -	17	5 10	45 47.5 45.6	14 48.8	156 67	30 1.95	1.5	110	157
1531	213	213	129	84	109	64 136 68	9.5 -	17	5 10	45 47.5 45.6	14 48.8	156 67	30 1.95	1.5	110	157
1630	280	280	170	110	145	85 186 93	9.5 160	27	12 19	55 58 55.6	16 59.3	224 85	40 2.2	2.5	150	-
1631	280	280	170	110	145	85 186 93	9.5 160	27	12 19	55 58 55.6	16 59.3	224 85	40 2.2	2.5	150	-
1632	280	280	170	110	145	85 186 93	9.5 160	27	12 19	55 58 55.6	16 59.3	224 85	40 2.2	2.5	150	-
1633	280	280	170	110	145	85 186 93	9.5 160	27	12 19	55 58 55.6	16 59.3	224 85	40 2.2	2.5	150	-
1640	280	280	170	110	145	85 186 93	9.5 160	27	12 19	55 58 55.6	16 59.3	224 85	40 2.2	2.5	150	-

Notes: 1. Output shaft diameter tolerance in accordance with JIS B 0401-1976 “H8”.
2. Output shaft keyway tolerance in accordance with JIS B 1301-1996 parallel key (Normal Grade).
3. Dimensions and Masses in the drawings are suject to change without notice.

Dimension Drawing

Hyponic Gearmotor with IE3 Motors (Frame size #1310 - #1522, Motor power 0.75 - 5.5kW)

IE3 Motor capacity kWx4P	Hyponic Frame	H1 EB	TB FC (Std)	TB FC (Brake)	CE J	DM TW	L (Std) L (Brake)	Weight (Std) Weight (Brake)
0.75	1530						540 603	33 38
	1531						540 603	33 38
	1630						604 667	55 60
	1631						616 679	56 61
	1640						645 709	74 79
1.1 1.5	1531	117 80	97 64	167 133	116 156	167 125	567 636	37 43
	1630						642 711	61 67
	1631						642 711	61 67
2.2	1531	125 103	115 66	193 144	130 170	184 125	571 649	46 53
	1630						654 732	68 75
	1631						654 732	66 73
	1632						657 735	70 77
3.0	1632	125 103	115 66	193 144	130 170	184 125	671 749	73 80
	1633						671 749	73 80
3.7	1632	153 120	118 69	208 159	157 199	222 125	689 779	83 94
	1633						689 779	83 94
5.5	1633	153 120	118 69	208 159	157 199	222 125	689 779	96 107

Notes: 1. Output shaft diameter tolerance in accordance with JIS B 0401-1976 “H8”.
2. Output shaft keyway tolerance in accordance with JIS B 1301-1996 parallel key (Normal Grade).
3. Dimensions and Masses in the drawings are suject to change without notice.

Dimension Drawing

Hyponic Gearmotor with IE3 Motors (Frame size #1634, Motor power 5.5 - 11kW)

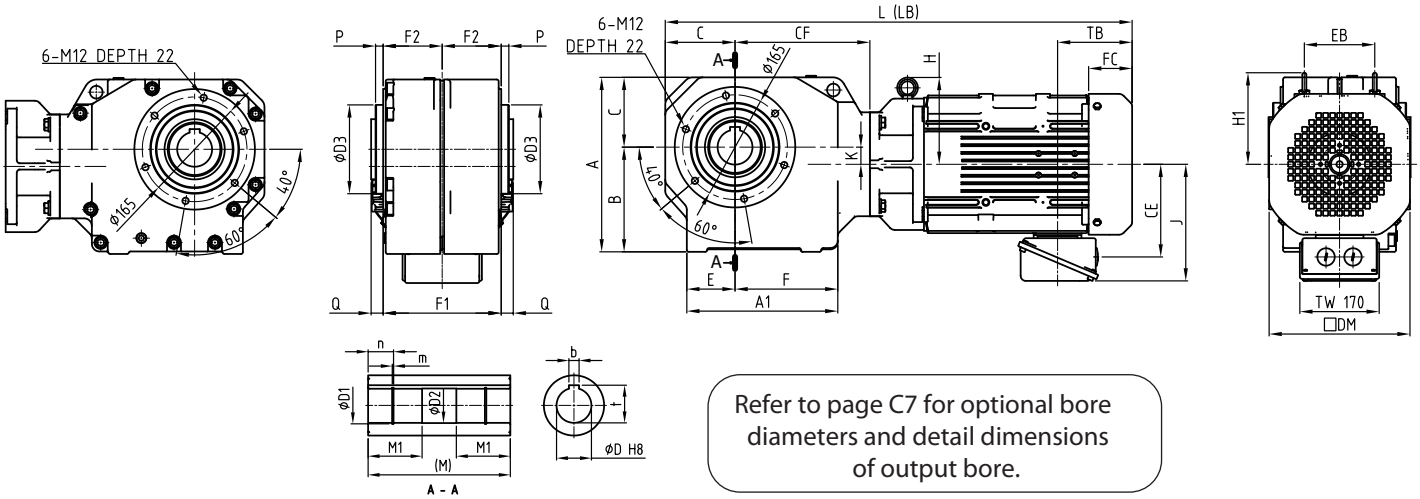

Refer to page C7 for optional bore diameters and detail dimensions of output bore.

Hyponic Frame	A	A1	B	C	E	F F1 F2	G H	K	P Q1	D D1 D2	b t	M M1	n m	R	D3	CF
1634	275	238	165	110	76	162 186 93	- 174	27	12 19	55 58 55.6	16 59.3	224 85	40 2.2	2.5	140	213

IE3 Motor capacity kWx4P	Hyponic Frame	H1 EB	TB FC (Std)	TB FC (Brake)	CE J	DM TW	L (Std) L (Brake)	Weight (Std) Weight (Brake)
5.5	1634	153 120	118 69	208 159	157 199	222 125	736 826	121 132
7.5	1634	- -	138 92	243 197	183 235	260 170	754 859	137 157
11	1634	- -	138 92	243 197	183 235	260 170	816 921	155 175

Notes: 1. Output shaft diameter tolerance in accordance with JIS B 0401-1976 “H8”.
2. Output shaft keyway tolerance in accordance with JIS B 1301-1996 parallel key (Normal Grade).
3. Dimensions and Masses in the drawings are suject to change without notice.

Detailed Dimension

Output Shaft Bore Size

Frame size	Bore (mm)									
	15	20	25	30	35	38	40	45	50	55
1310, 1320		○	○	●						
1410, 1420			○	○	●					
1510, 1520, 1521, 1522, 1530, 1531				○	○	○	○	●		
1630, 1631, 1632, 1633, 1634, 1640							○	○	○	●

● Standard
○ Semi-standard
(Contact us for price and delivery)

Output Shaft Dimensions

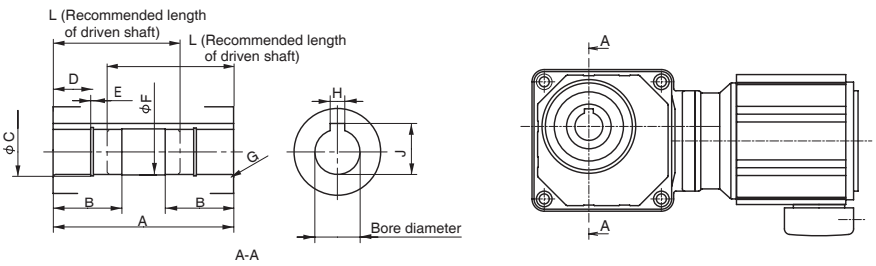

(mm)

Frame size	Bore	A	B	C	D	E	F	G	H	J	L	Effective length of driven shaft
1310, 1320	20	110	31	21	15	1.15	20.6	R1.5	6	22.8	85	75
	25	110	38	26.2	22	1.35	25.6	R1.5	8	28.3	78	55
	30	110	46	31.4	22	1.35	30.6	R1.5	8	33.3	71	45
1410, 1420	25	138	38	26.2	22	1.35	25.6	R1.5	8	28.3	106	80
	30	138	46	31.4	22	1.35	30.6	R1.5	8	33.3	99	65
	35	138	52	37	26	1.75	35.6	R1.5	10	38.3	93	50
1510, 1520, 1521, 1522, 1530, 1531	30	156	46	31.4	22	1.35	30.6	R1.5	8	33.3	117	115
	35	156	52	37	26	1.75	35.6	R1.5	10	38.3	111	100
	38	156	58	40	26	1.75	38.6	R1.5	10	41.3	111	90
	40	156	60	42.5	30	1.95	40.6	R1.5	12	43.3	108	85
	45	156	67	47.5	30	1.95	45.6	R1.5	14	48.8	104	70
1630, 1631, 1632, 1633, 1634, 1640	40	224	60	42.5	30	1.95	40.6	R1.5	12	43.3	172	155
	45	224	67	47.5	30	1.95	45.6	R1.5	14	48.8	172	120
	50	224	76	53	30	2.2	50.6	R1.5	14	53.8	169	110
	55	224	85	58	40	2.2	55.6	R2.5	16	59.3	159	90

Keyway dimensions in accordance with JIS B 1301-1996 parallel key (Normal Grade). Bore dimension tolerance in accordance with JIS B 0401-1976 "H8".

Notes

D

TECHNICAL DATA

HYPONIC® Drive Technical Data

Page

Rotation Directions

Hyponic with Premium Efficiency (IE3) Motors

Motor shaft will be rotating counterclockwise looking from the fan cover side when wire is connected as shown in connection figures in page G16 -G19.

The direction of the output shaft rotation is shown in the arrows of below diagrams.

Frame size	Reduction ratio	Frame size	Reduction ratio
1310	—	1310	5, 7, 10
1320	5, 7, 10, 12, 15, 20, 25, 30, 40, 50, 60	1320	—
1410	—	1410	5, 7, 10
1420	5, 7, 10, 12, 15, 20, 25, 30, 40, 50, 60	1420	—
1510	—	1510	5, 7, 10
1520	5, 7, 10, 12, 15, 20, 25, 30, 40, 50, 60	1520	—
1521	5, 7, 10, 12, 15, 20, 25	1522	5, 7, 10, 12, 15
1530	—	1530	80, 100, 120, 150, 200, 240
1531	—	1531	40, 50, 60, 80
1630	—	1630	80, 100, 120
1631	—	1631	150, 200, 240
1632	30	1632	40, 50, 60
1633	20, 25	1633	30, 40
1634	5, 7, 10, 12, 15	1634	20, 25
1640	300, 360, 480, 600, 720, 900, 1200, 1440	1640	—

RNYM series

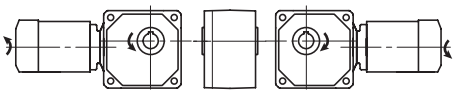

RNYM series

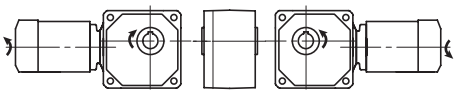

Actual Reduction Ratio

Actual Reduction Ratio of RNYM series (Reduction raito: 5~240)

Frame size	Reduction ratio																		
	5	7	7.5	10	12	15	20	25	30	40	50	60	80	100	120	150	160	200	240
1310	5.00	7.00		10.00															
1410	5.00	7.00		10.00															
1510	5.00	7.00		10.00															
1320	5.00	7.03		9.81	11.74	15.26	20.67	24.62	30.00										
1420	5.00	6.97		10.00	11.96	14.75	19.69	25.00	30.45	39.38	50.00	60.91							
1520	5.00	7.03		9.81	11.74	15.26	20.67	24.62	30.00	41.33	49.23	60.00							
1521	5.00	7.03		9.81	11.74	15.26	20.67	24.62											
1522	5.06	7.00		10.00	12.21	15.25													
1530													79.63	101.32	119.17	149.65		188.57	232.25
1531										39.20	49.88	57.60	77.42						
1630													80.50	102.94	119.00				
1631																154.41		195.42	244.07
1632									29.24	41.16	49.00	56.35							
1633							20.88	24.33	29.40	40.25									
1634	4.90	7.13		10.02	11.97	15.09	20.07	25.29											

Actual Reduction Ratio of RNYM series (Reduction raito: 300~1440)

Frame size	Reduction ratio							
	300	360	480	600	720	900	1200	1440
1640	297.68	350.10	475.66	605.28	711.87	907.91	1144.07	1396.15

Note: The values in the tables are subject to change without notice.

Mounting and Torque Arm

Mounting on driven shaft

- Apply molybdenum disulfide to the surface of the driven shaft and the inside of the hollow shaft, and insert Hyponic Drive onto the driven shaft.
- When engagement is too tight, lightly strike on the end of the hollow output shaft with a mallet. Never strike on the casing. It is recommended to make a jig shown on the right for smooth insertion.

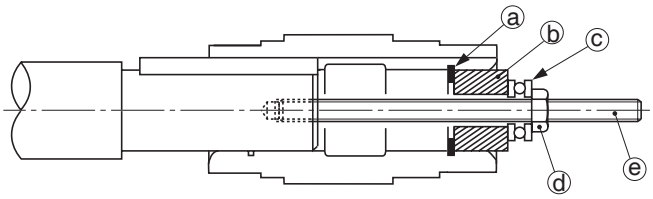

a ·····Retaining ring
b ·····Spacer
c ·····Thrust bearing
d ·····Nut
e ·····Double-end threaded bolt

- The hollow shaft dimension tolerance is in accordance with JIS "H8". The recommended tolerance for the driven shaft is :
  uniform load without impact·····JIS h6 or js6
  shock load or large radial load·····JIS js6 or k6
- Snap ring size is in accordance with JIS B2804C.

Hyponic Drive must be secured to driven shaft

a) How to secure Hyponic Drive not to move to the machine side (See below Figs)

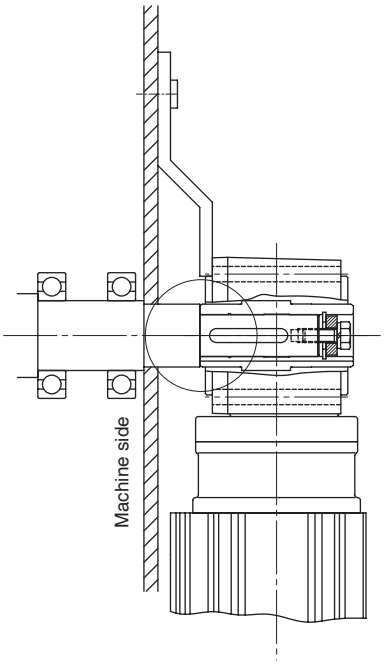

Secured by staged shaft

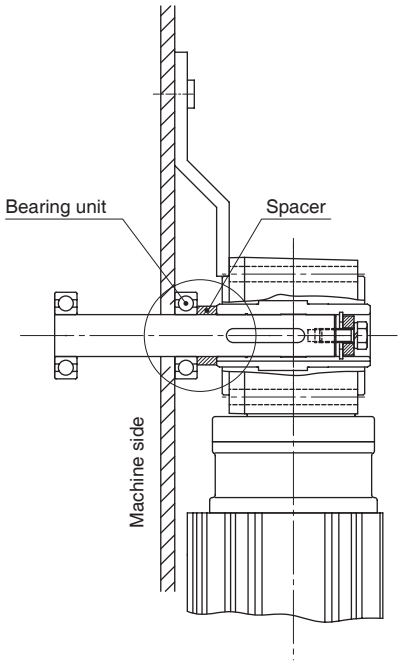

Secured by spacer (stageless driven shaft)

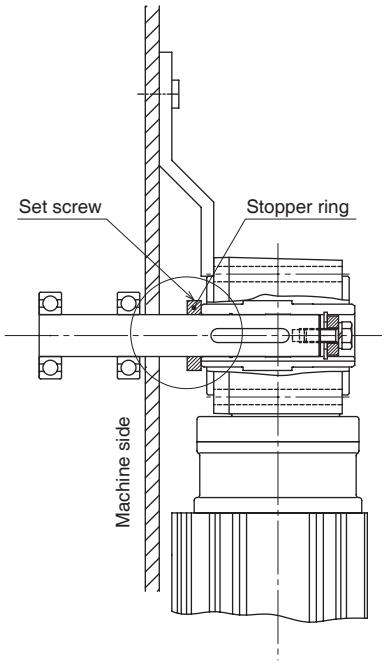

Secured by a set screw and a stopper (stageless driven shaft)

Mounting and Torque Arm

b) Mounting the Hyponic Drive on the machine (Figs. 1 - 3)

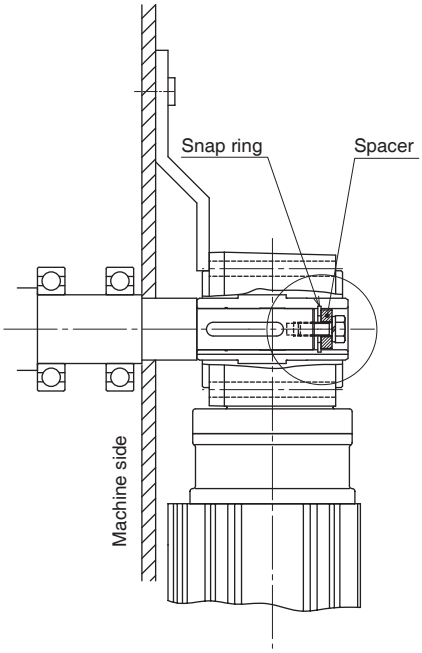

Fig. 1 secured by a spacer and a snap ring

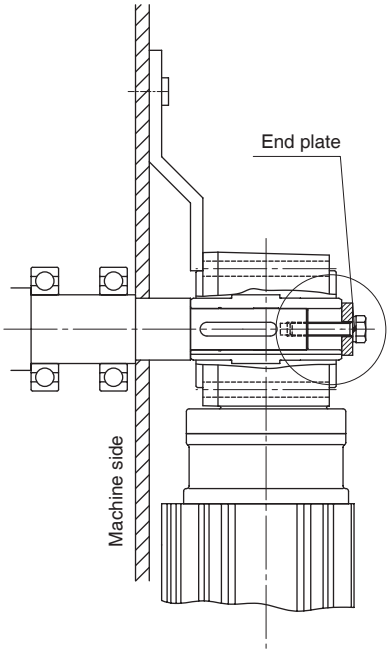

Fig. 2 secured by an end plate

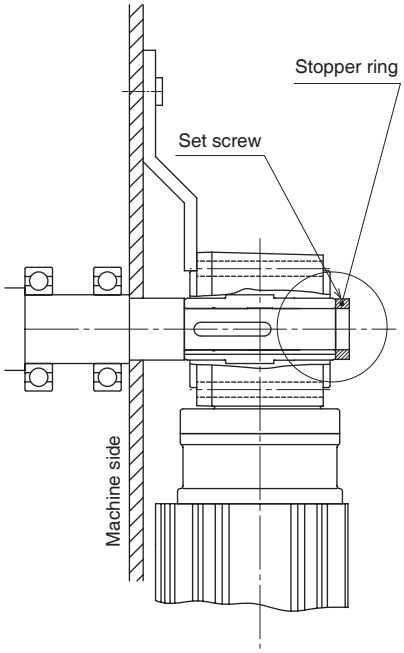

Fig. 3 secured by a set screw and a stopper ring

Torque Arm whirl stop

Attach the torque arm to Hyponic Drive casing on the machine side with hex socket head cap screws. (Refer to the table below for sizes of the bolts.).
Leave some allowance in the section of torque arm whirl stop so that excessive force will not be applied between Hyponic Drive and the driven shaft. Don't secure the torque arm with the whirl stop bolt. Or it may damage the whirl stop bolt, the torque arm, Hyponic Drive, or the machine.
In case of frequent start/stop operations, or repeated normal/reverse operations, use a rubber bush between the torque arm and mounting bolt (or spacer) to absorb the shock.

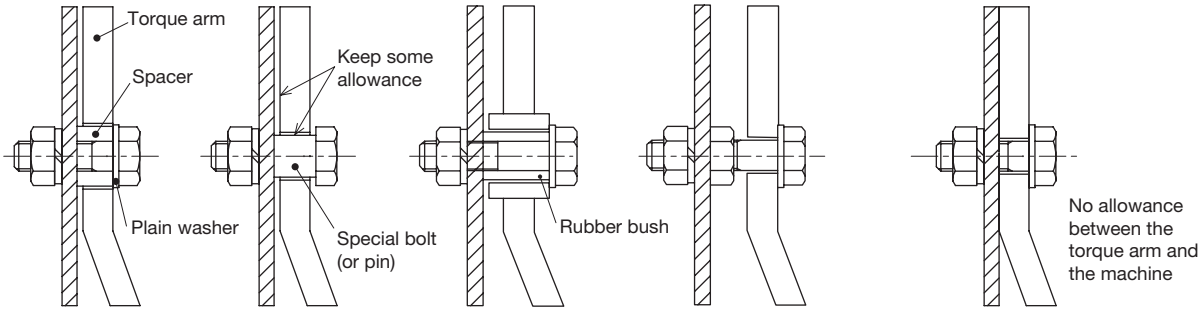

(Adjust the allowance according to the movement of the machine)
Good

(Excessive force on the whirl stop bolt, machine, and Hyponic Drive may cause damage)
Not recommended

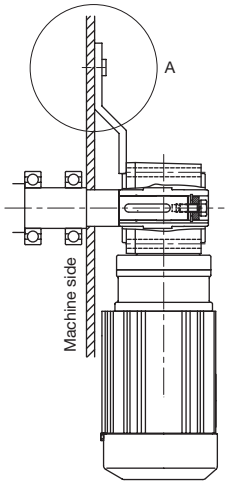

Example of whirl stop mounting (Section A)

Frame size	Bolt
1310, 1320	M10
1410, 1420, 1510, 1520, 1521, 1522, 1634	M12
1530,1531	M16
1630, 1631, 1632, 1633, 1640	M20

Mounting and Torque Arm

Removal from a driven shaft

Handle with care so that excessive force will not be applied between the casing and the hollow shaft. It is recommended to mkae a jig as shown on the right, for easy removal

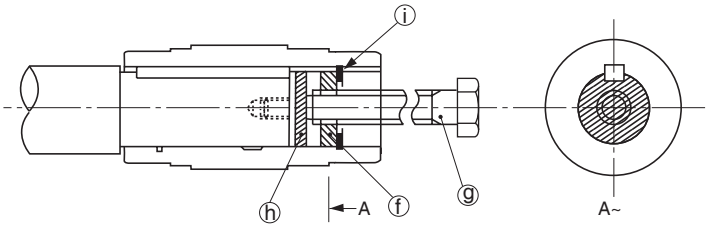

f ····· Spacer
g ····· Upper bolt
h ····· Disc
i ····· Snap ring

Note:
Parts for mounting, securing, and removal should be provided by the customer.

Flange mounting and casing bottom mounting (optional)

Handle with care in order not to apply excessive force to driven shaft or hollow shaft by twisting the Hyponic casing.

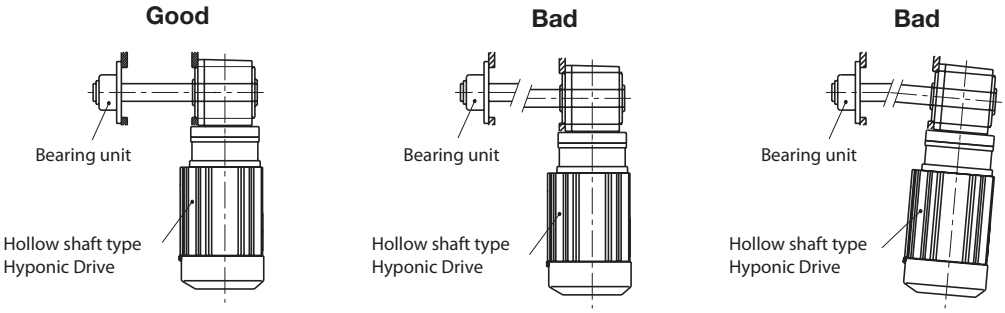

Flange mounting surface

(Poor concentricity of the driven shaft and mounting faucet)

(Poor perpendicularity of the driven shaft center and mounting flange surface)

(Excessive force on Hyponic and the bearing may cause damage on inner parts)

Mounting and Torque Arm

Torque Arm Designs

- Refer to this page for standard torque arm designs, used for continuous operations or infrequent start/stop.
- Refer to page D8 and D9 when designing torque arm on your own, or when start/stop is frequent.
- Mount torque arm to reducer casing using 4 bolts.

Standard Torque Arm designs

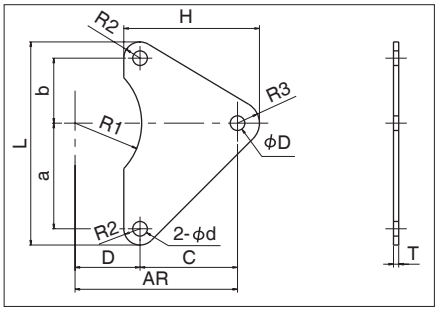

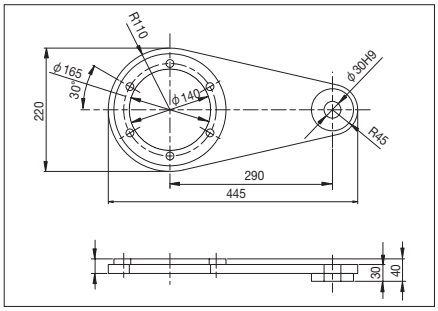

(For 1634)

Dimensions

Frame size	a	b	C	D	H	L	d1	d2	R1	R2	R3	T
1310	44	44	76	44	108	110	11	14	44.5	11	21	4.5
1410	55	55	85	55	123	132	11	18	49.5	11	27	6
1510	65	65	85	65	130	154	11	22	57	12	33	9
1320	62	46	74	46	107	132	11	14	44.5	12	21	4.5
1420	75	57	83	57	123	158	14	18	49.5	13	27	6
1520, 1521, 1522	80	70	80	–	127	178	14	22	–	14	33	9
1530, 1531	109	64	136	64	181	209	18	18	60	18	27	9
1630, 1631, 1632, 1633, 1640 1634	145	85	195	85	250	274	22	22	80	22	33	12

Assembly Examples

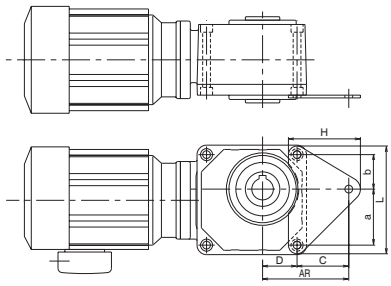

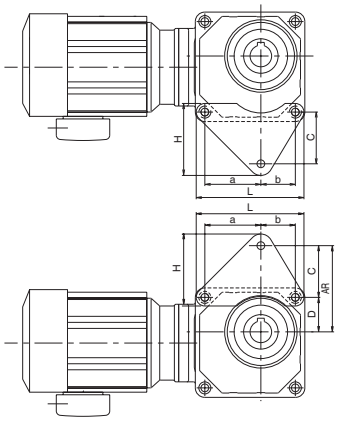

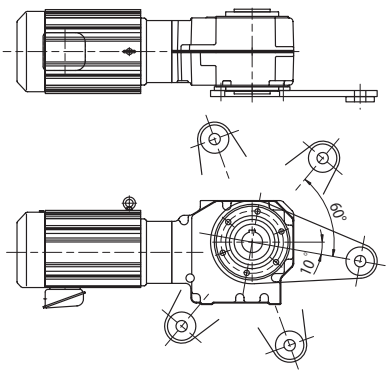

(For 1634)

Notes:
· Use torque arm only for whirl stop function.
· Fasten reducer at driven shaft for fixing in axial direction.

Mounting and Torque Arm

Check the strength of Torque Arm and driven shaft and the lifetime of the bearing

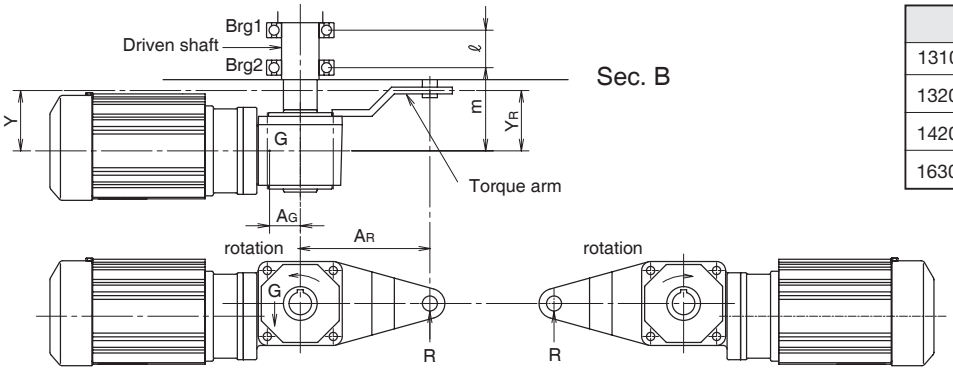

(m)

Frame size	A_G
1310	0.15
1320, 1410, 1510	0.2
1420, 1520, 1530, 1531, 1640	0.25
1630, 1631, 1632, 1633	0.30

approximate values

1. Torque arm load : $R = \frac{T + A_G \cdot G}{A_R}$

2. Brg.1 load : $B1 = \frac{m\,(R-G) - Y_R \cdot R}{R}$

3. Brg.2 load : $B2 = \frac{(R+m)\,(R-G) - Y_R \cdot R}{R}$

4. Sec. B of driven shaft

: $M = Y_R \cdot R - Y\,(R-G) \quad 0 < Y \leqq m$

T : Output torque [N·m]
G : Hyponic Drive gravity [N]
R : Torque arm load [N]
A^G : Distance between the centers of the driven shaft and gravity [m]
A^R : Distance from driven shaft center to torque arm whirl stop [m]
Y^R : Distance from the center of Hyponic Drive to torque arm whirl stop [m]
m : Distance from the center of Hyponic Drive to Brg 2 [m]
R : Distance between Brg.1 and Brg.2 [m]
Y : Distance between the center of Hyponic Drive and Sec. B [m]

Note: Output torque is (+) on the shown rotation, and (-) on the opposite rotation.

Recommended dimensions of Torque Arm design

(mm)

Frame size	Length	Bore	Whirl stop bore	Mounting pitches			Mounting bore	Thickness
	A_R	H	D	a	b	c	d	
1310	120	87	14	44	44	—	11	4.5
1320	120	87	14	62	46	—	11	4.5
1410	140	97	18	55	55	—	11	6
1420	140	97	18	75	57	—	14	6
1510	150	112	18	65	65	—	11	9
1520	150	112	22	80	70	—	14	9
1530, 1531	200	112	18	109	64	—	18	9
1630,1631,1632,1633,1640	280	152	22	145	85	—	22	12
1634	290	142	33	165	20°	60°	14	16

Mounting and Torque Arm

Torque Arm mountings and designs

	1	2	3	4
Mounting examples	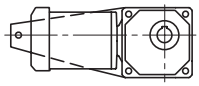	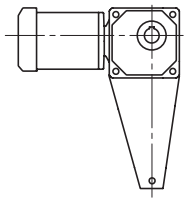	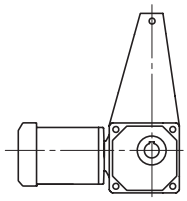	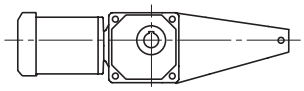

Drawing examples	1320 1420 1520 1530, 1531	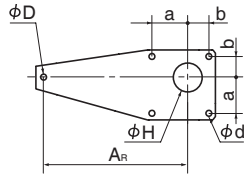		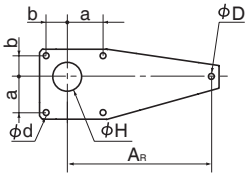	
Drawing examples	1634	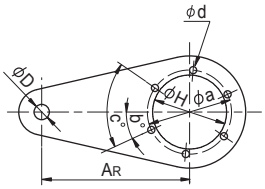	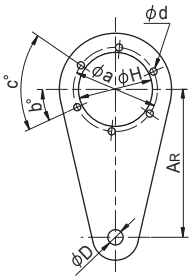	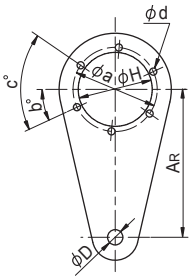	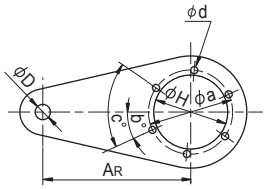

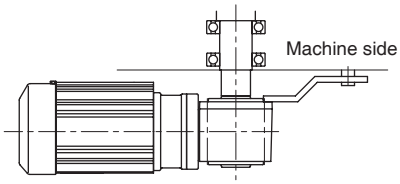

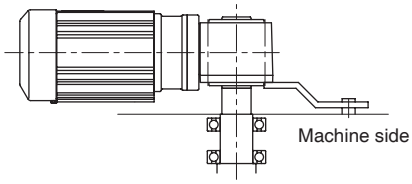

Attach the torque arm to the casing on the machine side.

Mounting and Torque Arm

Safety Cover

- It may be mounted on either the left or right side.
- Made of plastics

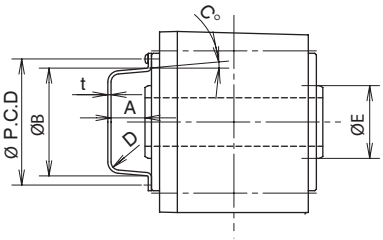

(mm)

Dimensions / Frame size	Safety cover								Output shaft end
	A	B	C°	D	t	P.C.D	N	M×P×L	E
1310, 1320	21	67	5	R5	2	78	2	M3×0.5×6	45
1410, 1420	30	77	5	R5	2	88	2	M3×0.5×6	55
1510, 1520, 1521, 1522, 1530, 1531	30	90	5	R5	2	103	2	M3×0.5×6	65
1630, 1631, 1632, 1633, 1640	40	114	5	R5	2	135	2	M5×0.8×10	95
1634	40	114	5	R5	1.2	130	2	M5×0.8×10	95

M : Screw size P : Thread pitch L : Thread length P.C.D : Mounting pitch N : Q'ty
Note 1: The values are subject to change without notice.
Note 2: Contact us when safety covers are required.

Construction Drawing And Name Plate

■ Hollow shaft type example (RNYM1-1530-120)

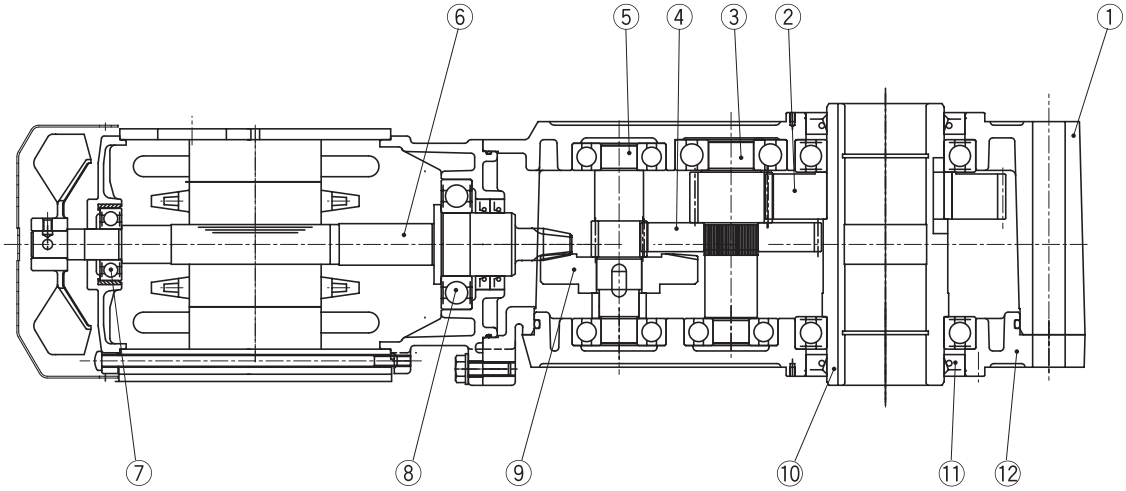

Part No.	Description	Part No.	Description	Part No.	Description	Part No.	Description
1	Casing (1)	4	Gear	7	Bearing	10	Output shaft
2	Gear	5	Pinion shaft	8	Bearing	11	Oil seal
3	Pinion shaft	6	Hypoid pinion shaft	9	Hypoid gear	12	Casing (2)

■ Name plate

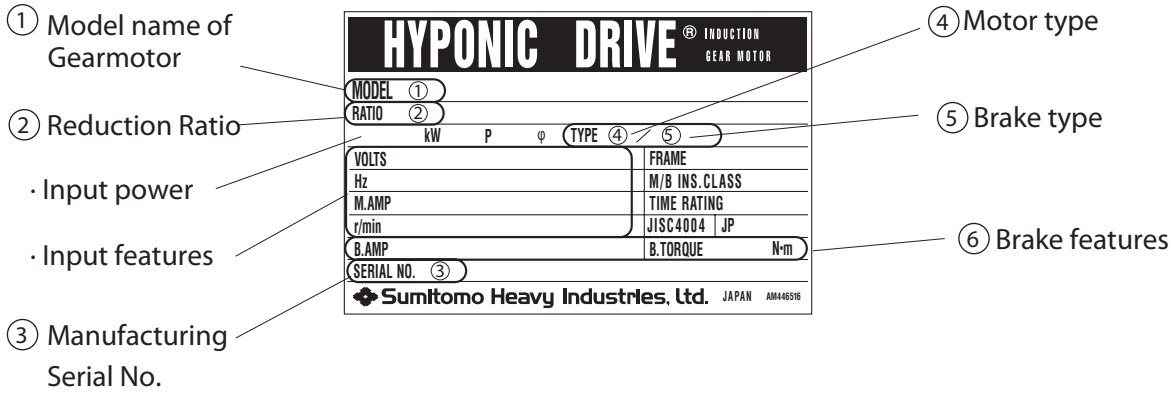

TECHNICAL DATA

Notes

PREST®NEO

E

Gearmotor

Selection Table

About the suffix and possibility to manufacture the motor

- EP : The premium-efficiency, 3-phase motor can be manufactured in combination with any frame sized of 0.75kW or higher.

Legend

- ● Can be manufactured as a standard product.
- △ Can be manufactured but the specifications have to be confirmed, so please consult us.
- □ Please consult us.
- — Cannot be manufactured.

Selection Table

0.75kW

Frequency Hz	50Hz	60Hz
Number of motor poles P	4	
Motor speed n_1 r/min	1450	1750

50Hz					60Hz					Nomenclature	Exact Ratio	Dimension Drawing Page	
Output Speed n2	Output Torque Tout		Allowable Radial Load Pro		Output Speed n2	Output Torque Tout		Allowable Radial Load Pro		Input Capacity Sumbol / Frame Size / Type / Reduction Ratio		ZNFM	ZNHM
r/min	N.m	kgf.m	N	Kgf	r/min	N.m	kgf.m	N	Kgf				
483	13.4	1.36	650	66	583	11.1	1.13	500	51	1 - 1280 (-B) - EP - 3	3.02	Fig D1 Page F2	Fig D2 Page F2
290	22.3	2.27	1270	130	350	18.4	1.88	1000	102	1 - 1280 (-B) - EP - 5	4.89		
145	46.5	4.74	2120	216	175	38.5	3.93	2120	216	1 - 1280 (-B) - EP - 10	10.32		
96.7	69.7	7.11	2600	265	117	57.8	5.89	2600	265	1 - 1280 (-B) - EP - 15	14.67		
72.5	93.0	9.48	2820	288	87.5	77.0	7.86	2820	288	1 - 1280 (-B) - EP - 20	20.00		
58.0	116	11.9	2940	300	70.0	96.3	9.82	2940	300	1 - 1280 (-B) - EP - 25	24.99		
48.3	139	14.2	3060	312	58.3	116	11.8	3060	312	1 - 1280 (-B) - EP - 30	29.33		
48.3	139	14.2	4830	493	58.3	116	11.8	4830	493	1 - 1321 (-B) - EP - 30	30.85	Fig D3 Page F3	Fig D4 Page F3
36.3	180	18.4	5430	554	43.8	149	15.2	5430	554	1 - 1321 (-B) - EP - 40	40.71		
29.0	225	22.9	6030	615	35.0	186	19.0	6030	615	1 - 1321 (-B) - EP - 50	50.46		
24.2	270	27.5	6590	672	29.2	224	22.8	6590	672	1 - 1321 (-B) - EP - 60	58.72		
18.1	360	36.7	7060	720	21.9	298	30.4	7060	720	1 - 1321 (-B) - EP - 80	77.99		
14.5	450	45.9	7060	720	17.5	373	38.0	7060	720	1 - 1321 (-B) - EP - 100	96.66		
14.5	450	45.9	8480	865	17.5	373	38.0	8480	865	1 - 1400 (-B) - EP - 100	101.39	Fig D5 Page F4	Fig D6 Page F4
12.1	540	55.1	8480	865	14.6	447	45.6	8480	865	1 - 1400 (-B) - EP - 120	115.35		
9.06	720	73.4	8480	865	10.9	597	60.8	8480	865	1 - 1400 (-B) - EP - 160	157.05		
7.25	*769	*78.4	8480	865	8.75	746	76.1	8480	865	1 - 1400 (-B) - EP - 200	196.12		

1.5kW

Frequency Hz	50Hz	60Hz
Number of motor poles P	4	
Motor speed n_1 r/min	1450	1750

50Hz					60Hz					Nomenclature	Exact Ratio	Dimension Drawing Page	
Output Speed n2	Output Torque Tout		Allowable Radial Load Pro		Output Speed n2	Output Torque Tout		Allowable Radial Load Pro		Input Capacity Sumbol / Frame Size / Type / Reduction Ratio		ZNFM	ZNHM
r/min	N.m	kgf.m	N	Kgf	r/min	N.m	kgf.m	N	Kgf				
483	26.7	2.72	1090	111	583	22.1	2.26	850	87	2 - 1320 (-B) - EP - 3	2.94	Fig D7 Page F5	Fig D8 Page F5
290	44.5	4.54	2070	211	350	36.9	3.76	1760	179	2 - 1320 (-B) - EP - 5	5.04		
145	93.0	9.48	2940	300	175	77.0	7.86	2940	300	2 - 1320 (-B) - EP - 10	10.38		
96.7	139	14.2	3500	357	117	116	11.8	3500	357	2 - 1320 (-B) - EP - 15	14.97		
72.5	186	19.0	4100	418	87.5	154	15.7	4100	418	2 - 1320 (-B) - EP - 20	19.88		
58.0	232	23.7	4590	468	70.0	193	19.6	4590	468	2 - 1320 (-B) - EP - 25	24.80		
48.3	279	28.4	4830	493	58.3	231	23.6	4830	493	2 - 1320 (-B) - EP - 30	29.04		
48.3	279	28.4	6120	624	58.3	231	23.6	6120	624	2 - 1401 (-B) - EP - 30	30.75	Fig D9 Page F6	Fig D10 Page F6
36.3	360	36.7	7060	720	43.8	298	30.4	7060	720	2 - 1401 (-B) - EP - 40	39.54		
29.0	450	45.9	7330	747	35.0	373	38.0	7330	747	2 - 1401 (-B) - EP - 50	49.07		
24.2	540	55.1	7720	787	29.2	447	45.6	7720	787	2 - 1401 (-B) - EP - 60	60.72		
18.1	720	73.4	7900	805	21.9	597	60.8	7900	805	2 - 1401 (-B) - EP - 80	82.67		
14.5	*769	*78.4	8480	865	17.5	746	76.1	8480	865	2 - 1401 (-B) - EP - 100	102.61		
14.5	900	91.8	11800	1203	17.5	746	76.1	11800	1203	2 - 1500 (-B) - EP - 100	101.74	Fig D11 Page F7	Fig D12 Page F7
12.1	1080	110	11800	1203	14.6	895	91.3	11800	1203	2 - 1500 (-B) - EP - 120	118.10		
9.06	*1230	*125	11800	1203	10.9	1193	122	11800	1203	2 - 1500 (-B) - EP - 160	159.21		
7.25	*1230	*125	11800	1203	8.75	*1230	*125	11800	1203	2 - 1500 (-B) - EP - 200	199.01		

Selection Table

2.2kW	Frequency Hz	50Hz	60Hz
	Number of motor poles P	4	
	Motor speed n_1 r/min	1450	1750

50Hz					60Hz					Nomenclature	Exact Ratio	Outline Dimension Fig	
Output Speed n2	Output Torque Tout		Allowable Radial Load Pro		Output Speed n2	Output Torque Tout		Allowable Radial Load Pro		Input Capacity Sumbol / Frame Size / Reduction Ratio		ZNFM	ZNHM
r/min	N.m	kgf.m	N	Kgf	r/min	N.m	kgf.m	N	Kgf				
483	39.2	3.99	1170	119	583	32.5	3.31	900	92	3 - 1400 (-B) - EP - 3	3.07	Fig D13 Page F8	Fig D14 Page F8
290	65.3	6.66	2230	227	350	54.1	5.52	1800	184	3 - 1400 (-B) - EP - 5	5.06		
145	136	13.9	3770	384	175	113	11.5	3770	384	3 - 1400 (-B) - EP - 10	9.78		
96.7	205	20.9	4500	459	117	169	17.3	4500	459	3 - 1400 (-B) - EP - 15	15.02		
72.5	273	27.8	5070	517	87.5	226	23.0	5070	517	3 - 1400 (-B) - EP - 20	20.44		
58.0	341	34.8	5640	575	70.0	282	28.8	5640	575	3 - 1400 (-B) - EP - 25	25.53		
48.3	409	41.7	6120	624	58.3	339	34.6	6120	624	3 - 1400 (-B) - EP - 30	29.33		
48.3	409	41.7	8360	852	58.3	339	34.6	8360	852	3 - 1501 (-B) - EP - 30	28.89	Fig D15 Page F9	Fig D16 Page F9
36.3	528	53.8	9510	970	43.8	438	44.6	9510	970	3 - 1501 (-B) - EP - 40	39.62		
29.0	660	67.3	10660	1087	35.0	547	55.8	10660	1087	3 - 1501 (-B) - EP - 50	48.15		
24.2	792	80.8	11800	1203	29.2	656	66.9	11800	1203	3 - 1501 (-B) - EP - 60	59.43		
18.1	1056	108	11800	1203	21.9	875	89.2	11800	1203	3 - 1501 (-B) - EP - 80	79.24		
14.5	*1230	*125	11800	1203	17.5	1094	112	11800	1203	3 - 1501 (-B) - EP - 100	96.30		

Selection Table

Notes

F

PREST®NEO

Gearmotor

Dimension Drawing

Precautions

1. The dimension values described in this catalog dimension drawing are the maximum dimensions considering the asperities of each part excluding the shaft diameter and major installation parts. Therefore, they may be a little different from the actual product dimensions.
2. For the dimensions of the parts not described in the dimension drawing, please consult us.
3. This catalog dimension drawing may be changed without notice to customers.
4. For the dimensions of your product, please confirm the manufacturing specification which we will provide.

Dimension Drawing

D1	ZNFM1-1280-EP-3~30 ZNFM1-1280-EP-B-3~30	Mass 20kg Mass 25kg

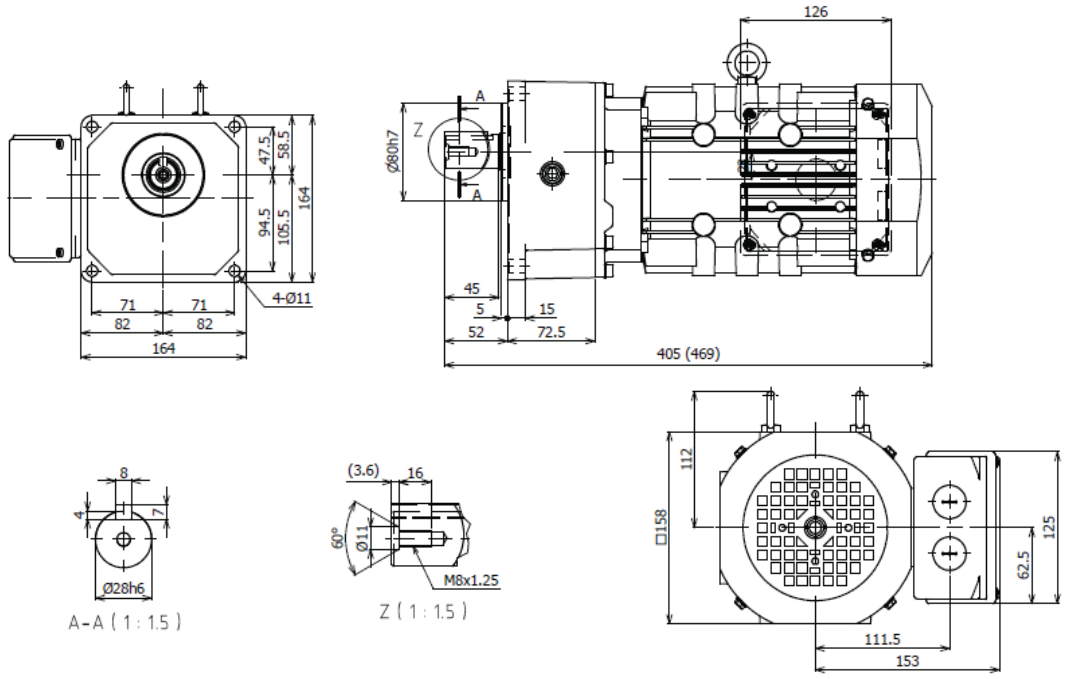

D2	ZNHM1-1280-EP-3~30 ZNHM1-1280-EP-B-3~30	Mass 20kg Mass 25kg

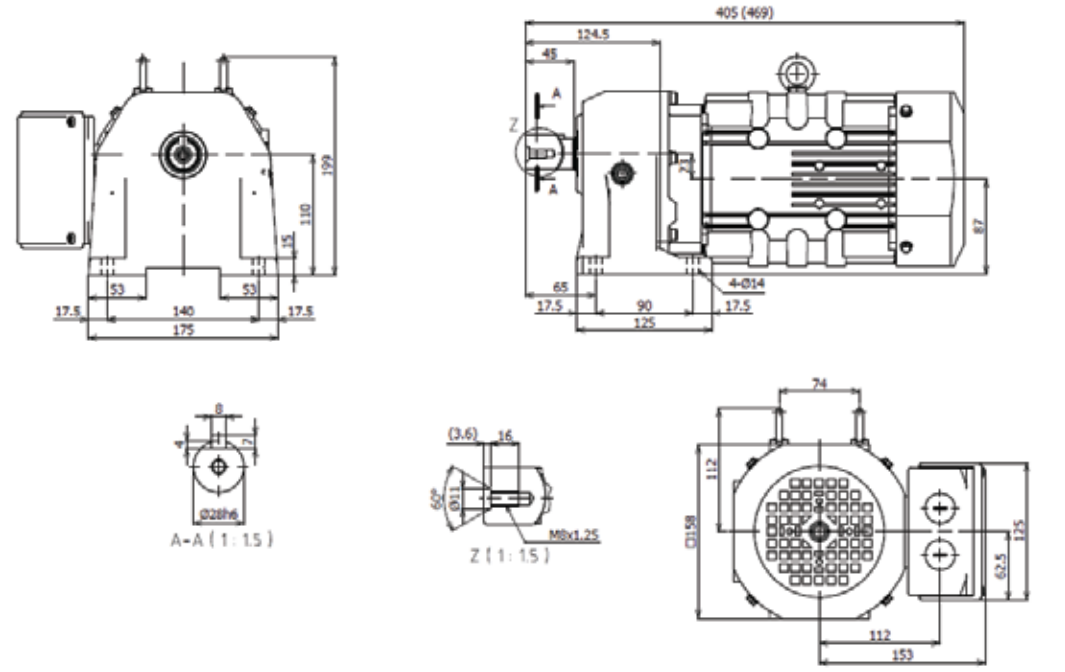

Note) 1. Output shaft diameter: Dimension tolerance compliant with the JIS B 0401-1998 "h6."
2. Shaft end key dimensions: Dimension tolerance compliant with the JIS B 1301-1996 "Parallel Keys."
3. For the detailed dimensions of the output shaft section, see Page C7.
4. The dimensions and masses in the dimensions drawings are subject to change without prior notice.
5. Values in parentheses indicate the type, dimensions and mass of the motor with brake.

Dimension Drawing

D3	ZNFM1-1321-EP-30~100 ZNFM1-1321-EP-B-30~100	Mass 24kg Mass 29kg

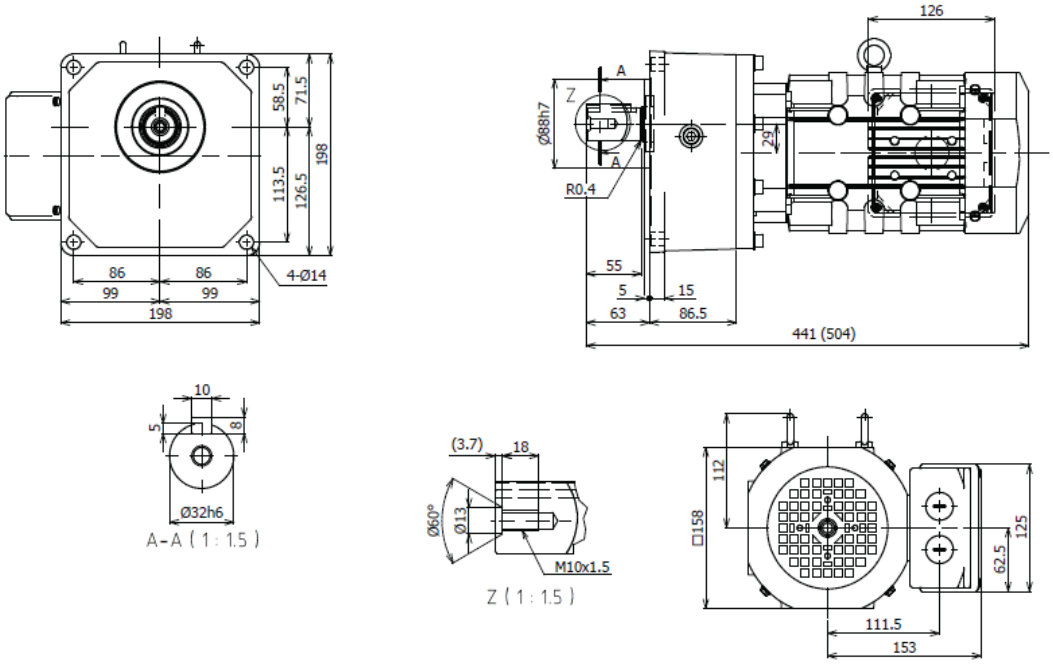

D4	ZNHM1-1320-EP-30~100 ZNHM1-1320-EP-B-30~100	Mass 24kg Mass 29kg

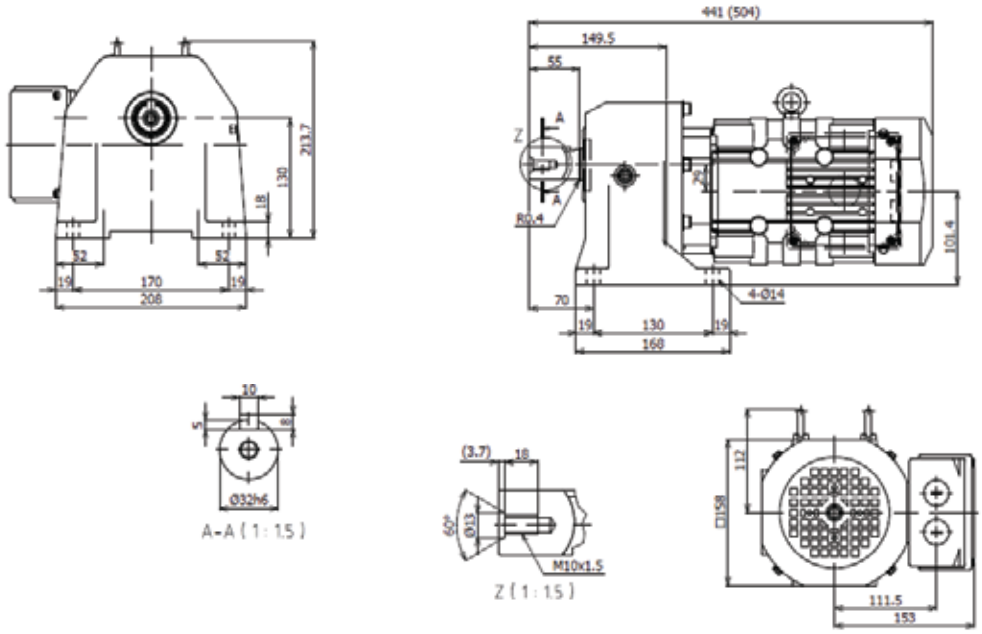

Note) 1. Output shaft diameter: Dimension tolerance compliant with the JIS B 0401-1998 "h6."
2. Shaft end key dimensions: Dimension tolerance compliant with the JIS B 1301-1996 "Parallel Keys."
3. For the detailed dimensions of the output shaft section, see Page C7.
4. The dimensions and masses in the dimensions drawings are subject to change without prior notice.
5. Values in parentheses indicate the type, dimensions and mass of the motor with brake.

Dimension Drawing

D5	ZNFM1-1401-EP-100~200 ZNFM1-1401-EP-B-100~200	Mass 29kg Mass 34kg

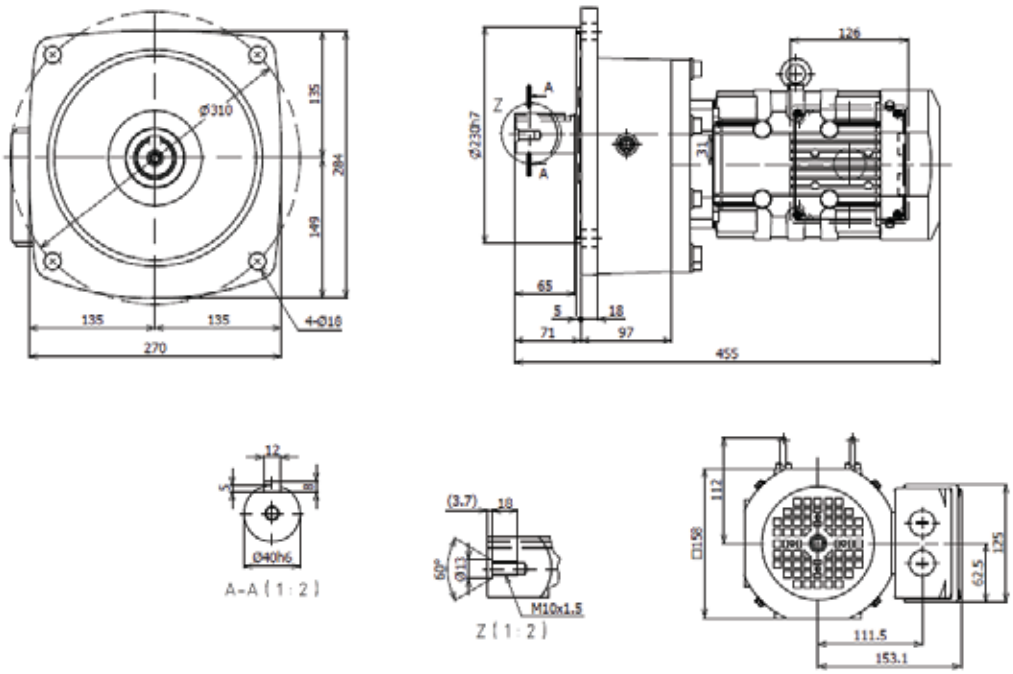

D6	ZNHM1-1401-EP-100~200 ZNHM1-1401-EP-B-100~200	Mass 29kg Mass 34kg

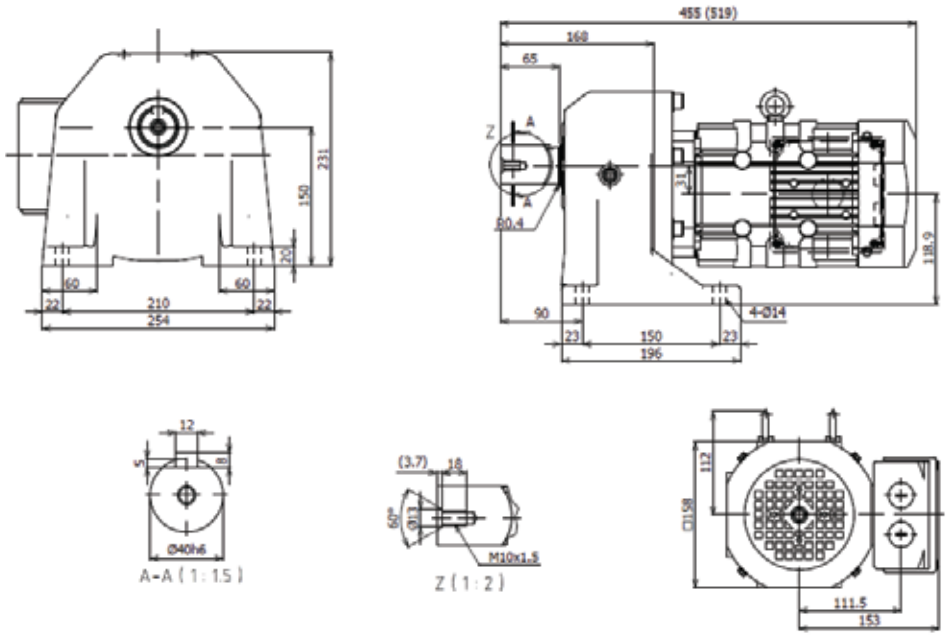

Note) 1. Output shaft diameter: Dimension tolerance compliant with the JIS B 0401-1998 "h6."
2. Shaft end key dimensions: Dimension tolerance compliant with the JIS B 1301-1996 "Parallel Keys."
3. For the detailed dimensions of the output shaft section, see Page C7.
4. The dimensions and masses in the dimensions drawings are subject to change without prior notice.
5. Values in parentheses indicate the type, dimensions and mass of the motor with brake.

Dimension Drawing

D7	ZNFM2-1320-EP-3~30 ZNFM2-1320-EP-B-3~30	Mass 28kg Mass 34kg

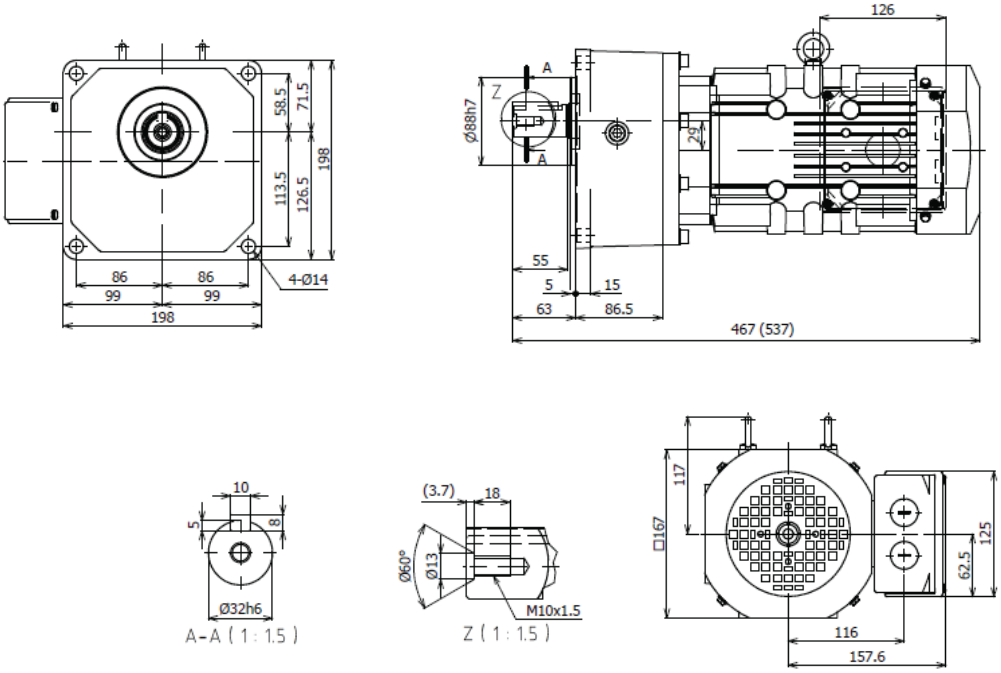

D8	ZNHM2-1320-EP-3~30 ZNHM2-1320-EP-B-3~30	Mass 29kg Mass 35kg

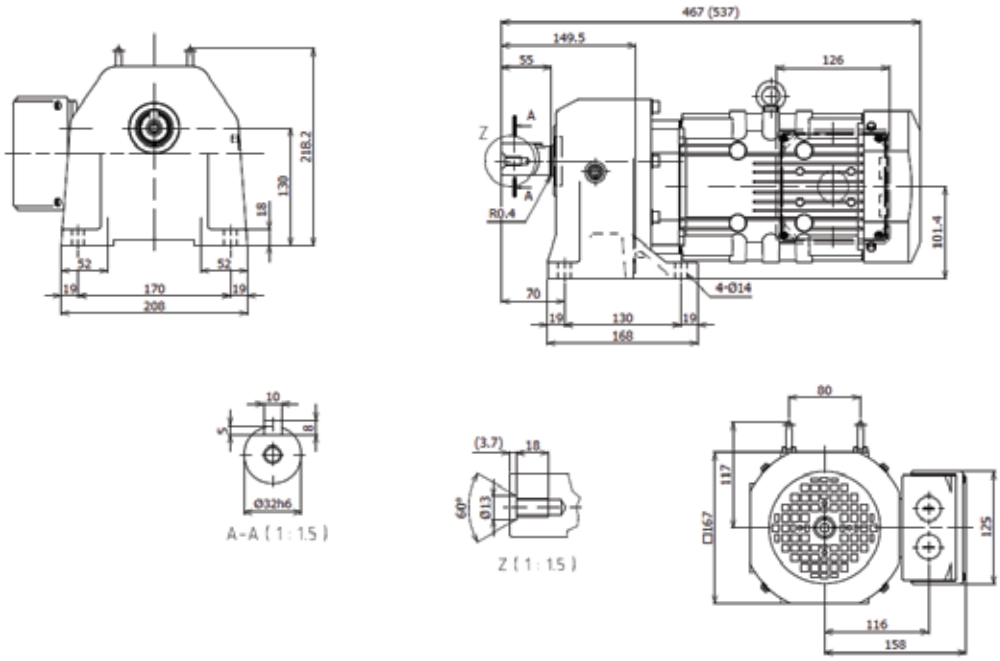

Note) 1. Output shaft diameter: Dimension tolerance compliant with the JIS B 0401-1998 "h6."
2. Shaft end key dimensions: Dimension tolerance compliant with the JIS B 1301-1996 "Parallel Keys."
3. For the detailed dimensions of the output shaft section, see Page C7.
4. The dimensions and masses in the dimensions drawings are subject to change without prior notice.
5. Values in parentheses indicate the type, dimensions and mass of the motor with brake.

Dimension Drawing

D9	ZNFM2-1401-EP-30~100 ZNFM2-1401-EP-B-30~100	Mass 61kg Mass 67kg

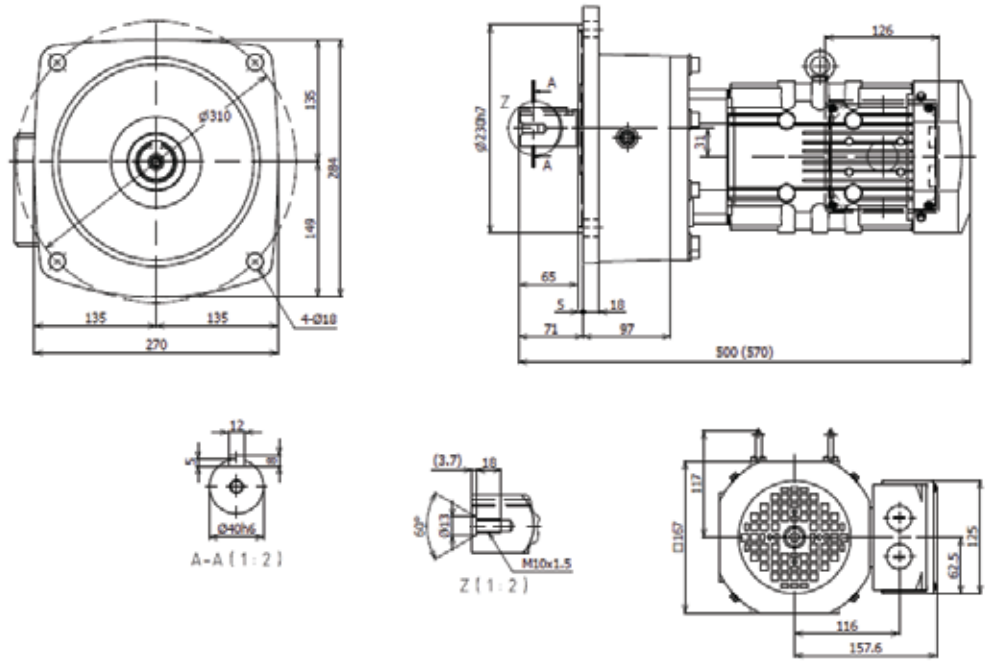

D10	ZNHM2-1401-EP-30~100 ZNHM2-1401-EP-B-30~100	Mass 35kg Mass 41kg

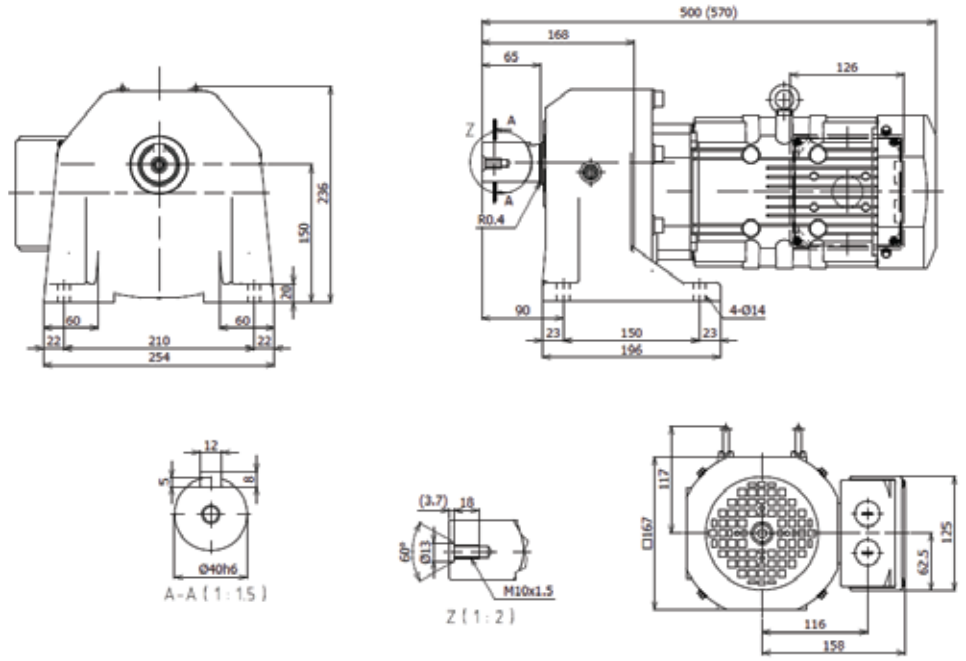

Note) 1. Output shaft diameter: Dimension tolerance compliant with the JIS B 0401-1998 "h6."
2. Shaft end key dimensions: Dimension tolerance compliant with the JIS B 1301-1996 "Parallel Keys."
3. For the detailed dimensions of the output shaft section, see Page C7.
4. The dimensions and masses in the dimensions drawings are subject to change without prior notice.
5. Values in parentheses indicate the type, dimensions and mass of the motor with brake.

Dimension Drawing

D11	ZNFM2-1500-EP-100~200 ZNFM2-1500-EP-B-100~200	Mass 61kg Mass 67kg

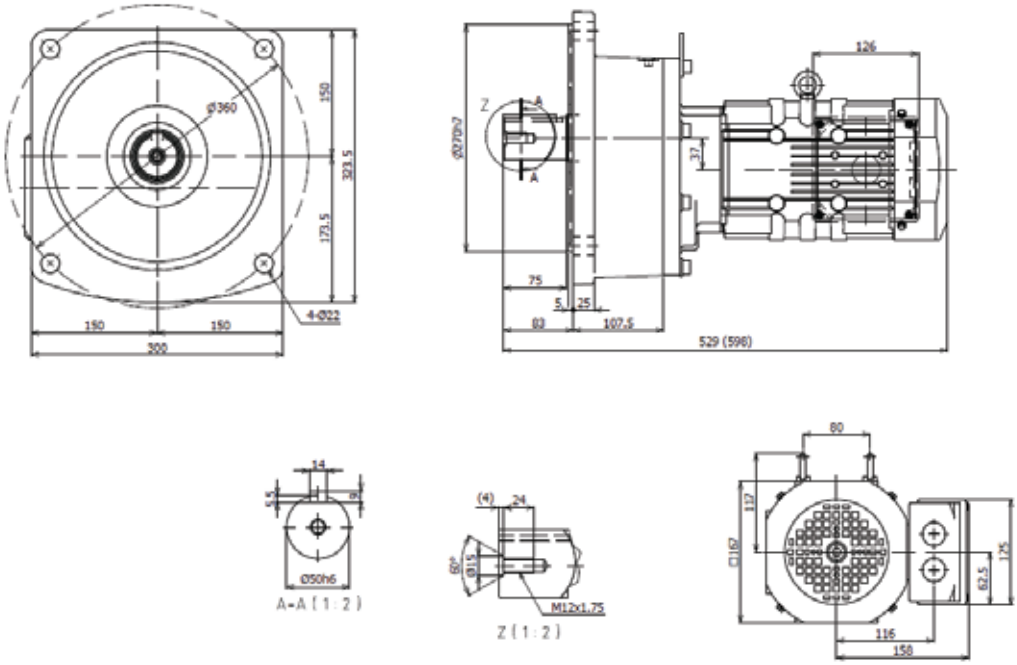

D12	ZNHM2-1500-EP-100~200 ZNHM2-1500-EP-B-100~200	Mass 59kg Mass 65kg

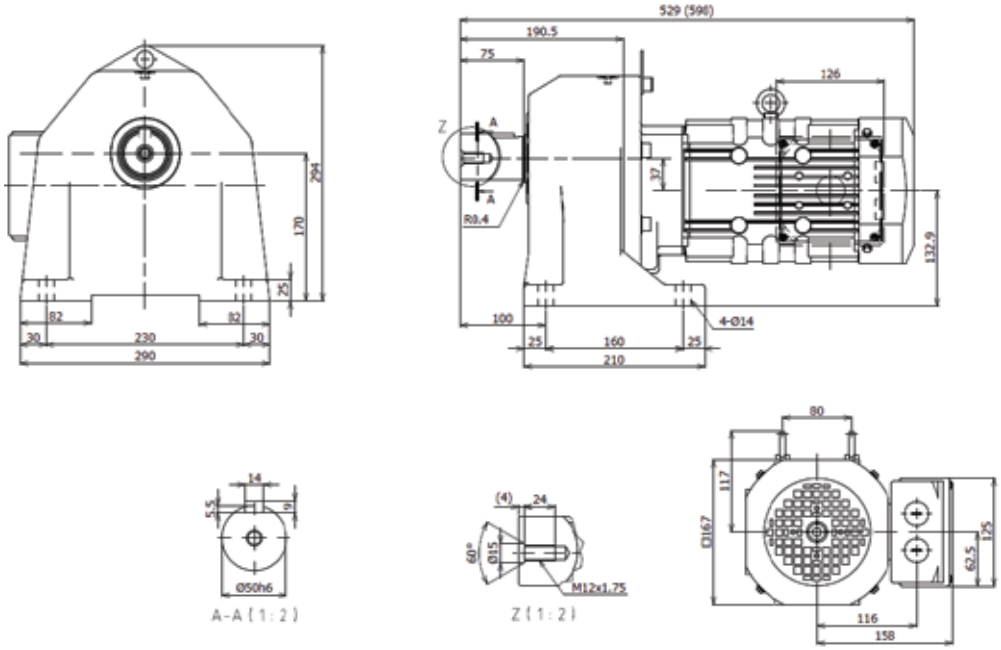

Note) 1. Output shaft diameter: Dimension tolerance compliant with the JIS B 0401-1998 "h6."
2. Shaft end key dimensions: Dimension tolerance compliant with the JIS B 1301-1996 "Parallel Keys."
3. For the detailed dimensions of the output shaft section, see Page C7.
4. The dimensions and masses in the dimensions drawings are subject to change without prior notice.
5. Values in parentheses indicate the type, dimensions and mass of the motor with brake.

Dimension Drawing

D13	ZNFM3-1400-EP-3~30 ZNFM3-1400-EP-B-3~30	Mass 47kg Mass 54kg

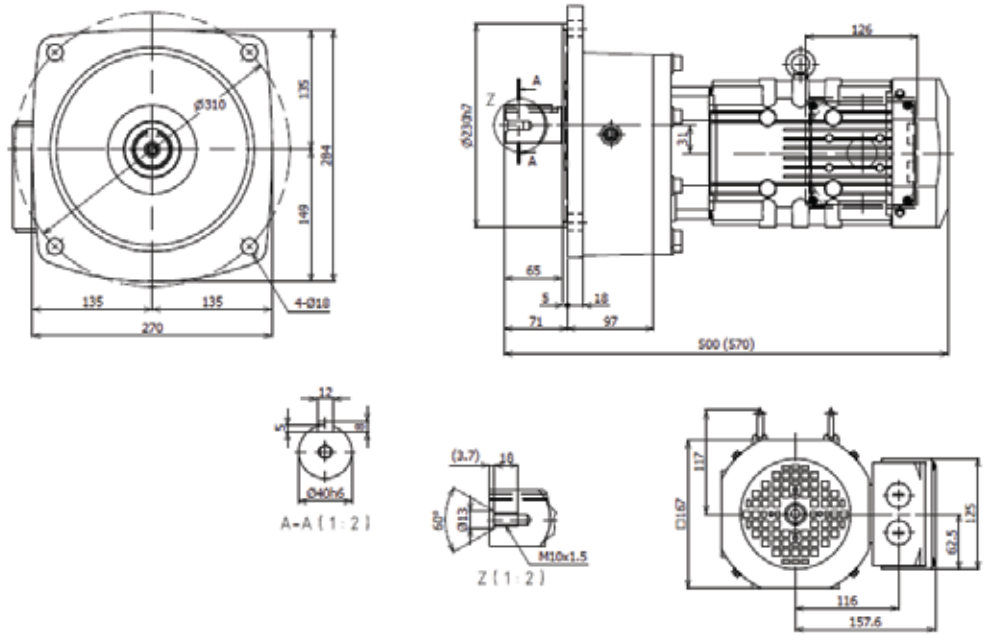

D14	ZNHM3-1400-EP-3~30 ZNHM3-1400-EP-B-3~30	Mass 47kg Mass 54kg

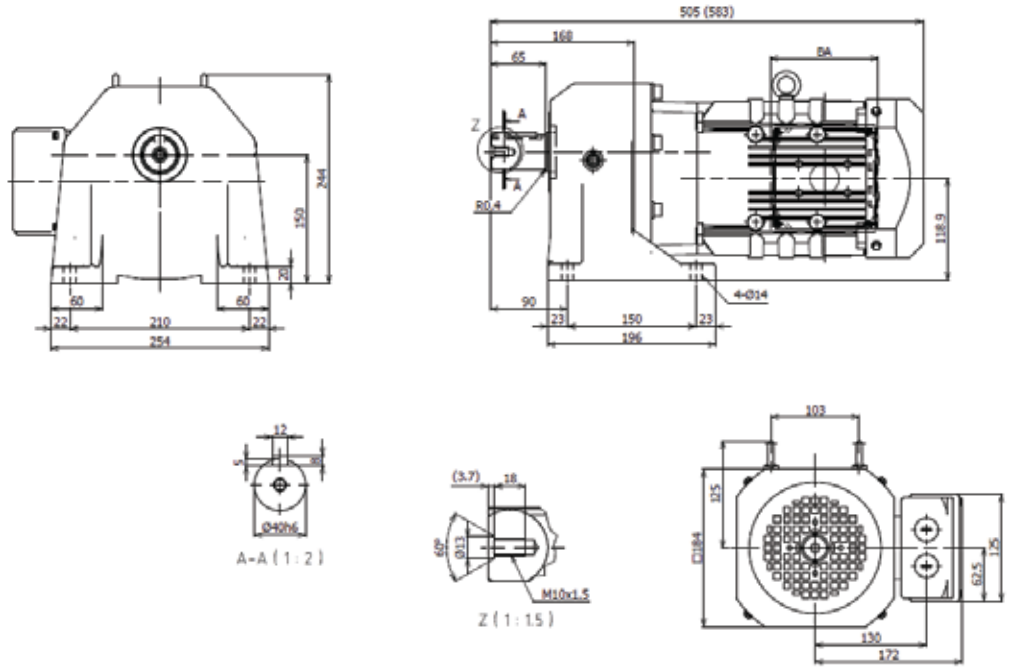

Note) 1. Output shaft diameter: Dimension tolerance compliant with the JIS B 0401-1998 "h6."
2. Shaft end key dimensions: Dimension tolerance compliant with the JIS B 1301-1996 "Parallel Keys."
3. For the detailed dimensions of the output shaft section, see Page C7.
4. The dimensions and masses in the dimensions drawings are subject to change without prior notice.
5. Values in parentheses indicate the type, dimensions and mass of the motor with brake.

Dimension Drawing

D15	ZNFM3-1501-EP-30~100 ZNFM3-1501-EP-B-30~100	Mass 70kg Mass 77kg

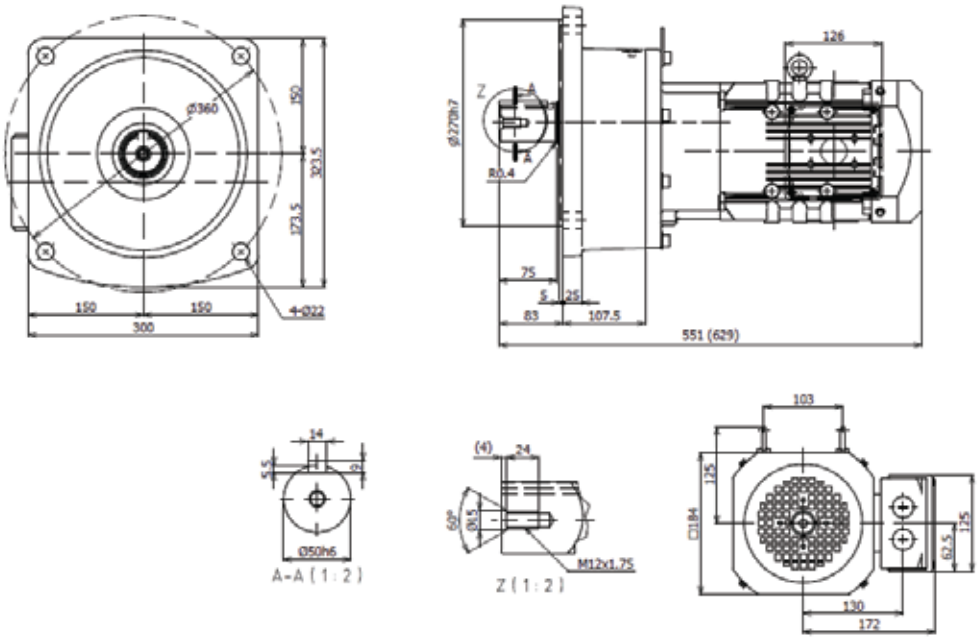

D16	ZNHM3-1501-EP-30~100 ZNHM3-1501-EP-B-30~100	Mass 68kg Mass 75kg

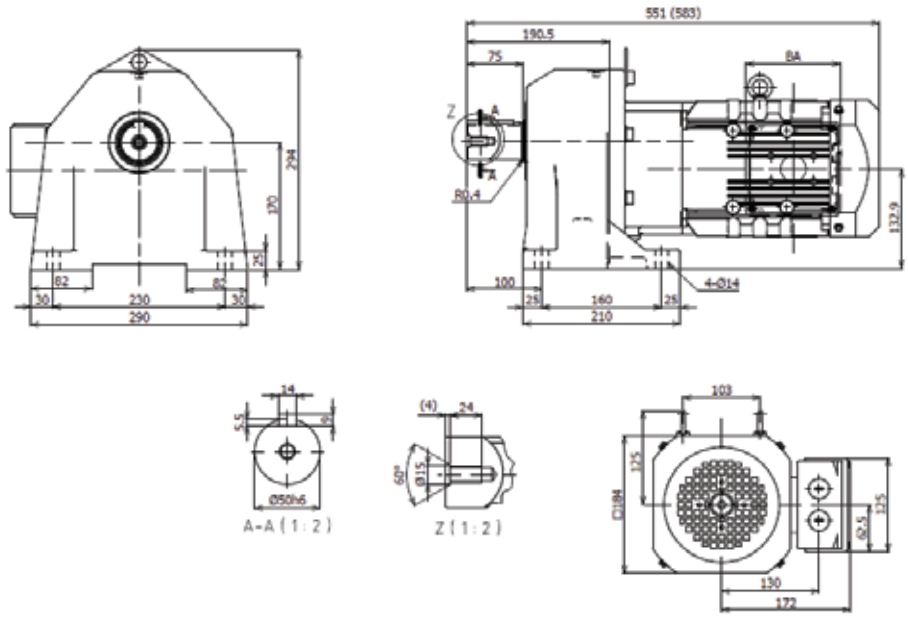

Note) 1. Output shaft diameter: Dimension tolerance compliant with the JIS B 0401-1998 "h6."
2. Shaft end key dimensions: Dimension tolerance compliant with the JIS B 1301-1996 "Parallel Keys."
3. For the detailed dimensions of the output shaft section, see Page C7.
4. The dimensions and masses in the dimensions drawings are subject to change without prior notice.
5. Values in parentheses indicate the type, dimensions and mass of the motor with brake.

Notes

G

Motor Designation / Terminal Box Dimension

PREST®NEO

Technical Data

Allowable Thrust Load / Moment of Inertia GD²

■ Output Shaft Allowable Thrust Load

$$\left(\frac{Pr \cdot Lf}{Pro} + \frac{Pa}{Pao}\right) \cdot Cf \cdot Fs \leqq 1$$

Select each value to ensure the following formula:

Pr : Actual radial load
Pro : Allowable radial load (see a selection table)
Pa : Actual thrust load
Pao : Allowable thrust load
Lf : Load location factor
Cf : Coupling factor
Fs : Shock factor

Table G1 Output Shaft Allowable Thrust Loads

Frame No.	Unit	Reduction ratio														
		3	5	10	15	20	25	30	40	50	60	80	100	120	150	200
1280	N kgf	170 17	330 34	700 71	860 87	930 95	970 99	981 100	-	-	-	-	981 100	981 100	981 100	981 100
1281	N kgf	-	-	-	-	-	-	981 100	981 100	981 100	981 100	981 100	981 100	-	-	-
1320	N kgf	280 29	580 59	970 99	1160 118	1350 138	1470 150	1470 150	-	-	-	-	1470 150	1470 150	1470 150	1470 150
1321	N kgf	-	-	-	-	-	-	1470 150	1470 150	1470 150	1470 150	1470 150	1470 150	-	-	-
1400	N kgf	300 30	600 61	1240 127	1490 151	1670 171	1860 190	2020 206	-	-	-	-	2800 285	2800 285	2800 285	2800 285
1401	N kgf	-	-	-	-	-	-	2020 206	2330 238	2420 247	2550 260	2610 266	2800 285	-	-	-
1500	N kgf	-	-	-	-	-	-	-	-	-	-	-	3890 397	3890 397	3890 397	3890 397
1501	N kgf	-	-	-	-	-	-	2760 281	3140 320	3520 359	3890 397	3890 397	3890 397	-	-	-

Notes: 1. The allowable thrust loads in the table are only applicable when a thrust load works in an output shaft drawing direction. When it works in an output shaft pushing direction, contact us on every occasion.
2. The allowable thrust loads in the table are when a radial load is not applied to the output shaft

TECHNICAL DATA

■ Moment of Inertia GD²

Table G2

Motor Type		0.75kW		1.5kW		2.2kW	
		Moment of Inertia	GD²	Moment of Inertia	GD²	Moment of Inertia	GD²
		kg•m²	kgf•m²	kg•m²	kgf•m²	kg•m²	kgf•m²
3 phase	without brake	0.00120	0.0048	0.00213	0.0085	0.00333	0.0133
	with brake	0.00130	0.0052	0.00235	0.0094	0.00373	0.0149

Notes: 1. The values in the table include the moment of inertia and GD² of the gear unit and motor unit.
2. The values in the table are suject to change without prior notice.

Output Shaft End Dimensions / Rust-Proof Specs

■ Output Shaft End Dimensions

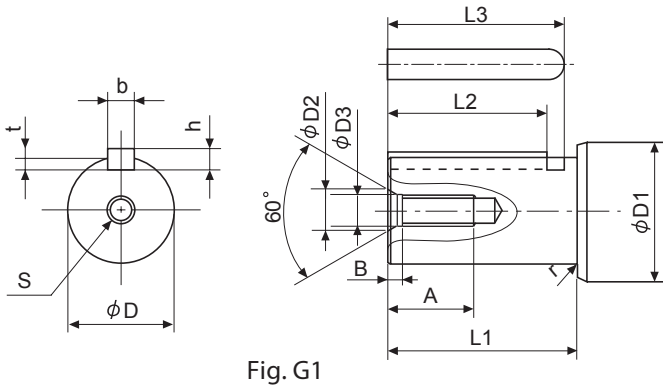

Fig. G1

Table G3

Frame No.	Tap dimension S	Tapping depth A	Center hole dimensions		
			ØD2	ØD3	B
1280 1281	M8	16	11	8.2	3.6
1320 1321	M10	18	13	-	3.7
1400 1401	M10	18	13	-	3.7
1500 1501	M12	24	15	-	4

Table G4

Frame No.	ØD	Tolerance (h6)	ØD1	L1	r	t	Tolerance	b (key)	Tolerance (h9)	h (key)	Tolerance	L2 (key)	L3
1280 1281	28	0 -0.013	30	45	0.4	4	+0.2 0	8	0 -0.036	7	0 -0.090	36	40
1320 1321	32	0 -0.016	35	55	0.4	5	+0.2 0	10	0 -0.036	8	0 -0.090	45	50
1400 1401	40	0 -0.016	45	65	0.4	5	+0.2 0	12	0 -0.043	8	0 -0.090	54	60
1500 1501	50	0 -0.016	55	75	0.4	5.5	+0.2 0	14	0 -0.043	9	0 -0.090	63	70

Notes: 1. The keyway dimensions comply with the JIS B 1301-1996 Parallel Keyways (Ordinary).
2. The information in this table is subject to change without prior notice.

■ Standard Rust-Proof Specifications

Prior to shipment, our finished products are provided with rust-proof treatment based on the following standards:

(1) External rust-proof treatment

Rust proof oil is applied prior to shipment. After shipment, check a rust-proof condition half annually and apply the oil again if necessary

(2) Internal rust-proof treatment

Rust-proof period	1 year
Storage condition	To be stored inside a general factory building or warehouse free of humidity, dust, drastic temperature change, and corrosive gases.

Notes

Bevel BUDDYBOX®
H series

H
Gearmotor
Selection Table

About the suffix and possibility to manufacture the motor

- EP : The premium-efficiency, 3-phase motor can be manufactured in combination with any frame sized of 0.75kW or higher.

Legend

- ● Can be manufactured as a standard product.
- △ Can be manufactured but the specifications have to be confirmed, so please consult us.
- □ Please consult us.
- — Cannot be manufactured.
- ◇ Suffix and Mounting Positions, please refer to Nomenclature pages A34 ~ 35

Selection Table

2.2kW

Frequency	Hz	50Hz	60Hz
Number of motor poles	P	4	
Motor speed n_1	r/min	1450	1750

50Hz						60Hz						Nomenclature								Dimension diagrams (page)
Output speed n_2	Output torque Tout		Allowable radial load Pro of the output shaft		SF	Output speed	Output torque		Allowable radial load of the output shaft		SF	Capacity symbol		Frame size		Suffix		Reduction ratio		
r/min	N·m	kgf·m	N	kgf		r/min	N·m	kgf·m	N	kgf										
287	69.6	7.11	5950	607	2.50	346	57.7	5.89	5750	587	3.00	3	-	HZ522	-	EP	-	5		I-2
207	96.4	9.84	6510	664	2.50	250	79.8	8.15	6300	643	3.00	3	-	HZ522	-	EP	-	7		
145	138	14.1	7100	724	2.50	175	114	11.6	6910	705	3.00	3	-	HZ522	-	EP	-	10		
119	168	17.2	7430	758	2.50	143	139	14.2	7250	740	3.00	3	-	HZ522	-	EP	-	12		
95.1	210	21.4	7740	790	2.50	115	174	17.8	7590	774	3.00	3	-	HZ522	-	EP	-	15		
74.8	267	27.2	7930	809	2.50	90.3	221	22.6	7840	800	3.00	3	-	HZ522	-	EP	-	20		

3.0kW

Frequency	Hz	50Hz	60Hz
Number of motor poles	P	4	
Motor speed n_1	r/min	1450	1750

50Hz						60Hz						Nomenclature								Dimension diagrams (page)
Output speed n_2	Output torque Tout		Allowable radial load Pro of the output shaft		SF	Output speed	Output torque		Allowable radial load of the output shaft		SF	Capacity symbol		Frame size		Suffix		Reduction ratio		
r/min	N·m	kgf·m	N	kgf		r/min	N·m	kgf·m	N	kgf										
287	95.0	9.69	5950	607	1.83	346	78.7	8.03	5750	587	2.20	4	-	HZ522	-	EP	-	5		I-2
207	131	13.4	6510	664	1.83	250	109	11.1	6300	643	2.20	4	-	HZ522	-	EP	-	7		
145	188	19.2	7100	724	1.83	175	156	15.9	6910	705	2.20	4	-	HZ522	-	EP	-	10		
119	229	23.4	7430	758	1.83	143	190	19.4	7250	740	2.20	4	-	HZ522	-	EP	-	12		
95.1	286	29.2	7740	790	1.83	115	237	24.2	7590	774	2.20	4	-	HZ522	-	EP	-	15		
74.8	364	37.1	7930	809	1.83	90.3	301	30.8	7840	800	2.20	4	-	HZ522	-	EP	-	20		

Actual reduction ratio

Frame size	Reduction ratio					
	5	7	10	12	15	20
HZ522	5.059	7	10	12.21	15.25	19.39

Selection Table

3.7kW

Frequency	Hz	50Hz	60Hz
Number of motor poles	P	4	
Motor speed n_1	r/min	1450	1750

50Hz						60Hz						Nomenclature								Dimension diagrams (page)
Output speed n_2	Output torque Tout		Allowable radial load Pro of the output shaft		SF	Output Speed	Output torque		Allowable radial load of the output shaft		SF	Capacity symbol		Frame size		Suffix		Reduction ratio		
r/min	N·m	kgf·m	N	kgf		r/min	N·m	kgf·m	N	kgf										
287	117	12.0	5950	607	1.49	346	97.0	9.91	5750	587	1.78	5	-	HZ522	-	EP	-	5		I-2
207	162	16.5	6510	664	1.49	250	134	13.7	6300	643	1.78	5	-	HZ522	-	EP	-	7		
145	232	23.6	7100	724	1.49	175	192	19.6	6910	705	1.78	5	-	HZ522	-	EP	-	10		
119	283	28.9	7430	758	1.49	143	234	23.9	7250	740	1.78	5	-	HZ522	-	EP	-	12		
95.1	353	36.0	7740	790	1.49	115	293	29.9	7590	774	1.78	5	-	HZ522	-	EP	-	15		
74.8	449	45.8	7930	809	1.49	90.3	372	38.0	7840	800	1.78	5	-	HZ522	-	EP	-	20		

5.5kW

Frequency	Hz	50Hz	60Hz
Number of motor poles	P	4	
Motor speed n_1	r/min	1450	1750

50Hz						60Hz						Nomenclature								Dimension diagrams (page)
Output speed n_2	Output torque Tout		Allowable radial load Pro of the output shaft		SF	Output speed	Output torque		Allowable radial load of the output shaft		SF	Capacity symbol		Frame size		Suffix		Reduction ratio		
r/min	N·m	kgf·m	N	kgf		r/min	N·m	kgf·m	N	kgf										
282	177	18.1	5580	569	1.36	340	147	15.0	5440	555	1.64	8	-	HZ523	-	EP	-	5		I-2
206	242	24.7	5980	610	1.36	248	201	20.5	5870	599	1.64	8	-	HZ523	-	EP	-	7		
147	338	34.5	6320	645	1.36	178	280	28.6	6250	638	1.64	8	-	HZ523	-	EP	-	10		
119	420	42.9	6420	655	1.36	143	348	35.5	6410	654	1.64	8	-	HZ523	-	EP	-	12		
99.7	500	51.1	6480	661	1.36	120	415	42.3	6520	665	1.64	8	-	HZ523	-	EP	-	15		
71.1	701	71.6	12200	1240	2.00	85.9	581	59.3	12000	1220	2.40	8	-	HA635	-	EP	-	20		I-4

Actual reduction ratio

Frame size	Reduction ratio					
	5	7	10	12	15	20
HZ522	5.059	7	10	12.21	15.25	19.39
HZ523	5.143	7.043	9.833	12.20	14.54	
HA635						20.38

Selection Table

7.5kW

Frequency Hz	50Hz	60Hz
Number of motor poles P	4	
Motor speed n_1 r/min	1450	1750

50Hz						60Hz						Nomenclature								Dimension diagrams (page)
Output speed n_2	Output torque Tout		Allowable radial load Pro of the output shaft		SF	Output Speed	Output torque		Allowable radial load of the output shaft		SF	Capacity symbol		Frame size		Suffix		Reduction ratio		
r/min	N·m	kgf·m	N	kgf		r/min	N·m	kgf·m	N	kgf										
292	233	23.8	5130	523	1.47	352	193	19.7	5060	516	1.76	10	-	HZ524	-	EP	-	5		I-3
211	322	32.9	5380	549	1.47	255	267	27.3	5350	546	1.76	10	-	HZ524	-	EP	-	7		
146	468	47.7	5450	556	1.47	176	387	39.6	5530	564	1.76	10	-	HZ524	-	EP	-	10		
117	580	59.2	12000	1220	2.00	142	480	49.0	11700	1190	2.40	10	-	HA635	-	EP	-	12		I-5
97.6	698	71.2	12500	1270	2.00	118	578	59.0	12200	1240	2.40	10	-	HA635	-	EP	-	15		
71.1	956	97.6	12200	1240	1.47	85.9	792	80.9	12000	1220	1.76	10	-	HA635	-	EP	-	20		

11kW

Frequency Hz	50Hz	60Hz
Number of motor poles P	4	
Motor speed n_1 r/min	1450	1750

50Hz						60Hz						Nomenclature								Dimension diagrams (page)
Output speed n_2	Output torque Tout		Allowable radial load Pro of the output shaft		SF	Output speed	Output torque		Allowable radial load of the output shaft		SF	Capacity symbol		Frame size		Suffix		Reduction ratio		
r/min	N·m	kgf·m	N	kgf		r/min	N·m	kgf·m	N	kgf										
289	346	35.3	8740	892	1.68	349	286	29.2	8540	871	2.02	15	-	HA635	-	EP	-	5		I-5
209	478	48.8	9690	989	1.68	252	396	40.5	9470	966	2.02	15	-	HA635	-	EP	-	7		
145	688	70.3	10200	1040	1.68	175	570	58.2	10100	1030	2.02	15	-	HA635	-	EP	-	10		
117	850	86.8	10300	1050	1.47	142	704	71.9	10300	1050	1.64	15	-	HA635	-	EP	-	12		
97.6	1020	104	10500	1070	1.47	118	848	86.5	10500	1070	1.64	15	-	HA635	-	EP	-	15		

Actual reduction ratio

Frame size	Reduction ratio					
	5	7	10	12	15	20
HZ524	4.969	6.868	9.964			
HA635	5.020	6.949	10	12.35	14.86	20.38

Bevel BUDDYBOX®
H series

I
Gearmotor
Dimension Drawing

Precautions

1. The dimension values described in this catalog dimension drawing are the maximum dimensions considering the asperities of each part excluding the shaft diameter and major installation parts. Therefore, they may be a little different from the actual product dimensions.
2. For the dimensions of the parts not described in the dimension drawing, please consult us.
3. This catalog dimension drawing may be changed without notice to customers.
4. For the dimensions of your product, please confirm the manufacturing specification which we will provide.

Dimension Drawing

Premium-efficiency, 3-phase motor	LNYMΔ - HZ522 to HZ523 - EP(-B) - reduction ratio
Premium-efficiency, 3-phase motor for inverter	LNYMΔ - HZ522 to HZ523 - AP(-B) - reduction ratio

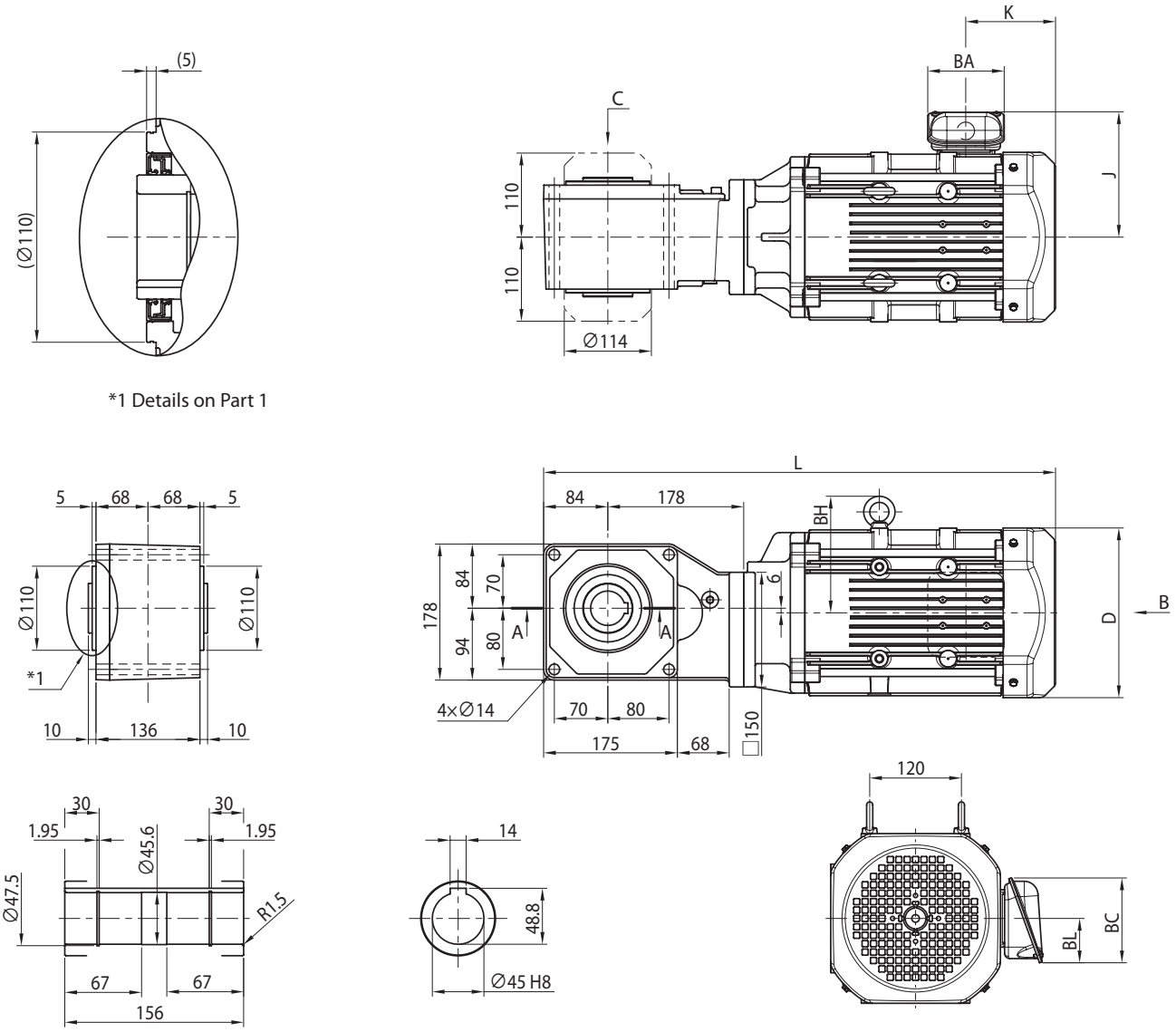

DIMENSION DRAWING

Frame size	Capacity kW x4P	Capacity symbol	BH	Indoor									Outdoor									Terminal box dimension
				J	Without brake				With brake (B)				J	Without brake				With brake (B)				
					K	D	L	Mass (kg)	K	D	L	Mass (kg)		K	D	L	Mass (kg)	K	D	L	Mass (kg)	
HZ522	2.2	3	125	150	115	□184	592	49	193	□184	670	56	183	115	□184	592	50	193	□184	670	57	a
	3.0	4	125	150	115	□184	606	51	193	□184	684	58	183	115	□184	606	52	193	□184	684	59	
	3.7	5	153	166	118	□222	627	60	208	□222	717	71	199	118	□222	627	61	208	□222	717	72	
HZ523	5.5	8	153	166	118	□222	670	72	208	□222	760	83	199	118	□222	670	73	208	□222	760	84	

Terminal box dimension	Indoor			Outdoor		
	BA	BC	BL	BA	BC	BL
a	100	111	58	123	151	87

Note) 1 A capacity symbol for the motor is entered in nomenclature Δ.
2 Output shaft bore diameter dimension: Dimension tolerance is JIS B 0401-1998 "H8."
3 Output shaft keyway dimension: Conforms to JIS B 1301-1996 (ISO) "Keys and their corresponding keyways (normal form)."
4 The dimensions and mass depicted in this dimension diagram may be changed without notice.

Dimension Drawing

Premium-efficiency, 3-phase motor	LNYM10 - HZ524 - EP(-B) - reduction ratio
Premium-efficiency, 3-phase motor for inverter	LNYM10 - HZ524 - AP(-B) - reduction ratio

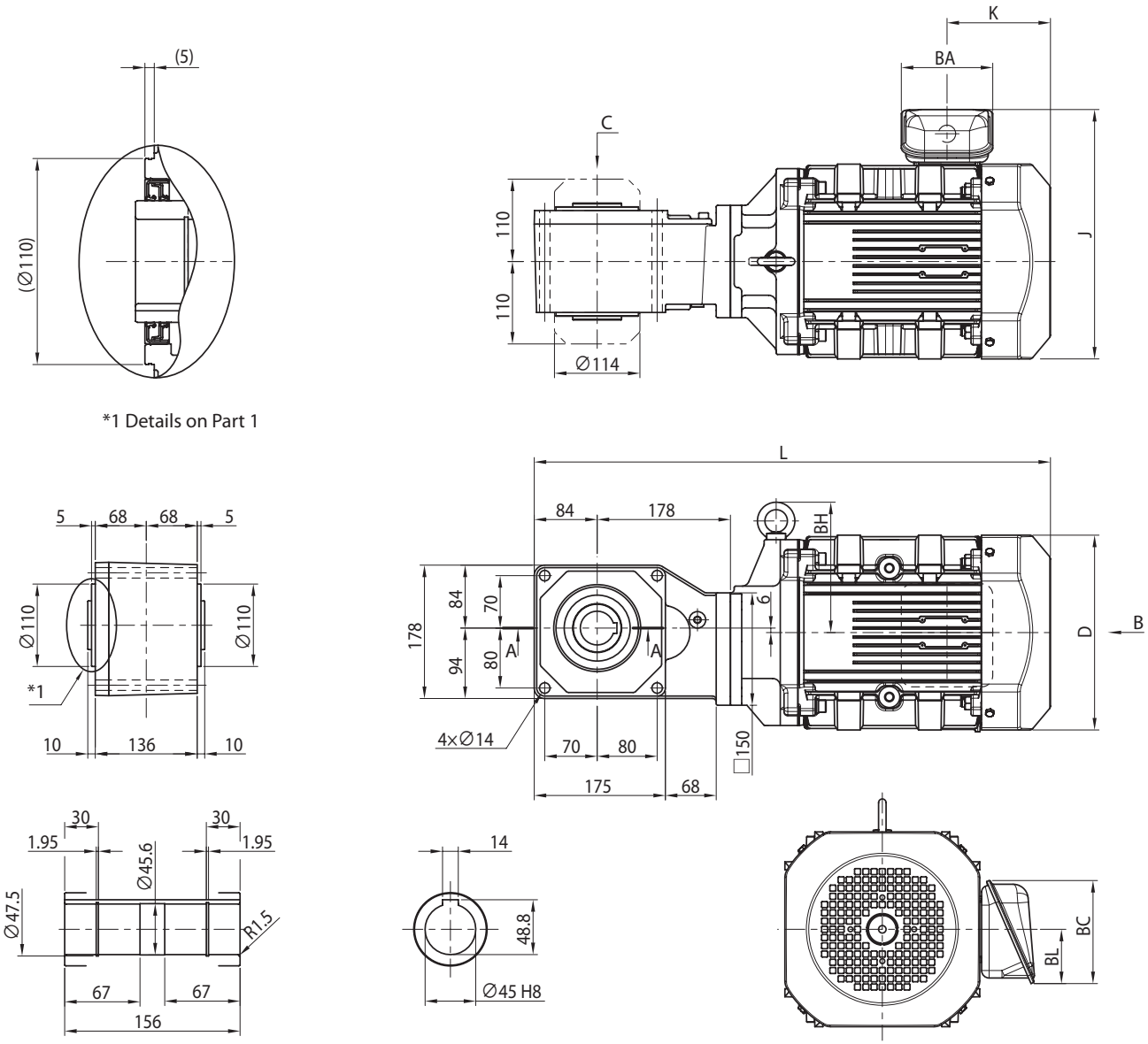

Frame size	Capacity kW x4P	Capacity symbol	BH	Indoor									Outdoor									Terminal box dimension
				J	Without brake				With brake (B)				J	Without brake				With brake (B)				
					K	D	L	Mass (kg)	K	D	L	Mass (kg)		K	D	L	Mass (kg)	K	D	L	Mass (kg)	
HZ524	7.5	10	174	203	138	□260	689	88	243	□260	794	108	235	138	□260	689	89	243	□260	794	109	b

Terminal box dimension	Indoor			Outdoor		
	BA	BC	BL	BA	BC	BL
b	122	138	72	154	184	105

Note) 1 Output shaft bore diameter dimension: Dimension tolerance is JIS B 0401-1998 "H8."
2 Output shaft keyway dimension: Conforms to JIS B 1301-1996 (ISO) "Keys and their corresponding keyways (normal form)."
3 The dimensions and mass depicted in this dimension diagram may be changed without notice.

Dimension Drawing

Premium-efficiency, 3-phase motor	LNYM8 - HA635 - EP(-B) - reduction ratio
Premium-efficiency, 3-phase motor for inverter	LNYM8 - HA635 - AP(-B) - reduction ratio

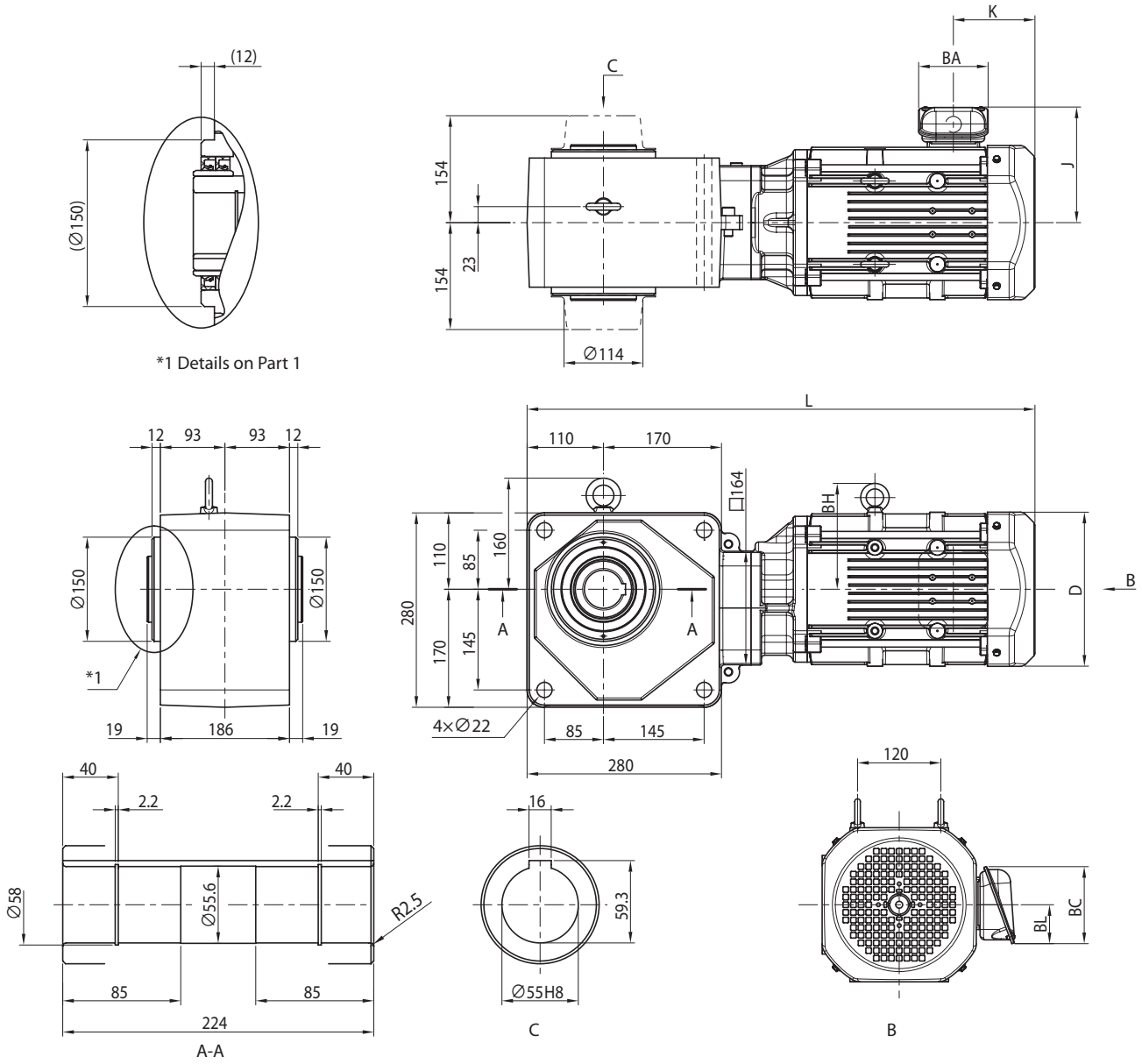

Frame size	Capacity kW x4P	Capacity symbol	BH	Indoor									Outdoor								Terminal box dimension
				J	Without brake				With brake (B)				J	Without brake				With brake (B)			
					K	D	L	Mass (kg)	K	D	L	Mass (kg)		K	D	L	Mass (kg)	K	D	L	Mass (kg)	
HA635	5.5	8	153	166	118	□222	732	95	208	□222	822	106	199	118	□222	732	96	208	□222	822	107	a

Terminal box dimension	Indoor			Outdoor		
	BA	BC	BL	BA	BC	BL
a	100	111	58	123	151	87

Note) 1 Output shaft bore diameter dimension: Dimension tolerance is JIS B 0401-1998 "H8."
2 Output shaft keyway dimension: Conforms to JIS B 1301-1996 (ISO) "Keys and their corresponding keyways (normal form)."
3 The dimensions and mass depicted in this dimension diagram may be changed without notice.

Dimension Drawing

Premium-efficiency, 3-phase motor	LNYMΔ - HA635 - EP(-B) - reduction ratio
Premium-efficiency, 3-phase motor for inverter	LNYMΔ - HA635 - AP(-B) - reduction ratio

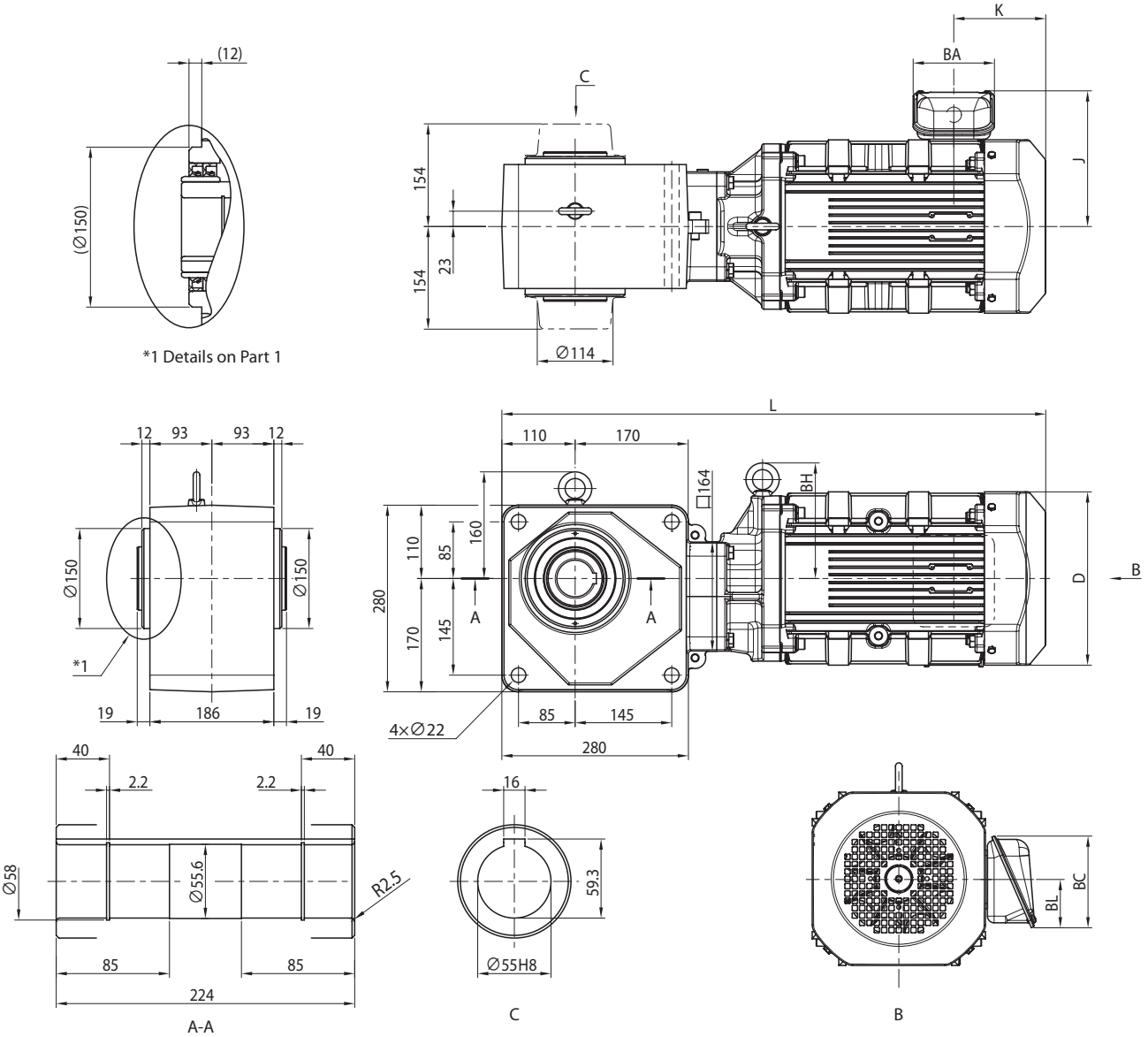

Frame size	Capacity kW x4P	Capacity symbol	BH	Indoor									Outdoor									Terminal box dimension
				J	Without brake				With brake (B)				J	Without brake				With brake (B)				
					K	D	L	Mass (kg)	K	D	L	Mass (kg)		K	D	L	Mass (kg)	K	D	L	Mass (kg)	
HA635	7.5	10	174	203	138	□260	755	111	243	□260	860	131	235	138	□260	755	112	243	□260	860	132	b
	11	15	174	203	138	□260	816	129	243	□260	921	149	235	138	□260	816	130	243	□260	921	150	

Terminal box dimension	Indoor			Outdoor		
	BA	BC	BL	BA	BC	BL
b	122	138	72	154	184	105

Note) 1 A capacity symbol for the motor is entered in nomenclature Δ.
2 Output shaft bore diameter dimension: Dimension tolerance is JIS B 0401-1998 "H8."
3 Output shaft keyway dimension: Conforms to JIS B 1301-1996 (ISO) "Keys and their corresponding keyways (normal form)."
4 The dimensions and mass depicted in this dimension diagram may be changed without notice.

Notes

Bevel BUDDYBOX®
H series

J
Technical Data

Construction Drawing

■ Construction Drawing

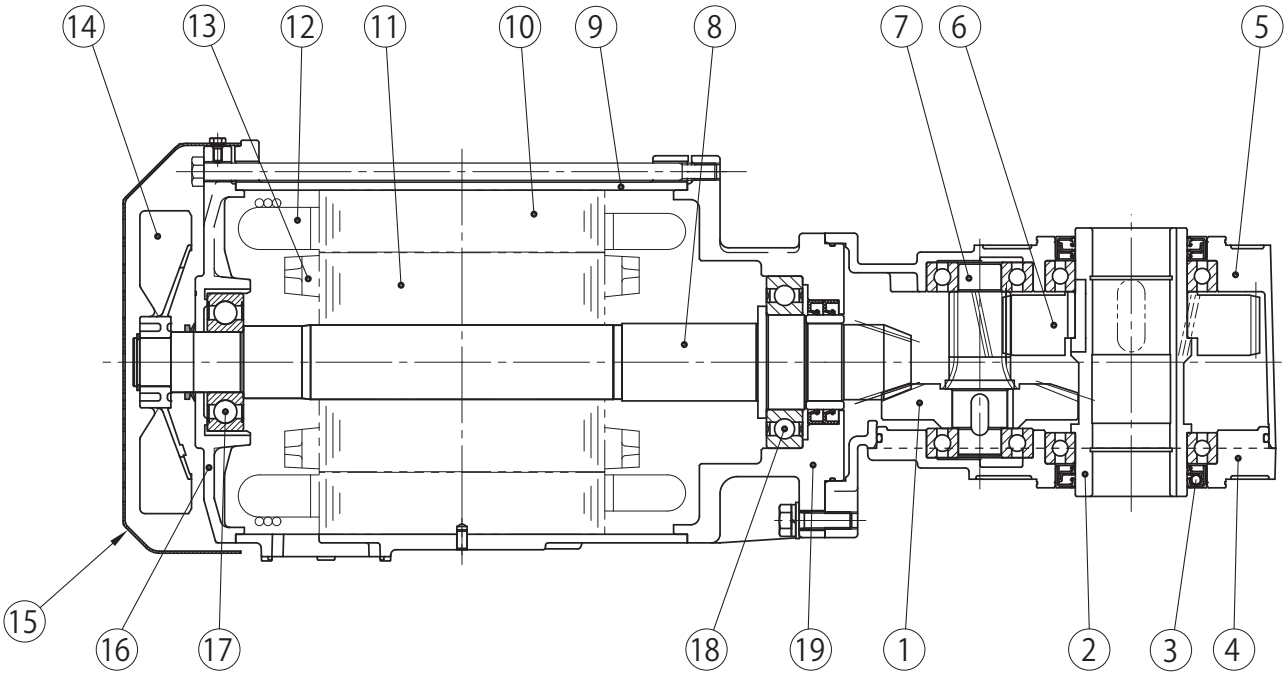

Figure J1 LNYM8-HZ523-EP

Table J1 Gearmotor main parts

Part number (PN)	Part Name	Part number (PN)	Part Name	Part number (PN)	Part Name
1	Bevel gear	8	Bevel pinion shaft	15	Fan cover
2	Output Shaft	9	Motor frame	16	Anti-load side cover
3	Oil seal	10	Stationary core	17	Bearing
4	Case (1)	11	Rotor core	18	Bearing
5	Case (2)	12	Stationary coil	19	Motor flange bracket
6	Gear	13	Rotor conductor		
7	Pinion shaft	14	Fan		

How to Read Nameplates

Gearmotor (Motor directly connected)

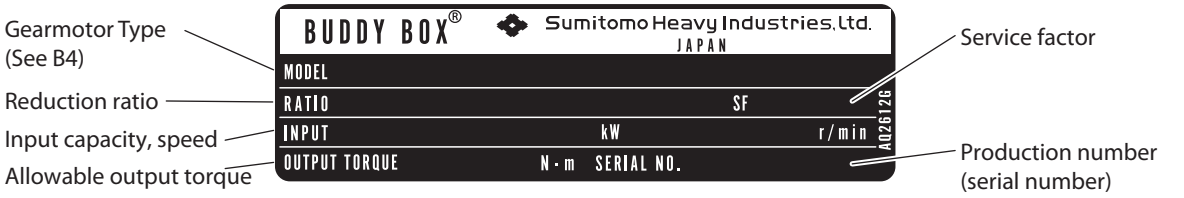

(Gear unit nameplate)

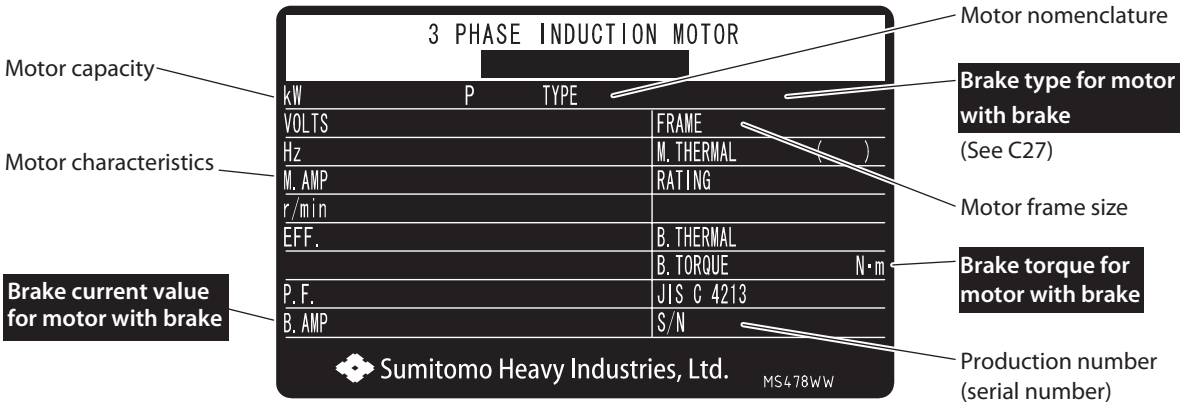

(Motor unit nameplate)

Figure C2 Gear unit nameplate

TECHNICAL DATA

Lubrication

Standard Lubrication

- The gear part is filled with long-life grease, so long-term use is possible without replenishment. However, an even longer product life can be achieved by carrying out an overhaul at roughly 20,000 hours or 3 to 5 years.
- Overhauling of the gearmotor requires skill, so always carry it out at one of our authorized service stations.

Precautions for Oil Seal

- Oil seals have a service life, so the sealing effect may decrease over time due to natural deterioration and wear. The service life length will vary widely depending on the drive operating conditions and the surrounding environment. Given normal operation, (uniform load, running 10 hours per day, normal temperature) as a guideline it is recommended to change them every 1 to 3 years. Meanwhile, if rust is developing on the shaft (or collar) at that time, please have it replaced at the same time.
- Lubricating grease is applied to the oil seal. Oil from the grease described above may seep out during the early stages of operation. If oil seeps out, please wipe it off. If oil continues to seep out, replacement of the oil seal is recommended.

Output Shaft Rotational Direction and Bore Diameter

Output Shaft Rotational Direction

The motor shaft rotates to the right when viewed seen from the fan cover side, if connections are carried out according to the connection diagrams (during forward running) on pages C34 to C41.
The output shaft rotational direction at this time will be as follows.

Table J2 Output shaft rotational direction

Frame size	Reduction ratio	
HZ522	5, 7, 10, 12, 15, 20	-
HZ523	5, 7, 10, 12, 15	-
HZ524	5, 7, 10	-
HA635	5, 7, 10, 12, 15	20
Rotation direction	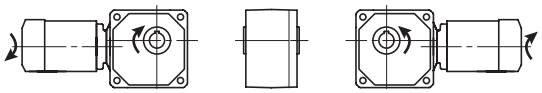	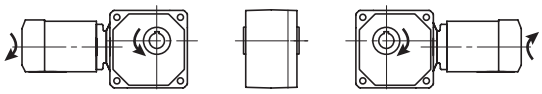

Note) For reverse rotation, swap the Rs and Ts on pages C34 and C36-C39.

Output Shaft Bore Diameter

The output shaft bore diameter can be made to an optional dimension, other than the standard dimension.

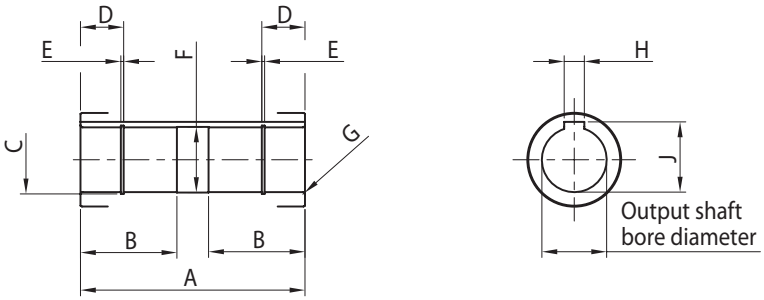

Figure J4 Output shaft bore diameter

Table J3 Output shaft bore diameter

Frame size	Output shaft bore diameter	A	B	C	D	E	F	G	H	J
HZ522, HZ523, HZ524	∅ 40 (Optional)	156	60	∅ 42.5	30	1.95	∅ 40.6	R1.5	12	43.3
	∅ 45 (Standard)		67	∅ 47.5			∅ 45.6		14	48.8
HA635	∅ 50 (Optional)	224	76	∅ 53	30	2.2	∅ 50.6	R1.5	14	53.8
	∅ 55 (Standard)		85	∅ 58	40		∅ 55.6	R2.5	16	59.3

Notes: 1. Output shaft bore diameter dimension: Dimension tolerance is JIS B 0401-1998 "H8."
2. Output shaft keyway dimension: Conforms to JIS B 1301-1996 (ISO) "Keys and their corresponding keyways (normal form)."

Output Shaft (Hollow Shaft) Handling Document

■ Attaching the Output Shaft (Hollow Shaft)

1. Attachment to the driven shaft

- Apply molybdenum disulfide grease to the surface of the driven shaft and the inner diameter of the output shaft (hollow shaft), and insert the drive into the driven shaft.
- If the fitting is tight, insert by lightly hitting the end face of the output shaft (hollow shaft) with a wooden hammer. Never hit the casing at this time. Additionally, as seen in the diagram, insertion can be done more smoothly by making and using jigs [a] to [e].
- The output shaft (hollow shaft) is made according to the JIS H8 tolerance. The recommended dimension tolerance of the driven shaft is as follows.
  When the load is uniform and a shock does not occur: JIS h6 or js6
  When there is an impact load or when the radial load is large: JIS js6 or k6
- The size of the snap ring is in accordance with the JIS B2804, C-type retaining ring.
- When making the driven shaft stepped, please check the shaft stress.

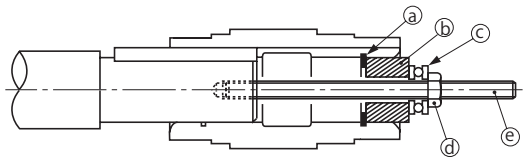

[a] Snap ring [b] Spacer [c] Thrust bearing
[d] Nut [e] Screw bolt

2. Removal from the driven shaft

Be careful not to apply excess force between the casing and the output shaft (hollow shaft).
Removal can be done more smoothly by using the jigs [f] to [i], as shown in the diagram.

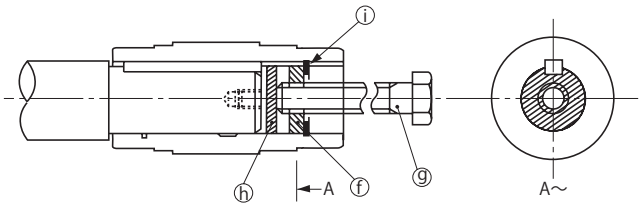

[f]Spacer [g]Finished bolt [h]Discoid [i]Snap ring

3. The length of the driven shaft

The length L, for which the driven shaft is inserted, must be equal to or longer than the recommended length of the driven shaft.

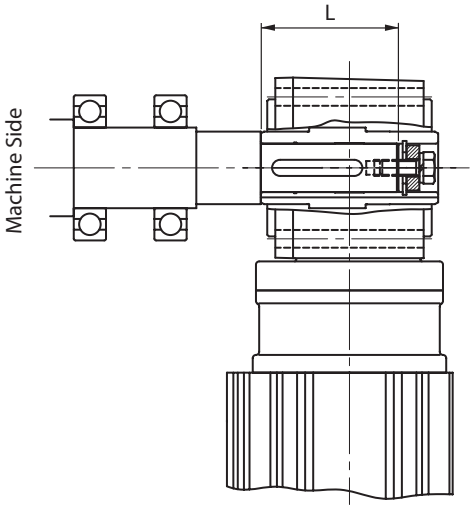

Figure J5 Driven shaft length

Table J4 Recommended length of driven shaft

Frame size	Output shaft bore diameter	Recommended length of driven shaft	Effective length of driven shaft key
HZ522, HZ523, HZ524	∅ 40	108	85
	∅ 45	104	70
HA635	∅ 50	169	110
	∅ 55	159	90

Output Shaft (Hollow Shaft) Handling Document

4. Fixing to the driven shaft

When locking with a torque arm, always fix the drive to the driven shaft.

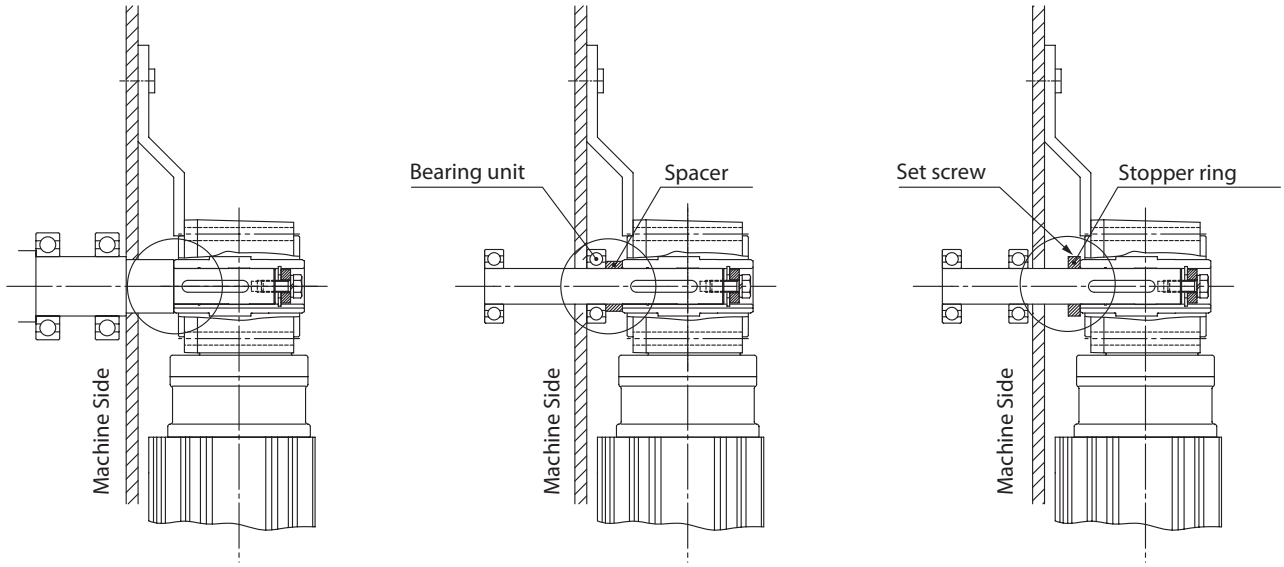

Fixing with a stepped shaft

Fixing with a spacer (driven shaft not stepped)

Fixing with a set screw and a stopper ring (driven shaft not stepped)

Figure J6 Fixing methods in which the present product does not move to the machine side.

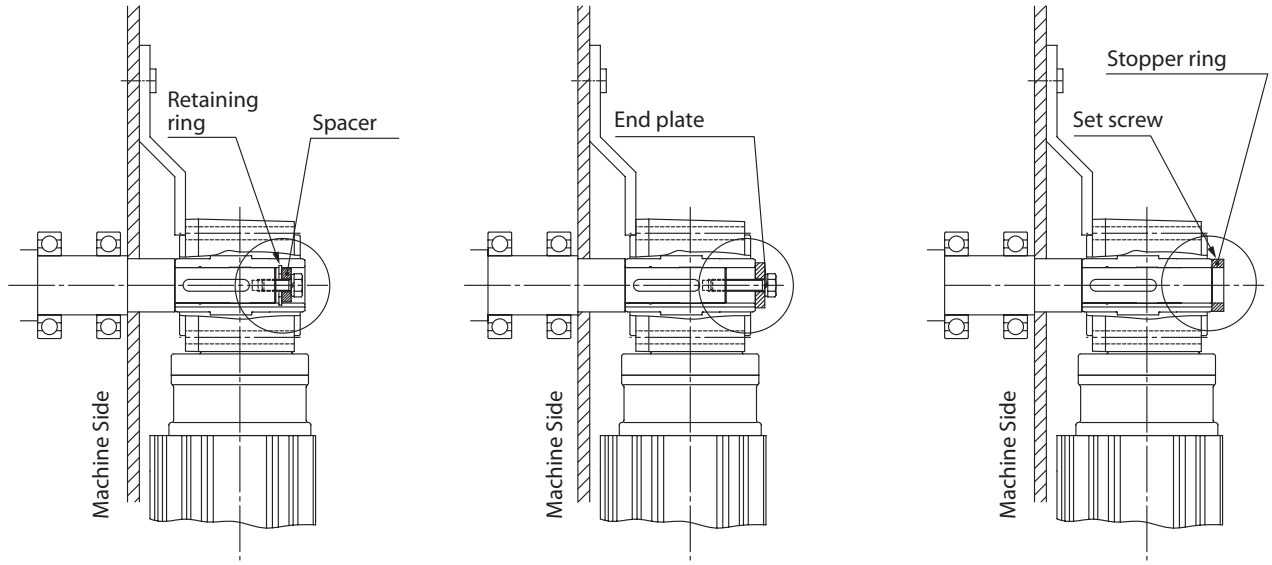

Fixing with a spacer and a snap ring

Fixing with an end plate

Fixing with a set screw and a stopper ring

Figure J7 Fixing methods in which the present product does not move to the opposite of the machine.

Output Shaft (Hollow Shaft) Handling Document

5. Locking the torque arm

[1] Attach the torque arm to the driven machine side of the case. Use a hexagon socket head bolt to mount on the case. (See Table C6 for size)

[2] Allow a degree of freedom to the locking part of the torque arm so that excess force is not applied between the product and the driven shaft. Never fix the torque arm using a retainer bolt.

[3] If starting and stopping frequency is high, and when repeating forward and reverse operations, etc., the impact can be mitigated by installing rubber bushing between the torque arm and the mounting bolt (or spacer).

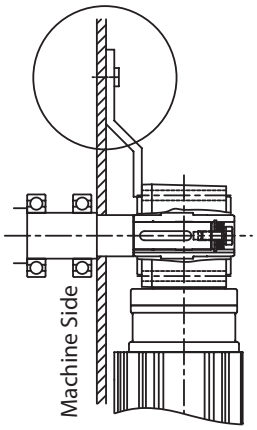

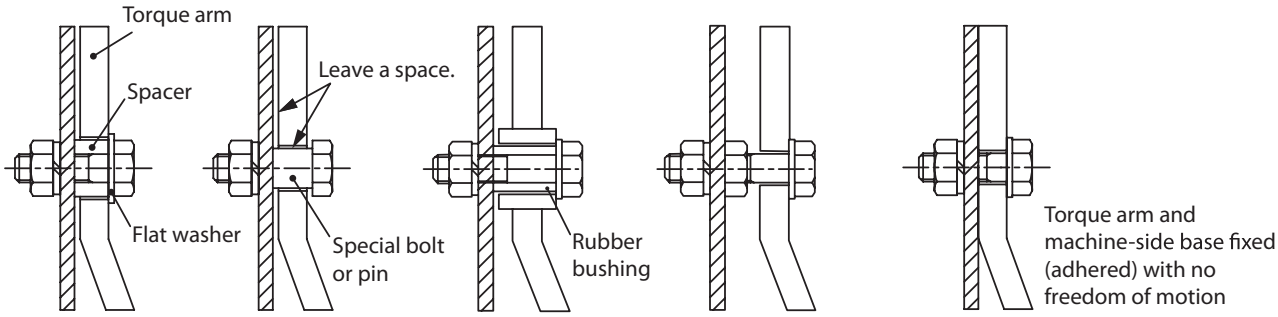

Adjust the amount of the space to a size that does not result in excessive force or contact in accordance with the movement of the machine.

Good example

The retainer bolt, machine or the product may be damaged due to excessive force.

Bad example

Figure J8 Locking part installation example

Table J5 Hexagon socket head bolt size

Frame Size	Bolt size
HZ522, HZ523, HZ524	M12
HA635	M20

Output Shaft (Hollow Shaft) Handling Document

Design example of the Torque Arm

The torque arm is prepared by the customer. The designing procedure of the torque arm is shown below. Meanwhile, for applications in which continuous operation and starting/stopping are infrequent, there is an optional torque arm.
See page J14 for details.

1. Calculation method of the strength check of the torque arm

Please refer to the following figures and formulas, and check the strength of the torque arm and driven shaft, and the service life of the bearing.

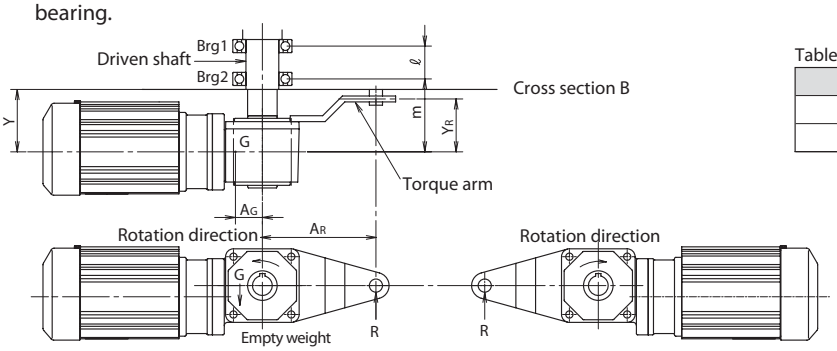

Figure J9: Example design

Table J6 (m)

Frame Size	A_G
HZ522, HZ523, HZ524	0.25
HA635	0.30

(Approximate values)

1. Torque arm load : $R = \frac{T+A_G \cdot G}{A_R}$
2. Brg. 1 load : $B1 = \frac{m(R-G)-Y_R \cdot R}{\ell}$
3. Brg. 2 load : $B2 = \frac{(\ell+m)(R-G)-Y_R \cdot R}{\ell}$
4. Bending moment for cross section B of the driven shaft
   : $M = Y_R \cdot R - Y(R-G)$ but $0 < Y \leqq m$

T : Output torque (N·m)
G : Empty weight of drive (N)
R : Torque arm load (N)
A_G : Distance from drive shaft center to gravitational center of drive (m)
A_R : Distance from drive shaft center to torque arm retainer (m)
Y_R : Distance from drive center to torque arm retainer (m)
m : Distance from drive center to Brg. 2 (m)
ℓ : Distance from Brg. 1 to Brg. 2 (m)
Y : Distance from drive center to cross section B (m)

Note: Change + to - if the rotation direction of the output torque is opposite from that shown above.

2. Recommended dimensions of the torque arm

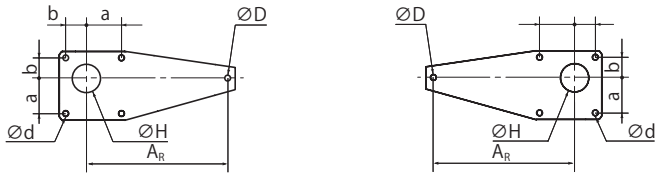

Figure J10 Recommended dimensions

Table J7 Recommended dimensions

Frame size	Torque arm length	Torque arm bore diameter	Bore diameter of the torque arm locking part.	Torque arm mounting pitch			Torque arm mounting bore diameter	Torque arm plate thickness
	A_R	Ø H	Ø D	a	b	c	Ø d	
HZ522 HZ523 HZ524	150	112	22	80	70	–	14	9
HA635	280	152	22	145	85	–	22	12

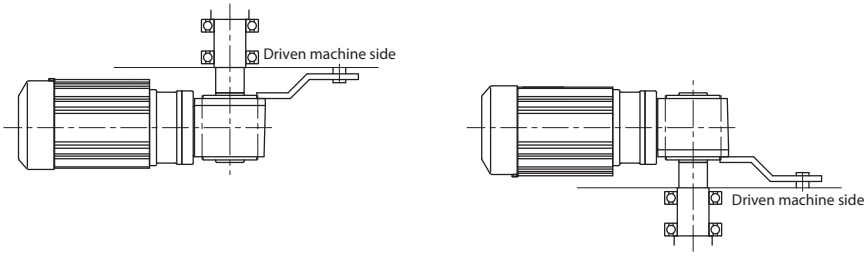

Figure J11 Installation method

Notes: 1. Attach the torque arm to the driven machine side.
2. The torque arm is mountable on either the left or right side of the case flange surface.
3. When mounting on the motor side, beware of interference with the motor.

Output Shaft (Hollow Shaft) Handling Document

■Torque Arm Option

- There is an optional torque arm. This can be used if continuous operation, and starting and stopping are infrequent.
- It cannot be mounted on the motor side from the output shaft (hollow shaft).
- When preparing the torque arm on your own, if starting and stopping is frequent, or if mounting the torque arm on the motor side, please refer to page J13 while carrying out the design.

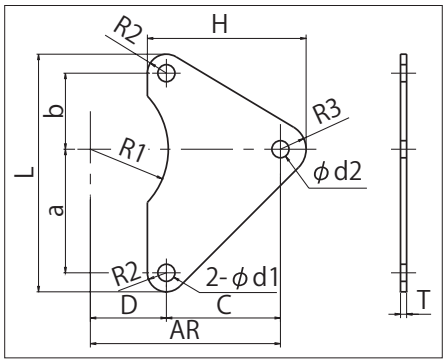

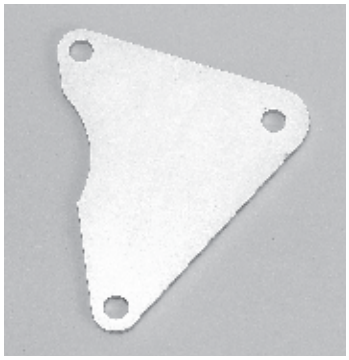

Figure J12 Torque arm

Table J8 Dimension table

Frame size	a	b	C	D	H	L	d1	d2	R1	R2	R3	T
HZ522 HZ523 HZ524	80	70	80	–	127	178	∅ 14	∅ 22	–	14	33	9
HA635	145	85	195	85	250	274	∅ 22	∅ 22	80	22	33	12

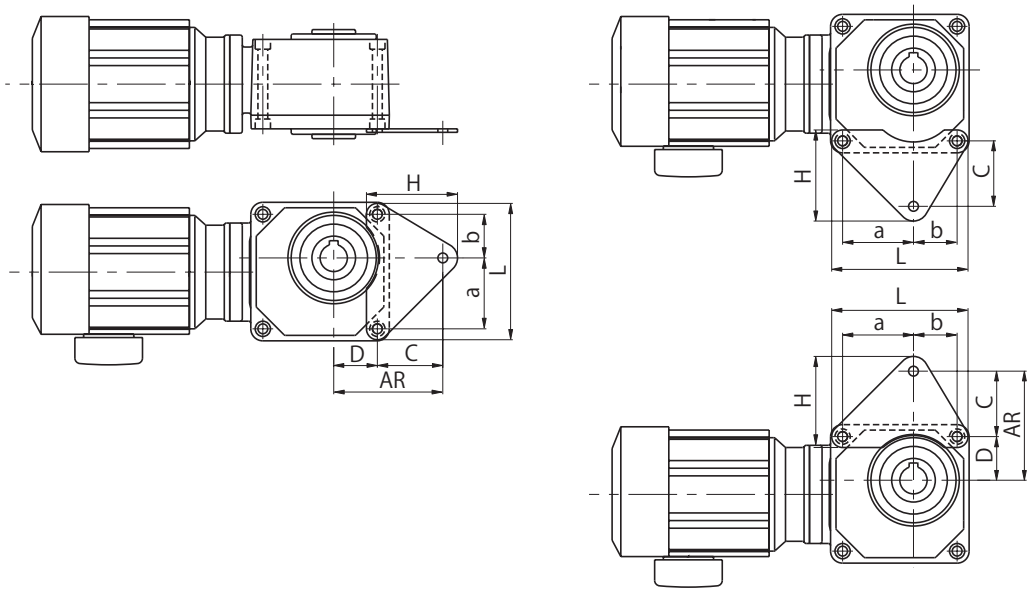

Figure J13 Installation example

Notes: 1. Please use the torque arm only for the locking function.
2. Please use the driven shaft to affix the drive in the axial direction.

Output Shaft (Hollow Shaft) Handling Document

Safety Cover of the Output Shaft

One safety cover made of resin is attached.
Mounting on either the left or right side is possible.

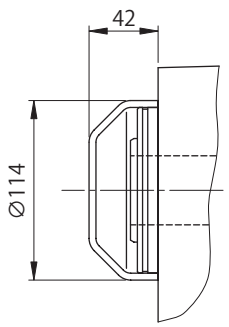

Figure J14 Safety cover (for HZ522, HZ523 and HZ524)

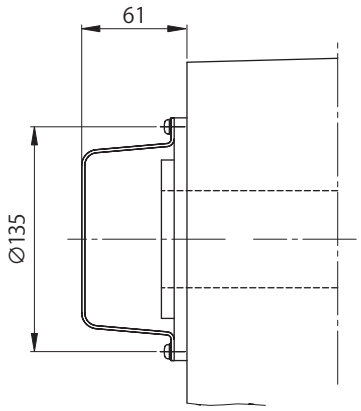

Figure J15 Safety cover (for HA635)

Output Shaft (Hollow Shaft) Handling Document

■ Shrink Disk (Optional)

Design recommendation example

1. Designing the driven shaft

- When ordering the product, the mounting direction of the shrink disk must always be specified. (See Table J11)
  The mounting direction of the shrink disk cannot be changed after delivery.
- Please design the driven shaft with reference to Dimension Table J9.

2. Installation of the shrink disk

- Since the shrink disk is attached to the drive main unit, in a state in which grease is applied to the surface that tightens the boss when shipped, assembly can be carried out as is.
  Inserts that are stuffed between the two plates in transit can be removed by loosening all bolts.
  When removing the shrink disk that has been used so far and reusing it, first disassemble and wash it. Then, apply molybdenum disulfide grease to the surface that will come into contact with the sliding cone, tightening bolt, and its bolt head.

(1) Completely degrease the boss hole and the shaft that comes into contact with it.
(2) Slide the shrink disk onto the output shaft (hollow shaft). Do not tighten the tightening bolts until the driven shaft is inside the output shaft (hollow shaft).
(3) Slide the driven shaft or drive, then insert the driven shaft into the output shaft (hollow shaft).
(4) When tightening the bolts, ensure the surfaces of both plates are parallel. A spanner with a short handle is suitable for this task.
(5) After confirming that the shrink disk is properly set, start tightening the tightening bolts using a spanner with a suitable length.
Tighten the bolts clock-wise (not diagonally), uniformly, and in order, while keeping both plates parallel. Tightening each bolt 30 degrees at a time is recommended when doing this.
(6) Always check the shrink disk after tightening using a torque wrench. The specified torque is indicated on the nameplate of the shrink disk.
(7) Finally, check if both plates are parallel.

Note) Operate after installing the shrink disks by the procedure described above.
There is no lubrication on the contact portion of the output shaft (hollow shaft) and the drive shaft. Therefore, scratches and galling will occur on the shaft if it is rotated without being correctly installed.

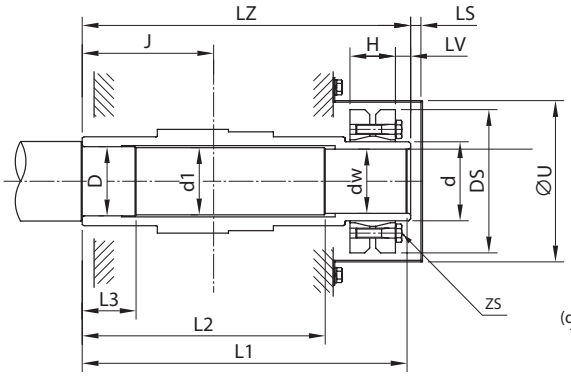

Figure J16 Shrink disk system
Output shaft (hollow shaft) dimensions

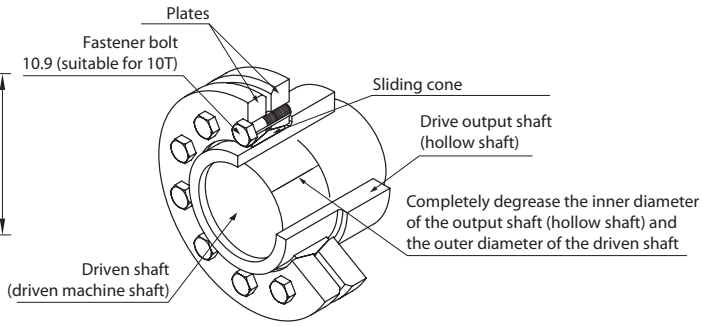

Figure J17 Shrink disk structure

3. Removing the shrink disk

- Carry out the removal of the shrink disks in the opposite order of the installation procedure.
- Loosen the bolts gradually and in order, so that the two plates do not tilt on the sliding cone.
- Never remove the bolts if the two plates are not parallel. Both plates may suddenly fly out of the sliding cone and injury is possible. Accordingly, slightly loosen all bolts and insert wedges between the plates to achieve a parallel state.

Output Shaft (Hollow Shaft) Handling Document

Table J9 Shrink disk design reference dimensions

Frame size	Shrink disk							Output shaft (hollow shaft)				
					Tightening bolt						Safety cover	
	Nomenclature	d	DS	H	ZS	Strength Classification	TA N·m	J	LZ	LV	LS	U
HZ522 HZ523 HZ524	S-45×55	55	100	30	M6	10.9	11.8	78	196	5	18	115
HA635	S-55×68	68	115	30	M6	10.9	11.8	112	264	5	31	152

Frame size	Driven shaft (Recommended design dimensions)					
	dw	d1	D	L1	L2	L3
HZ522 HZ523 HZ524	45h6	44.5	45h6	193	140	55
HA635	55h6	54.5	55h6	261	200	65

Table J10 Specified tightening torque of the tightening bolt

Strength class	JIS 10.9
Tightening torque (N·m)	11.8

Table J11 Shrink disk installation position specifying code

Shrink disk installation position		Specifying code
Seen from the motor side	Right	R61
	Left	R62

Notes

» HYPONIC® Drive

» PREST®NEO

» Bevel BUDDYBOX®
H series

K

Motors & Brakes

Motor Specifications

Motors and Brakes

■ Motor Nomenclature

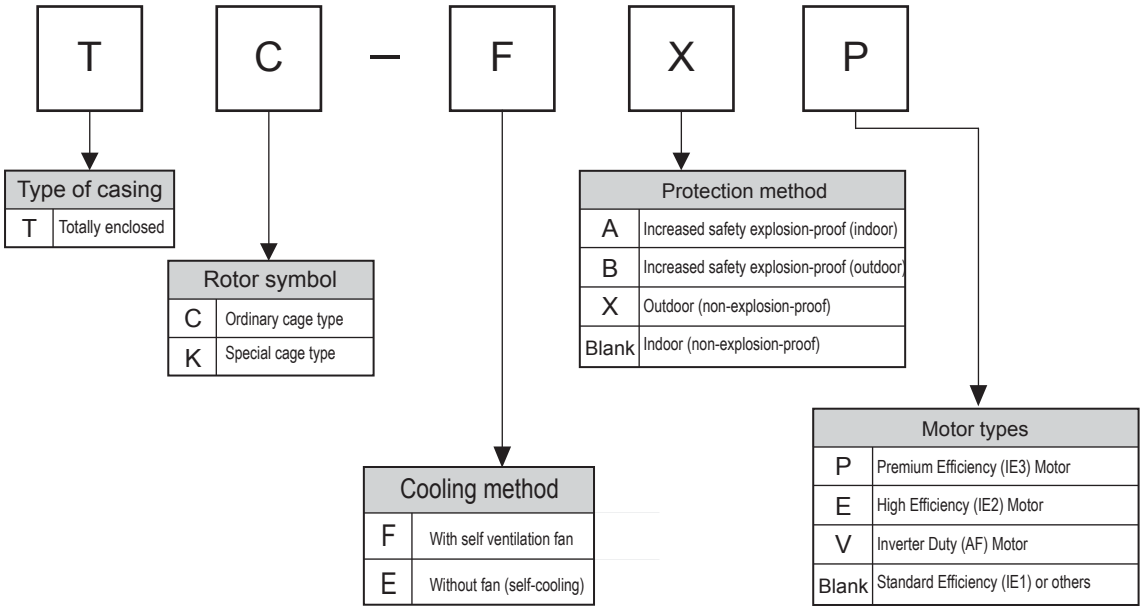

■ Dimension of Terminal Box

3-phase

IE3 motors 0.75kW~11kW (4-pole)

(mm)

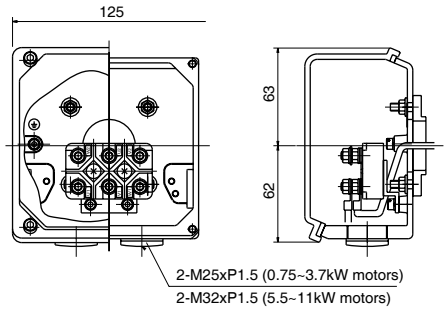

■ Mounting of Terminal Box

Mounting direction of a terminal box may be changed by 90˚. Specify a direction according to the Figs below. The direction must be changed by Sumitomo.

Hollow shaft type (RNYM series)	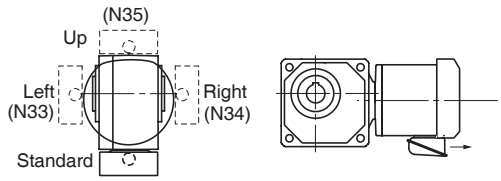

The directions indicated as above are viewed from the opposite side of motor fan cover.
Arrows indicate lead wire opening direction.

■ Characteristics of Premium Efficiency (IE3) Motors

■ 200V Class 50Hz

kW	P	Frame Size	220V-50Hz						230V-50Hz						240V-50Hz					
			Rated Current	Efficiency	Breake down Torque	Starting Torque	Starting Current	Rated Speed	Rated Current	Efficiency	Breake down Torque	Starting Torque	Starting Current	Rated Speed	Rated Current	Efficiency	Breake down Torque	Starting Torque	Starting Current	Rated Speed
			A	%	%	%	A	r/min	A	%	%	%	A	r/min	A	%	%	%	A	r/min
0.75	4	N-80M	3.46	84.7	402	383	21.1	1430	3.54	84.6	446	423	22.8	1440	3.65	84.1	484	461	23.0	1450
1.1	4	N-90S	4.49	85.4	343	296	28.6	1430	4.50	85.6	387	336	30.3	1440	4.57	85.5	422	368	31.5	1440
1.5	4	N-90L	6.10	85.4	338	304	37.0	1420	6.17	85.8	375	338	38.9	1430	6.29	85.4	406	366	40.4	1440
2.2	4	N-100L	8.58	88.6	418	344	68.3	1440	8.56	88.7	465	382	71.9	1450	8.83	88.3	502	412	74.6	1450
3.0	4	N-112S	11.3	87.8	365	316	80.1	1430	11.2	87.9	419	352	85.7	1440	11.3	87.9	458	387	89.1	1440
3.7	4	N-112M	13.5	89.6	378	266	105	1460	13.7	89.0	420	294	110	1460	13.9	89.2	453	319	115	1460
4.0	4	N-112M	14.4	88.9	378	266	105	1450	14.4	89.1	388	273	105	1460	14.5	89.0	418	294	105	1460

■ 400V Class 50Hz

kW	P	Frame Size	380V-50Hz						400V-50Hz						415V-50Hz					
			Rated Current	Efficiency	Breake down Torque	Starting Torque	Starting Current	Rated Speed	Rated Current	Efficiency	Breake down Torque	Starting Torque	Starting Current	Rated Speed	Rated Current	Efficiency	Breake down Torque	Starting Torque	Starting Current	Rated Speed
			A	%	%	%	A	r/min	A	%	%	%	A	r/min	A	%	%	%	A	r/min
0.75	4	N-80M	2.00	84.7	402	383	12.2	1430	2.05	84.6	446	423	13.2	1440	2.11	84.1	484	461	13.3	1450
1.1	4	N-90S	2.59	85.4	343	296	16.5	1430	2.60	85.6	387	336	17.5	1440	2.64	85.5	422	368	18.2	1440
1.5	4	N-90L	3.52	85.4	338	304	21.4	1420	3.56	85.8	375	338	22.5	1430	3.63	85.4	406	366	23.3	1440
2.2	4	N-100L	4.96	88.6	418	344	39.4	1440	4.95	88.7	465	382	41.5	1450	5.10	88.3	502	412	43.1	1450
3.0	4	N-112S	6.50	87.8	365	316	46.3	1430	6.45	87.9	419	352	49.5	1440	6.55	87.9	458	387	51.4	1440
3.7	4	N-112M	7.80	89.6	378	266	60.6	1460	7.90	89.0	420	294	63.6	1460	8.00	89.2	453	319	66.2	1460
4.0	4	N-112M	8.30	88.9	378	266	60.6	1450	8.30	89.1	388	273	63.8	1460	8.35	89.0	418	294	66.2	1460
5.5	4	N-132S	11.5	90.6	471	316	109	1460	11.6	90.6	524	351	114	1460	11.9	90.2	564	378	119	1470
7.5	4	N-132M	15.8	90.8	315	213	97.9	1460	16.0	91.2	350	236	103	1460	16.2	90.6	378	254	107	1470
11	4	N-160M	22.3	91.4	283	200	129	1460	22.2	91.6	322	229	138	1460	22.4	91.6	354	249	145	1470

■ 200V / 400V Class 60Hz

kW	P	Frame Size	220V-60Hz						400V-60Hz						440V-60Hz					
			Rated Current	Efficiency	Breake down Torque	Starting Torque	Starting Current	Rated Speed	Rated Current	Efficiency	Breake down Torque	Starting Torque	Starting Current	Rated Speed	Rated Current	Efficiency	Breake down Torque	Starting Torque	Starting Current	Rated Speed
			A	%	%	%	A	r/min	A	%	%	%	A	r/min	A	%	%	%	A	r/min
0.75	4	N-80M	3.12	85.5	344	308	19.7	1720	1.78	86.6	384	346	12.0	1730	1.80	86.5	481	438	13.3	1740
1.1	4	N-90S	4.18	86.2	291	233	25.5	1720	2.33	86.9	328	264	15.6	1730	2.28	87.5	411	338	17.4	1740
1.5	4	N-90L	5.72	86.1	284	235	33.2	1710	3.24	87.3	325	271	20.5	1730	3.13	87.7	407	345	22.8	1730
2.2	4	N-100L	7.92	89.2	355	260	61.2	1730	4.44	89.8	402	297	37.5	1740	4.33	90.2	500	380	41.8	1750
3.0	4	N-112S	10.65	87.3	325	256	74.9	1720	5.85	89.5	358	282	45.5	1730	5.60	89.7	452	368	50.7	1740
3.7	4	N-112M	12.82	89.6	330	217	93.1	1750	7.15	90.1	370	243	57.3	1750	6.90	90.6	452	300	63.0	1760
5.5	4	N-132S	21.20	91.9	471	355	217.0	1770	10.90	91.7	524	286	98.1	1760	10.60	91.9	564	355	109.0	1770
7.5	4	N-132M	29.0	92	315	244	195	1770	15	91.8	350	199	90	1760	14.5	92	378	244	98	1770
11	4	N-160M	42.4	92.6	283	262	299.0	1770	21.6	92.5	322	210	134	1760	21.2	92.6	354	262	149	1770

Note: The above values subjected to changes without prior notice

■ Motor Brake specifications

Electromagnetic Brake Specifications and Applicable Motor Output

Motor Power (kW)	Brake Type	Brake Torque (Kinetic Friction) (Nm)	Moment of Inertia (kg·m²)	Motion Delay Time (Sec)			Allowable Work E_0 (J/min)	Work up to Gap Adjustment (x10 J)	Total Work E_1 (x10^7J)	Gap	
				Normal Brake Action for IE3 Motors	Brake Action for Inverter Controlled Motors	Fast Brake Action				Default (Initial Value) (mm)	Limit Value (mm)
0.75	FB-1E	7.5	0.00258	0.25 ～ 0.45	0.15 ～ 0.25	0.01 ～ 0.025	2580	11.6	38.7	0.25 ～ 0.35	0.6
1.1	FB-1HE	11	0.00396	0.45 ～ 0.65	0.25 ～ 0.35		3360	20.8	46.3		0.75
1.5	FB-2E	15	0.00450	0.35 ～ 0.55	0.15 ～ 0.25						
2.2	FB-3E	22	0.00978	0.7 ～ 0.9	0.35 ～ 0.45	0.015 ～ 0.035	5720	26.3	105.3		0.85
3.0	FB-4E	30	0.0110	0.65 ～ 0.85	0.25 ～ 0.35						
3.7	FB-5E	40	0.0209	1.15 ～ 1.35	0.35 ～ 0.45		6900	57.4	382.8	0.35 ～ 0.45	1.0
5.5	FB-8E	55	0.0306	1.1 ～ 1.3	0.25 ～ 0.35						
7.5	FB-10E	80	0.0450	1.65 ～ 1.85	0.55 ～ 0.65	0.02 ～ 0.04	10800	110.2	551.1		1.2
11	FB-15E	110	0.0602	1.6 ～ 1.8	0.45 ～ 0.55						

- This table summarizes the specifications for the standard brakes. The specifications for the special brakes may differ from those in this table.
- When the motor begins to be used, the predetermined brake torque may be unable to be reached due to the friction surface. In this case, perform lapping of the friction surface by turning on and off repeatedly with the possible lightest load.
- To improve the stopping accuracy or for the lifter, use a fast brake action.
- The lining friction sound may be generated because of the brake construction while the motor is in operation; however, the brake performance is all right.
- When the motor operates with inverter, the noise level from the brake section may increase for the reason of the brake construction; however, the brake performance is all right.
- When a motor with brake operates at a low speed for a long time, the temperature rise of the brake is larger because the cooling effect of the fan decreases. If you desire to use a motor in this manner, use an inverter motor.
- If the motor is used beyond the allowable work E_0, the brake may be failed (braking failure). Make sure that the braking work is not larger than the allowable work E_0. (check this also when the motor needs emergency stop.)

Brake Currents

Brake Type	AC200V/50,60Hz			AC220V/60Hz			AC400V/50,60Hz			AC440V/60Hz		
	Brake Voltage V_{dc2} (V)	Brake Current I_{dc2} (A)	Rectifier Current I_{ac1} (A)	Brake Voltage V_{dc2} (V)	Brake Current I_{dc2} (A)	Rectifier Current I_{ac1} (A)	Brake Voltage V_{dc2} (V)	Brake Current I_{dc2} (A)	Rectifier Current I_{ac1} (A)	Brake Voltage V_{dc2} (V)	Brake Current I_{dc2} (A)	Rectifier Current I_{ac1} (A)
FB-1E	DC90	0.2	0.2	DC99	0.3	0.2	DC180	0.1	0.1	DC198	0.2	0.1
FB-1HE		0.5	0.4		0.5	0.4		0.2	0.2		0.3	0.2
FB-2E												
FB-3E		0.6	0.5		0.6	0.5		0.3	0.2		0.3	0.3
FB-4E												
FB-5E		0.9	0.7		1.0	0.8		0.5	0.4		0.5	0.4
FB-8E												
FB-10E		1.1	0.8		1.2	0.9		0.6	0.4		0.6	0.5
FB-15E												

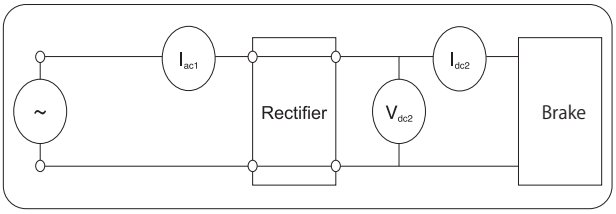

■ Precautions on Using Fast Brake Action

When using a brake with fast brake action, note the following precautions:

- Connect a varistor (protection device) to the brake in order to protect the fast brake circuit contact from surge voltages generated by braking.
- Connect the wire of the fast brake circuit contact to the secondary of the brake power source contact. Otherwise, the contact may not be protected.
- If an AC electromagnetic switch is used for the fast brake circuit contact, refer to below table.

If two or more contacts are required, note the following precautions:

- Connect the electromagnetic contactor contacts in series (refer to Fig.on the right).
- Take the shortest way when connecting the varistor (VR) to the brake (refer to Fig on the right).

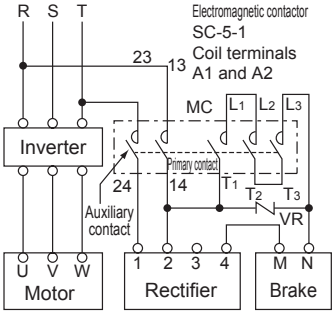

Connection example where two or more are used with the Fast Action Brake

Recommended Contactors and Varistors for Fast Brake Action

AC Voltage	Brake Type	Recommended Contactor Type: Made by Fuji Electric FA Components & Systems Co., Ltd.		Recommended Contactor Type: Made by Mitsubishi Electric Corporation		Recommended Contactor Contact Capacity (DC-13 Class)		Recommended Varistor (for Contactor Contact): Varistor Type	Maximum Allowable Circuit Voltage	Varistor Voltage	Rated Power
200V 220V	FB-1E	SC-05	Number of contacts in series 1 (0.7A)	S-N11 or S-N12	Number of contacts in series 1 (1.2A)	DC 110V	0.7A and over	TND10V-471KB00AAA0	AC300V	470V (423~517V)	0.4W
	FB-1HE FB-2E FB-3E FB-4E	SC-05	Number of contacts in series 2 (3.0A)	S-N11 or S-N12	Number of contacts in series 2 (3.0A)		1.5A and over	TND14V-471KB00AAA0			0.6W
	FB-5E	SC-05	Number of contacts in series 3 (4.0A)	S-N18	Number of contacts in series 3 (5.0A)		3.0A and over				
	FB-8E										
	FB-10E	SC-5-1	Number of contacts in series 3 (10A)	S-N20 or S-N21	Number of contacts in series 3 (10A)		6.5A and over	TND20V-471KB00AAA0			1.0W
	FB-15E										
400V 440V	FB-1E	SC-05	Number of contacts in series 1 (2.0A)	S-N11 or S-N12	Number of contacts in series 2 (2.0A)	DC 220V	0.5A and over	TND14V-821KB00AAA0	AC510V	820V (738~902V)	0.6W
	FB-1HE FB-2E						1.0A and over	TND20V-821KB00AAA0			1.0W
	FB-3E FB-4E										
	FB-5E FB-8E						1.5A and over				
	FB-10E	-	-	S-N11 or S-N12	Number of contacts in series 3(2.0A)		3.0A and over				
	FB-15E										

- The above table lists contactors of certain brands. Contactor made by other manufacturers of equivalent performance are acceptable.
- The "Recommended Contactor Contact Capacity" column lists the values assuming the electric switching durability (lifetime) is about 200 million times.
- For the recommended contactors made by Mitsubishi, S-N11 is equipped with one auxiliary contact, and S-N18 is equipped with no auxiliary contact. Note this point if two or more auxiliary contacts are required, for example, for inverter drive. (The other contactors listed in Table EM14 are equipped with two or more auxiliary contacts.)
- The varistor recommended in the above table is manufactured by Nippon Chemi-Con Corporation. Varistor made by other manufacturer with the equivalent performance is acceptable.

Why the fast braking circuit shortens the braking time.

The differences between the normal and fast brake action are as shown in diagrams A and B. Diagrams C and D show how current decay proceeds in the normal and fast brake action.

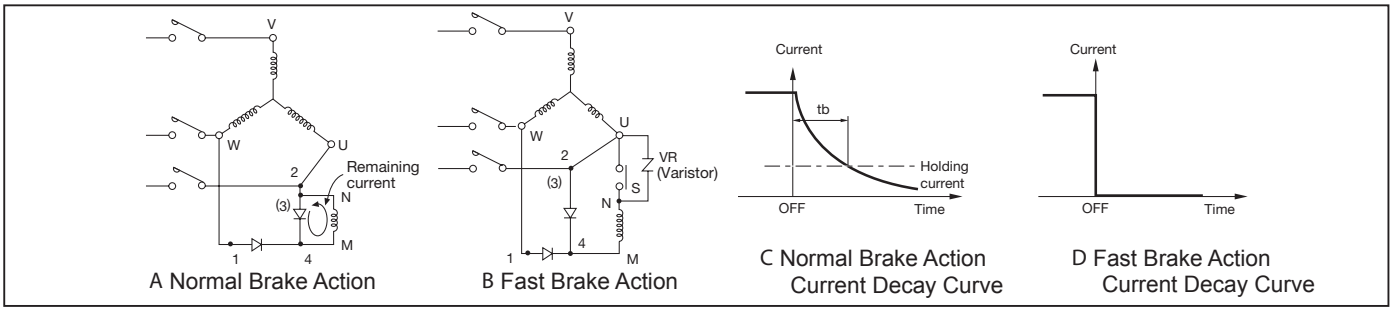

A Normal Brake Action

B Fast Brake Action

C Normal Brake Action Current Decay Curve

D Fast Brake Action Current Decay Curve

The brake coil has inductance L. For the normal brake action (diagram A), the remaining current flows due to the energy saved in L even after the power is turned off. The remaining current decays as shown by the curve in diagram C.
When it is connected for the fast brake action in diagram B and S is released at the same time the power goes off, the closed circuit with the brake coil is not made; the remaining current stops as shown in diagram D.

Therefore, it shortens the braking time by time tb, resulting in fast braking. In summary, the fast brake action circuit stops the remaining current in response to turning on or off the brake coil at the same time when the power goes on or off.
(VR varistor must be used to protect the rectifier and contact S.)

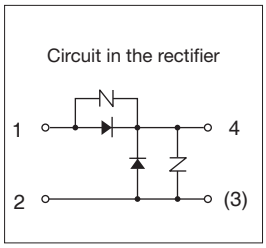

■ Calculation of Braking Work and Braking Time

○Braking Work E_B (J , kgf·m)

The braking work, which varies significantly depending on the speed or load conditions of the motor, can be obtained by using the formulas below:

[International System of Units]

$$E_B = \frac{(J_L + J_M) \cdot N^2}{182} \times \frac{T_B}{T \pm T} \quad (J)$$

J_L : Total moment of Inertia for motor without brake (converted at motor shaft) [kg•m²]
J_M : Moment of Inertia for motor with brake [kg•m²]
N : Motor speed at braking timee [r/min]
T_B : Braking Torque [N•m]
T_R : Load Torque [N•m]

[Gravitational System]

$$E_B = \frac{(GD^2_L + GD^2_M) \cdot N^2}{7150} \times \frac{T_B}{T_B \pm T_R} \quad (kgf \cdot m)$$

GD^2_L : Total moment of Inertia for motor without brake (converted at motor shaft) [kg•m²]
GD^2_M : Moment of Inertia for motor with brake [kg•m²]
N : Motor speed at braking timee [r/min]
T_B : Braking Torque [N•m]
T_R : Load Torque [N•m]

Sign of T_R +: When turnig off the power, the load torque works as the brake (positive load)
- : When turning off the power, the load torque does not work as the brake (negative load)

Obtain the work per minute from both the braking work E_B and the number of braking times per minute (note), and check that it is equal to or small than the allowable work E_0.

In addition, if the brake operates after the speed slows by the inverter or the like, consider the braking energy generated from high-speed rotation as well, taking into account an emergency stop that is due to a blckout.

If it is used beyond the allowable work, the brake friction surface, decrease in brake torque, damage of the lining, etc. The brake allowable work is for checking the temperature rise on the brake friction surface. In addition, consider the gearmotor start and stop frequencies.

Note: If the brake works once every several minutes to several hours, obtain the work assuming that the frequency is 1 time per minute.

○Braking Time t_B (sec)

[International System of Units]

$$t_B = \frac{(J_L + J_M) \times N}{9.55 \times (T_B \pm T_R)} + t_D \quad (sec)$$

J_L : Total moment of Inertia for motor without brake (converted at motor shaft) [kg•m²]
J_M : Moment of Inertia for motor with brake [kg•m²]
N : Motor speed at braking timee [r/min]
T_B : Braking Torque [N•m]
T_R : Load Torque [N•m]
t_D : Operation Lag Time [sec]

[Gravitational System]

$$t_B = \frac{(GD^2_L + GD^2_M) \times N}{375 \times (T_B \pm T_R)} + t_D \quad (sec)$$

GD^2_L : Total moment of Inertia for motor without brake (converted at motor shaft) [kg•m²]
GD^2_M : Moment of Inertia for motor with brake [kg•m²]
N : Motor speed at braking timee [r/min]
T_B : Braking Torque [N•m]
T_R : Load Torque [N•m]
t_D : Operation Lag Time [sec]

Sign of T_R +: When turnig off the power, the load torque works as the brake (positive load)
- : When turning off the power, the load torque does not work as the brake (negative load)

○Lining Lifetime Z_L (times)

The brake lining is worn away by being used. The abrasion significantly varies with friction surface, slipping velocity, ambient conditions, temperature, and other factors; the accurate lifetime can hardly be calculated. An approximate lifetime (times) can, however, be obtained using the following formula:

$$Z_L = \frac{E_t}{E_B} \quad [times]$$

E_t : Total Work [J]

Brake Construction Drawing

FB-1E~4E (0.75~3.0kW x 4 poles)

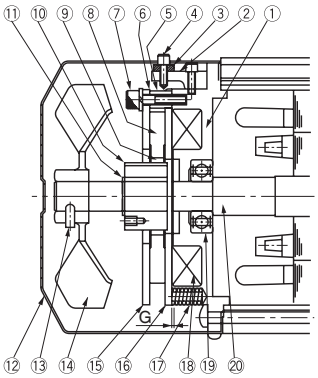

Part No.	Description	11	Shaft retaining C-ring
1	Stationary core	12	Cover
2	Release fitting	13	Fan set bolt
3	Manual release protection spacer	14	Fan
4	Brake release bolt	15	Fixed plate
5	Spacer	16	Armature plate
6	Gap adjusting shim	17	Spring
7	Assembling bolt	18	Electromagnetic coil
8	Brake lining	19	Ball bearing
9	Leaf spring	20	Motor shaft
10	Boss		

FB-5E~8E (3.7~5.5kW x 4 poles)

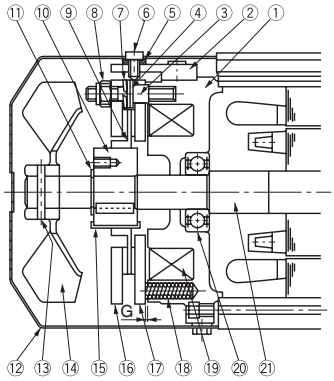

Part No.	Description	11	Shaft retaining C-ring
1	Stationary core	12	Cover
2	Release fitting	13	Spring pin
3	Stud bolt	14	Fan
4	Adjusting washer	15	Leaf spring
5	Manual release protection spacer	16	Fixed plate
6	Brake release bolt	17	Armature plate
7	Spring washer	18	Spring
8	Gap adjusting nut	19	Electromagnetic coil
9	Brake lining	20	Ball bearing
10	Boss	21	Motor shaft

FB-10E~15E (7.5~11kW x 4 poles)

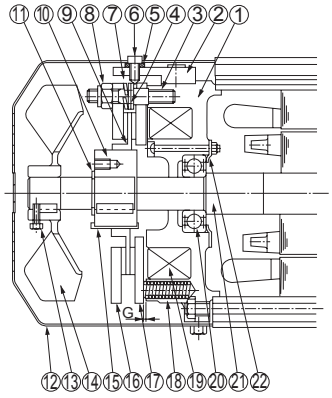

Part No.	Description	12	Cover
1	Stationary core	13	Fan set bolt
2	Release fitting	14	Fan
3	Stud bolt	15	Leaf spring
4	Adjusting washer	16	Fixed plate
5	Manual release protection spacer	17	Armature plate
6	Brake release bolt	18	Spring
7	Spring washer	19	Electromagnetic coil
8	Gap adjusting nut	20	Ball bearing
9	Brake lining	21	Motor shaft
10	Boss	22	Bearing cover
11	Shaft retaining C-ring		

■ Manual Releasing of FB Brake

To release the brake manually, follow the steps as below:

- Release two of the brake releasing bolts diagonally and remove the spacer. Then put back the bolts with a hexagon wrench until the brake will be released. Carefully screw the releasing bolts as the brake is being released.
- After the brake is released, put back the spacer in place for safety.

Note: Brake release unit is supplied as standard specifications to FB-1E and above.

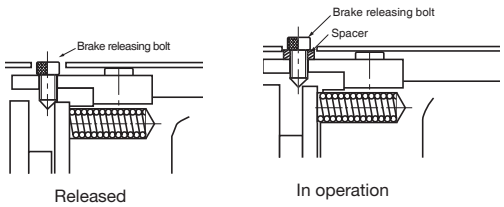

■ Brake Release Lever (optional)

A manual hand release lever, as an option, may be attached to the motor. Designate it, if necessary, when placing the order. The brake can be released manually only by pushing down the lever.

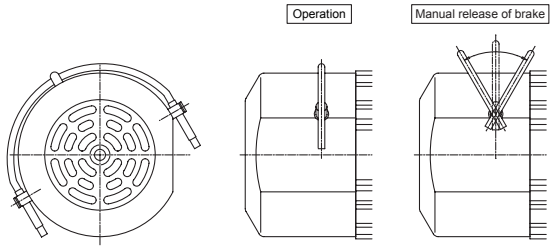

Operating procedure of Manual Release:

- To release the brake, pull the lever from the holder, and turn it down toward the load or anti-load side.
- When the motor is in operation (the brake is actuated), be sure to return the lever to the holder.

Note: Before starting the motor, make sure the brake is actuated.

Wiring Connection

■ Wiring Connection

• Wiring diagram for standard motors

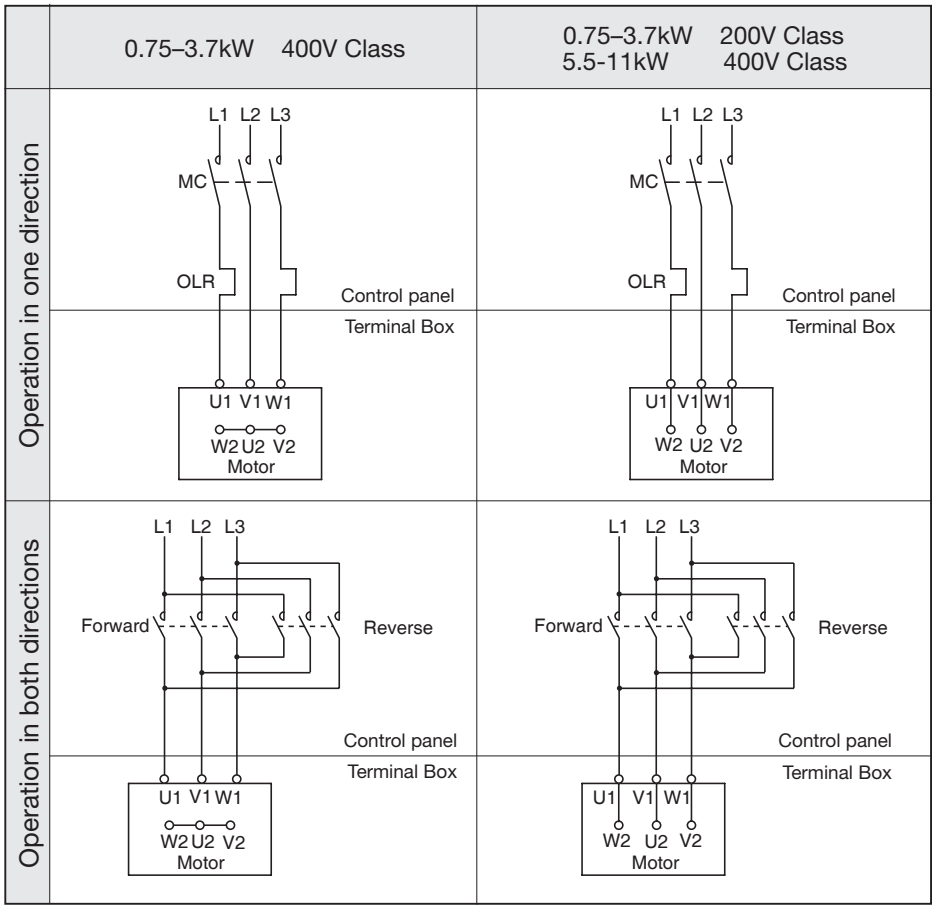

Note:

MC: Electromagnetic contactor
OLR: Overload relay or thermal relay

These should be furnished by the customer.

Example of wiring

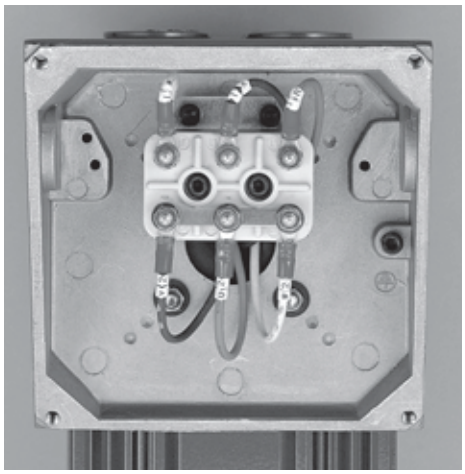

0.75–3.7kW 400V Class

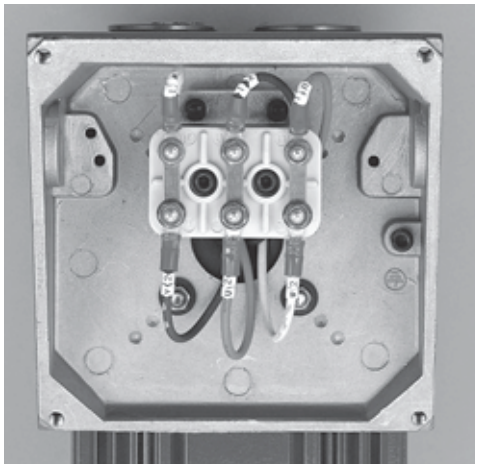

0.75–3.7kW 200V Class
5.5-11kW 400V Class

• Wiring Connection (5.5~11kW, 400V)

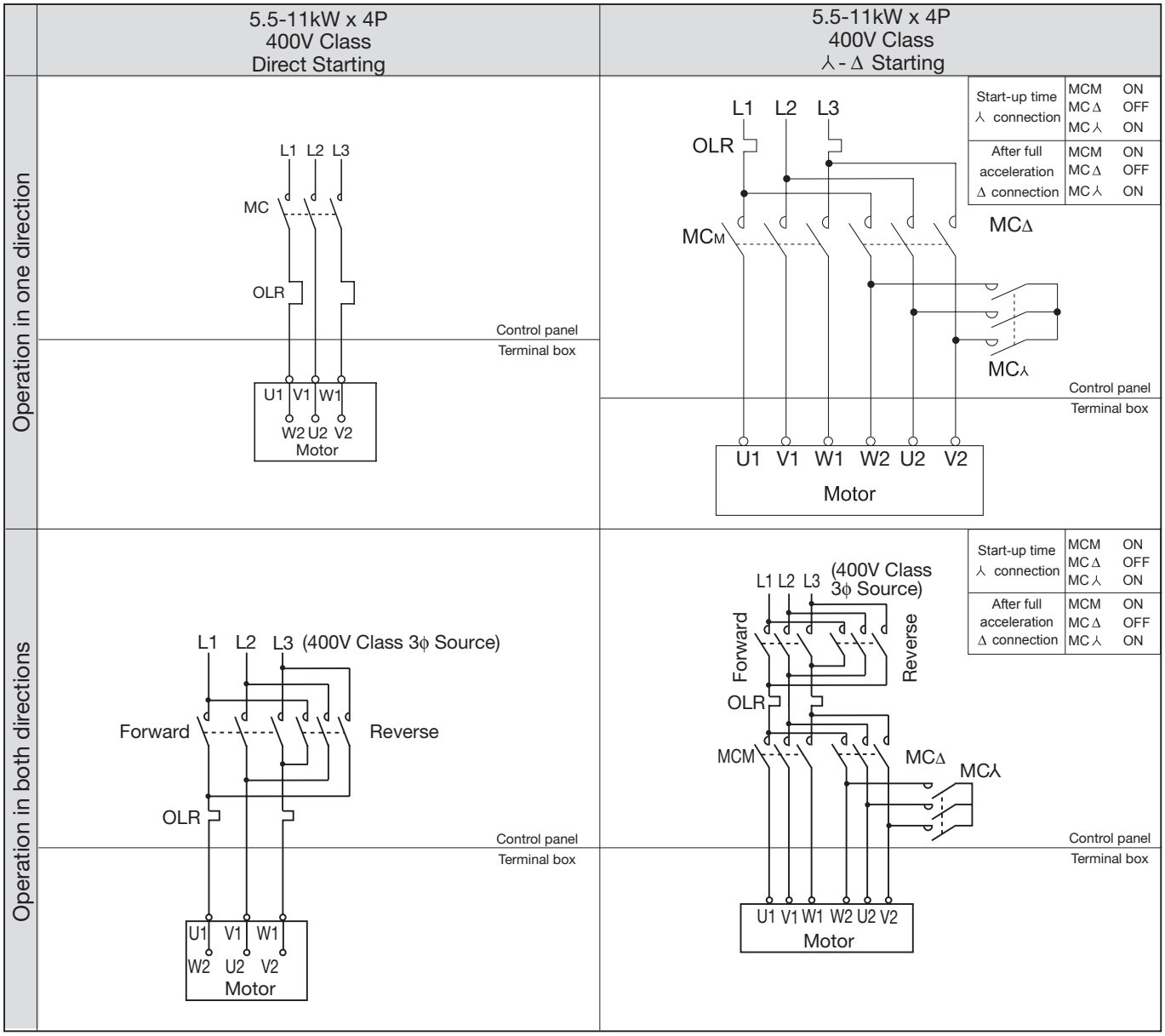

MC: Electromagnetic contactor and

OLR: Overload relay or thermal relay are not supplied by Sumitomo.

Wiring Connection

• Wiring Connection for motors with brakes

(0.75~3.7kW)

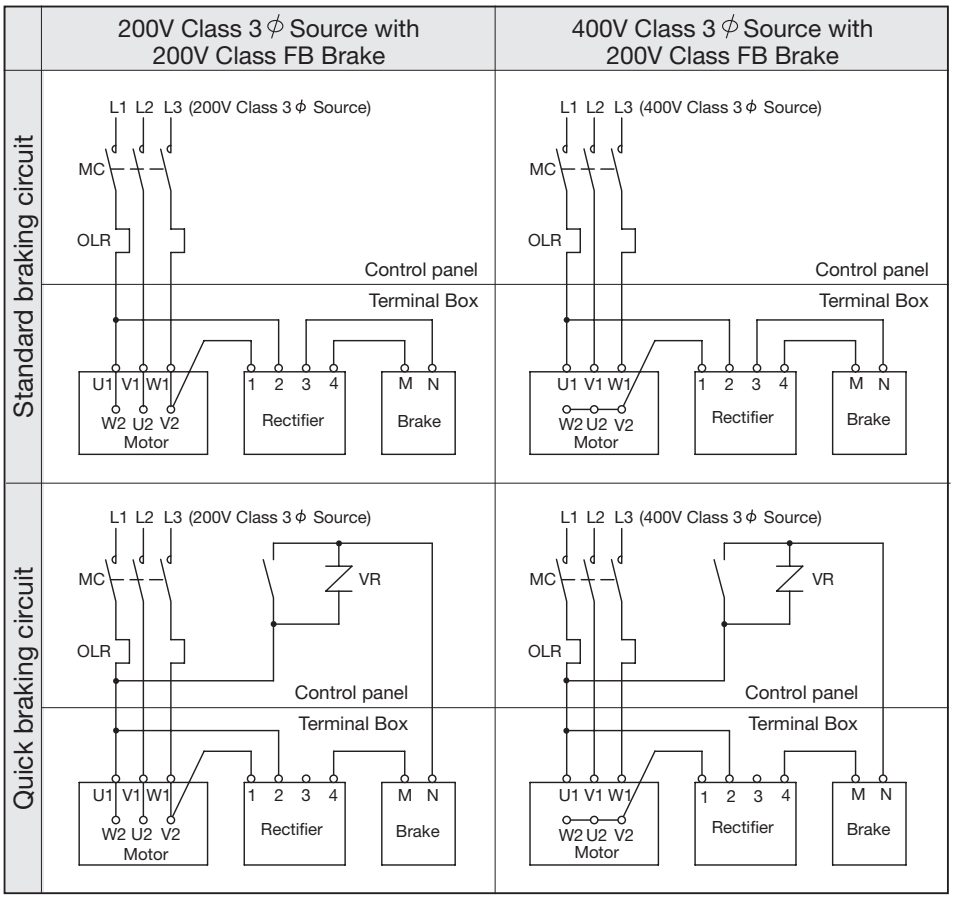

For Connector(MC) and varistor information, refer to page K5.

(5.5~11kW)

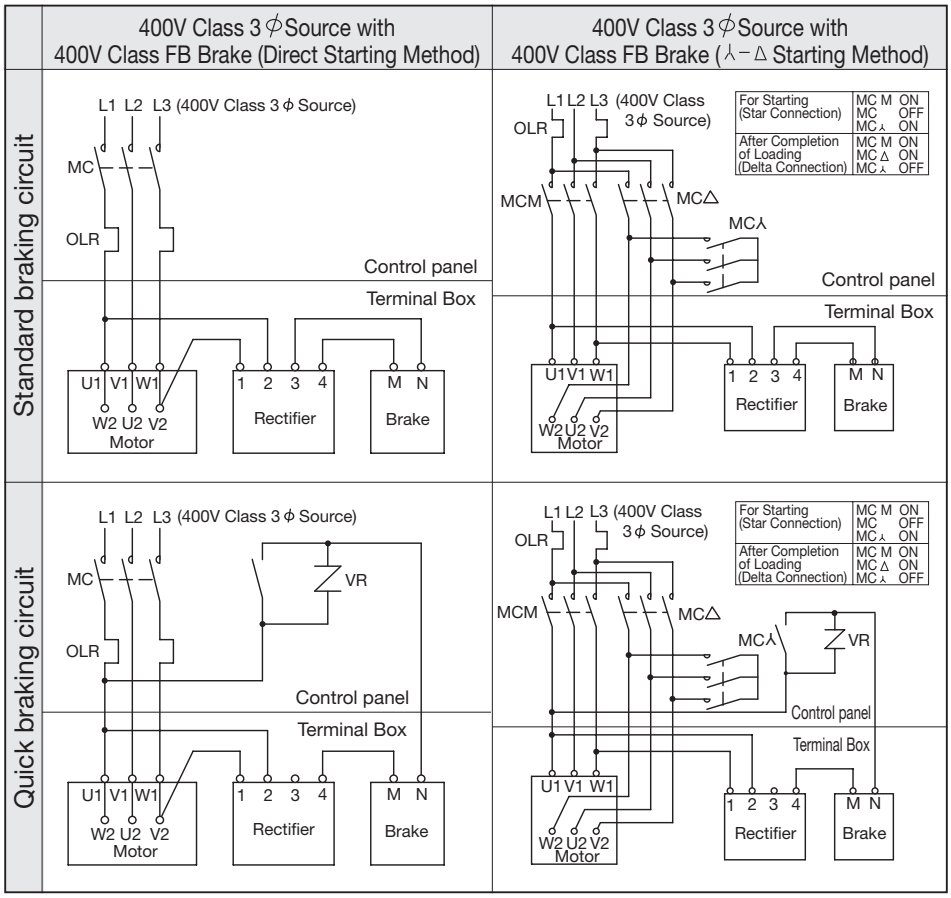

For Connector(MC) and varistor information, refer to page K5.

MOTOR SPECIFICATIONS

- **Wiring Connection for motors with brakes for Forward & Reverse connections**

(0.75~3.7kW)

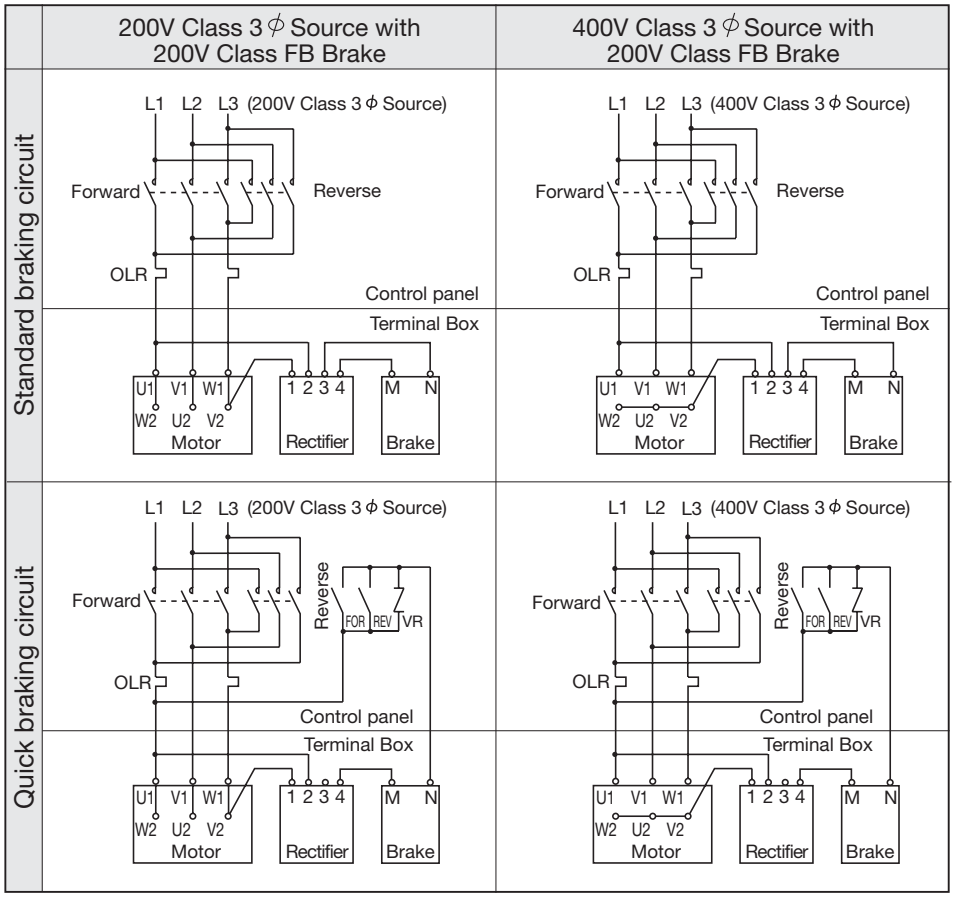

For Connector(MC) and varistor information, refer to page K5.

(5.5~11kW)

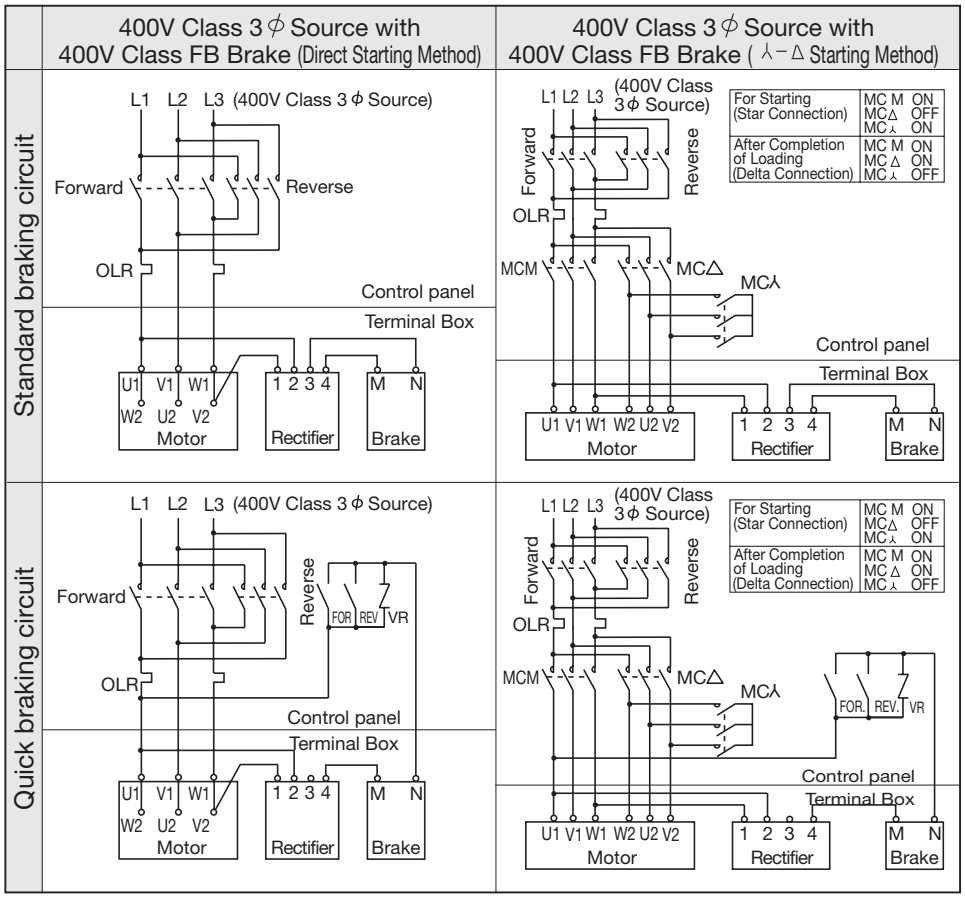

For Connector(MC) and varistor information, refer to page K5.

MOTOR SPECIFICATIONS

Moment of Inertia / GD²

■ Moment of Inertia / GD² and Starting Time

To start the driven machine completely, the starting torque has to be sufficiently larger than the load torque and the motor torque has to exceed the load torque constantly from the start of operation to the achievement of the full-load speed.
The acceleration torque is the difference between the motor torque and the load torque during the starting period. Assuming the average acceleration torque to be $\overline{T}a$ (N·m, kgf·m), the starting time ts (s) until the rotation speed n (r/min) is calculated by the following formula using the moment of inertia or GD^2.

$$ts = \frac{(J_M+J_C+J_L)/n}{9.55\cdot\overline{T}a} \quad (S) \qquad\qquad ts = \frac{(GD_M^2+GD_C^2+GD^2)/n}{375\cdot\overline{T}a} \quad (S)$$

However, J_M: Inertia moment of the motor (including the brake drum) (kg-m²)
J_C: Inertia moment of CYCLO Drive (kg-m²)
J_L : The moment of inertia (kg·m²) of driven machines (including couplings and pulleys) converted to the motor shaft.

GD_M^2 : GD^2 of the motor (including brake drum) (kgf·m²)
GD_C^2 : GD^2 of the cyclo drive (kgf·m²)
GD_L^2 : GD^2 (kgf·m²) of driven machines (including couplings and pulleys) converted to the motor.

Average acceleration torque $\overline{T}a$

Here the average torque means the difference between the motor torque and load torque as shown in the right figure, which is the average value of the actual torque to accelerate the load. To calculate the starting time, the motor torque curve and load torque curve are required. However, in this method, it is very difficult to calculate the average acceleration torque, so the average acceleration torque with the actual load is calculated as follows:
In the case of full voltage starting, $\overline{T}a$ [N・m, kgf・m] of the average acceleration torque during the starting period is calculated approximately by the following formula.

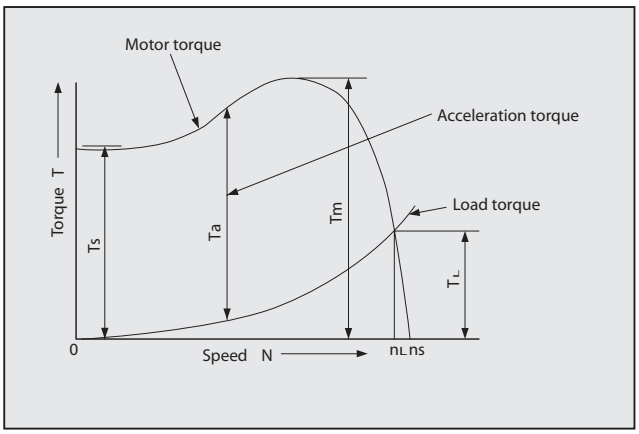

Figure C3 Torque diagram

Ts: Starting torque
Tm: Maximum torque (stall torque)
Ta: Acceleration torque
TL: Full-load torque
ns: Synchronization rotation speed
nL: Full-load rotation speed

$$\overline{T}a \fallingdotseq 0.8\left(\frac{Ts+Tm}{2}\right) - \overline{T}_L (N\cdot m, kgf\cdot m)$$

Also, the average load torque $\overline{T}L$ (N・m, kgf・m) during the starting period will be as follows if the motor full-load torque is TL:

In the case of constant load torque: $\overline{T}_L \fallingdotseq T_L$ (N・m, kgf・m)
In the case of double reduction torque: $\overline{T}_L \fallingdotseq 0.34T_L$ (N・m, kgf・m)

MOTOR SPECIFICATIONS

■Calculation Method for the Moment of Inertia J

(1) Inertia moment of the rotor

If the rotation shaft passes through the center of gravity		If the rotation shaft does not pass through the center of gravity	
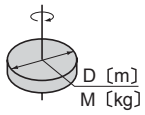	$J=\frac{1}{8}MD^2$[kg-m²]	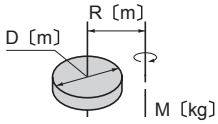	$J=\frac{M}{4}\left(\frac{1}{2}D^2+4R^2\right)$ [kg·m²]
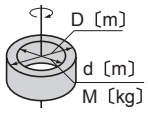	$J=\frac{1}{8}M(D^2+d^2)$[kg-m²]	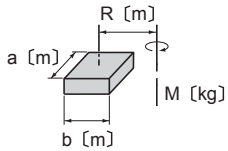	$J=\frac{M}{4}\left(\frac{a^2+b^2}{3}+4R^2\right)$ [kg·m²]
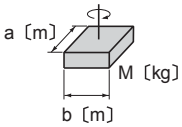	$J=\frac{1}{12}M(a^2+b^2)$[kg-m²]	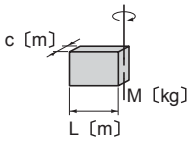	$J=\frac{1}{12}M(4L^2+C^2)$ [kg-m²]

(2) Inertia moment of the linear motion (inertia moment in the load-side shaft)

General purpose	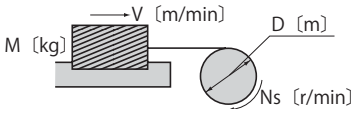	$J=\frac{M}{4}\left(\frac{V}{\pi\cdot Ns}\right)^2=\frac{M}{4}D^2$ [kg·m²]
Horizontal movement by the conveyor	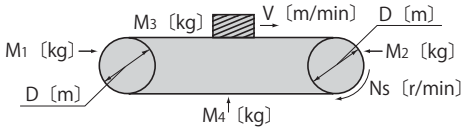	$J=\frac{1}{4}\left(\frac{M_1+M_2}{2}+M_3+M_4\right)\times D^2$ [kg·m²]
Horizontal movement by the lead screw	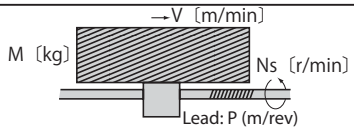	$J=\frac{M}{4}\left(\frac{V}{\pi\cdot Ns}\right)^2=\frac{M}{4}\left(\frac{P}{\pi}\right)^2$ [kg·m²]
Vertical movement by the hoisting machine	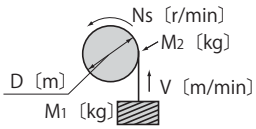	$J=\frac{M_1D^2}{4}+\frac{1}{8}M_2D^2$ [kg·m²]

(3) Conversion to the motor shaft (input shaft)

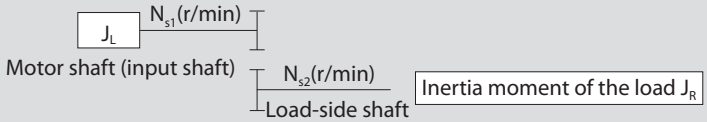

$$J_L=\left(\frac{N_{s2}}{N_{s1}}\right)^2J_R=\left(\frac{1}{Z}\right)^2J_R$$

Z: Total reduction ratio

MOTOR SPECIFICATIONS

Moment of Inertia / GD²

Calculation Method for GD²

(1) GD² of the rotor

If the rotation shaft passes through the center of gravity		If the rotation shaft does not pass through the center of gravity	
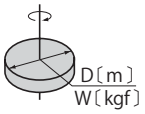	$GD^2=\frac{1}{2}WD^2$ [kgf·m²]	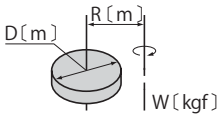	$GD^2=W\left(\frac{1}{2}D^2+4R^2\right)$ [kgf·m²]
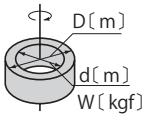	$GD^2=\frac{1}{2}W(D^2+d^2)$ [kgf·m²]	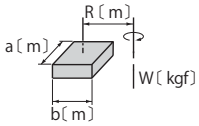	$GD^2=W\left(\frac{a^2+b^2}{3}+4R^2\right)$ [kgf·m²]
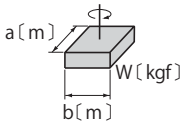	$GD^2=\frac{1}{3}W(a^2+b^2)$ [kgf·m²]	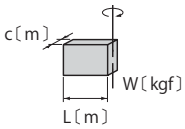	$GD^2=\frac{1}{3}W(4L^2+C^2)$ [kgf·m²]

(2) GD² of the linear motion (GD² in the load side)

General purpose	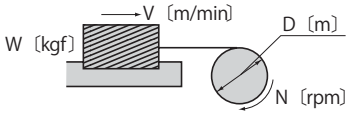	$GD^2=W\left(\frac{V}{\pi/N}\right)^2=WD^2$ [kgf·m²]
Horizontal movement by the conveyor	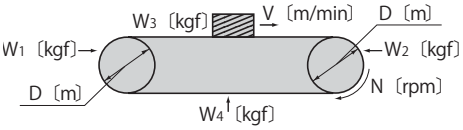	$GD^2=\left(\frac{W_1+W_2}{2}+W_3+W_4\right)\times D^2$ [kgf·m²]
Horizontal movement by the lead screw	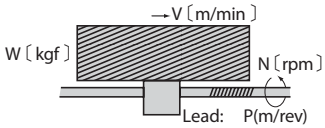	$GD^2=W\left(\frac{V}{\pi/N}\right)^2=W\left(\frac{P}{\pi}\right)^2$ [kgf·m2]
Vertical movement by the hoisting machine	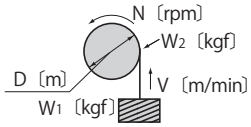	$GD^2=W_1D^2+\frac{1}{2}W_2D^2$ [kgf·m2]

(3) Conversion to the motor shaft (input shaft)

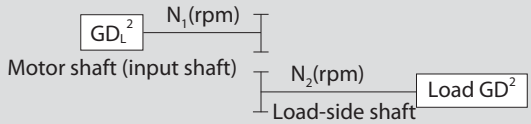

$$GD_L^2=\left(\frac{N_2}{N_1}\right)^2GD^2=\left(\frac{1}{Z}\right)^2GD^2$$

Z: Total reduction ratio

MOTOR SPECIFICATIONS

Moment of inertia / GD² of the Bevel Buddybox Drive H Series

Display the moment of inertia and GD² in the motor shaft of the Bevel Buddybox Drive H Series.

Premium-efficiency, 3-phase Motor

Unit: J_M (Moment of inertia) [×kg·m²]
GD^2_M [×kgf·m²]

kW x P	2.2kW x 4P		3.0kW x 4P		3.7kW x 4P		5.5kW x 4P		7.5kW x 4P		11kW x 4P	
	J_M	GD^2_M	J_M	GD^2_M	J_M	GD^2_M	J_M	GD^2_M	J_M	GD^2_M	J_M	GD^2_M
Without brake	0.00880	0.0352	0.0100	0.0400	0.0194	0.0777	0.0291	0.116	0.0409	0.164	0.0561	0.224
With brake	0.00978	0.0391	0.0110	0.0440	0.0209	0.0835	0.0306	0.122	0.0450	0.180	0.0602	0.241

Premium-efficiency, 3-phase Motor for Inverter

Unit: J_M (Moment of inertia) [×kg·m²]
GD^2_M [×kgf·m²]

kW x P	2.2kW x 4P		3.0kW x 4P		3.7kW x 4P		5.5kW x 4P		7.5kW x 4P		11kW x 4P	
	J_M	GD^2_M	J_M	GD^2_M	J_M	GD^2_M	J_M	GD^2_M	J_M	GD^2_M	J_M	GD^2_M
Without brake	0.00880	0.0352	–	–	0.0194	0.0777	0.0291	0.116	0.0409	0.164	0.0561	0.224
With brake	0.00978	0.0391	–	–	0.0209	0.0835	0.0306	0.122	0.0450	0.180	0.0602	0.241

Notes: 1. The moment of inertia and GD² of the gear part and motor part are included in the values of the table.
2. The values in this table may be changed without notice.

Notes on Protection and Cooling

■ Motor Protection

No.1 Symbol form of protection of humans and solid foreign substances
No. 2 Symbol form of protection against water permeation
} Classified according to combination.

Protection Method of Motors

No.1 Symbol No.1 Form \ No.2 Symbol No.2 Form	0 Non-protected type	2 Drip-proof type	3 Spray-proof type	4 Splash-proof type	5 Water-jet-proof type	6 Sea-wave-proof type	7 Immersion-proof type	8 Submersible type
0 (Non-protected type)	IP00			×	×	×	×	
1 (Semi-protected type)	IP10	IP12S			×	×	×	
2 (Protected type)	IP20	IP22S	IP23S	IP24	×	×		
4 (Totally enclosed type)	×			IP44	IP45			
5 (Dust-proof type)	×			IP54	IP55	IP56		
6 (Complete dust-proof type)					IP65			

Note 1: × mark denotes difficulty in forming the combination.
Note 2: ▭ Outlined columns denote the manufacturing range of Sumitomo.
Note 3: Contact us for motors of JP45 and JP55.

Class of No.1 Symbol

Type	Symbol	Description
Non-protected	0	Constructed without special protection against human contact and penetration of solid foreign substances.
Semi-protected	1	Constructed to prevent inadvertent contact with rotating and conductive parts inside the machine, by hand or other critical parts of human body. Constructed to prevent penetration of solid foreign substances over 50 mm in diameter.
Protected	2	Constructed to prevent contact with rotating and conductive parts inside the machine, by hand or other critical parts of the human body. Constructed to prevent penetration by solid substances over 12mm in diameter.
Totally enclosed	4	Constructed to prevent contact with the rotating and conductive parts inside the machine, by tools, electric wires, etc., with minimum width and thickness over 1mm. Constructed to prevent penetration of solid foreign substances over 1mm diameter. However, water drainage outlet and exhaust outlet may be of Symbol 2 construction.
Dust-proof type	5	Constructed to prevent contact with rotating and conductive parts inside the machine by any form of object. Constructed for maximum protection against dust particles penetration, but will not interfere with normal operation, despite of such penetration.
Complete dust-proof type	6	Constructed for complete protection against dust particles penetration.

Class of No.2 Symbol

Type	Symbol	Description
Non-protected	0	Constructed without special protection against water permeation.
Drip-proof	2	Constructed to prevent harmful effect from dripping water falling from within 15° direction from vertical.
Spray-proof	3	Constructed to prevent harmful effect from dripping water falling from within 60° direction from vertical.
Splash-proof	4	Constructed to prevent harmful effect from dripping water falling from any direction.
Water-jet-proof	5	Constructed to prevent harmful effect from spray from any direction.
Sea-wave-proof	6	Constructed to prevent harmful effect from strong spray from any direction.
Immersion-proof	7	Constructed for submersion into water of prescribed depth and time, but not having any harmful effect in spite of water permeation.
Submersible	8	Constructed to assure normal operations under water.

Example:

IP – 5 4 ☐
SM

- SM → Form of protection against water permeation: Splash-proof type
- 5 → Form of protection against bodily injury and solid foreign substances penetration: Dusth-proof type
- IP → JEC standard abbreviation (IP in case of IEC standards)

S ..... Test of form of protection against water permeation, conducted when motor is stopped
M ..... Test of form of protection against water permeation, conducted when motor is operating
When no S or M stipulated ..... Test conducted when motor stopped and when operating

■ Cooling

Enclosure Construction	IEC Standards
Totally enclosed, non-ventilated (TENV)	IC410
Totally enclosed, fan-cooled (TEFC)	IC411

Compliance of International Standards

International Standards And Compliance Of Sumitomo Products

CCC Standards (China Compulsory Certification)

China had implemented the China Compulsory Certification (CCC) system since May 1, 2002 as becoming the full member of World Trade Organization (WTO). They have moved on to compulsory licensing on August 1, 2003. Motor capacity 1.1kW and below are subject to this certification, and requires CCC Mark for sales in China. Below table is our motor with CCC.

Motor	Single Phase Motor		Three Phase Motor		AF Motor	AF Motor (Foot Mount)
Capacity	15~90W	0.1~0.75W	40~90W	0.1~1.1W	0.1~0.75W	0.4~0.75W
Voltage	220V		220 or 380V			
Frequency	50Hz		50Hz			
Thermal Class	Class E	Class B	Class E	Class F		
Usage	indoor (IP44), Outdoor (IP55)		indoor (IP44), Outdoor (IP55)			

AF motor: 3 Phase Motor for inverter

Difference with standard items
- CCC Mark as in the right is applied on the nameplate.
- Aluminum terminal box is the standard for three phase motor (except indoor specification for 40~90W).
- Terminal block type (6 terminals, European system) is the standard for three phase motor (for 0.1kW or more).
- Rotational direction is the opposite from Japanese domestic specification (in CCW direction looking from the anti-load side).
- CCC correspondence motor coil is used.

China Compulsory Certificate

Remarks

· CCC Mark is necessary when exporting small size motor (or gear motor) units of 1.1kW or below to China.
· Subject service products and spare parts without certification may be permitted for import to China by applying for exemption.
Consult us for any clarification.

GOST-R Standard (Russian Gosstandard)

GOST-R Standard is a national certification system determined by State Committee of Russian Federation for Standardization and Metrology.
Any product distributed in the Russian Federation requires certification. Especially products subject to compulsory certification are not allowed to export to Russian Federation without this certification.
Sumitomo offers motors conforming to GOST-R specification for export to Russia, because motors are subject to compulsory certification.
Our Certified Motor Specification (Range other than the below is the same as CE Marking of Europe.)

Motor	General Motor				Inverter motor (AF Motor)			
	Without Brake	With Brake	Without Brake	With Brake	Without Brake	With Brake	Without Brake	With Brake
Capacity x 4P	0.1~3.7kW	5.5kW	0.1~3.7kW	5.5kW	0.1~2.2kW	3.7kW	0.1~2.2kW	3.7kW
Motor voltage	220/380V	380V	220/380V	380V	220/380V	380V	220/380V	380V
Brake voltage	-	-	220V	380V	-	-	220V	380V
Frequency	50Hz				60Hz			
Thermal class	F				F			
Rating	S 1 (continuous)				S1 (continuous)			
	indoor (IP44), Outdoor (IP55)				indoor (IP44), Outdoor (IP55)			
Starting	Dual voltage inline	⅄－Δ	Dual voltage inline	⅄－Δ	-			

AF motor: 3-Phase Motor for inverter

Difference Compared to Standard Japanese Product
- Nameplate is marked with GOST-R Mark (as shown in the right).
- Standard terminal box is made of Aluminum
- The motor has terminal block (European type with 6 terminals).
- Rotation direction is counterclockwise viewed from fan cover side (opposite from Japanese specification).
- Motor coil is certified for GOST-R.

GOST-R Mark

Cautions

· Uncertified products cannot pass through customs when exported to Russia. (No specific certification is necessary when the unit is exported to Russia as a part of the machine.)
-A verified copy of the certification is necessary when exporting the individual unit for each case (each ship).
Let us know when ordering the units which are not included in an apparatus or not built into the exported aparatus.

Compliance of International Standards

CE MARKING

The CE mark is to be affixed to products that conform to EC directives, in order to certify the quality and safety of products and ensure free distribution of products across borders within the region of the EU (European Union).

EC directives applicable to machine products and implementation period

The following three directives apply to ordinary machine products.

EC directives \ Details	Objects	Details of directive
Machinery directive	Aggregates of parts, which are movable (Industrial machines, primarily)	Essential matters related to safety of machines are stipulated. Machines that are electrically dangerous shall fulfill the requirements for low voltage.
Low Voltage Directive	Products driven by power of 50~1,000 VAC or 75~15,000 VDC	Products not conforming to standards can not be put on the market.
EMC Directives Electromagnetic Compatibility Directive	All types of products that may cause jamming (electromagnetic radiation) or have their functions impeded by nearby radio waves	EMI : Not to cause external electromagnetic interference EMS : To withstand external electromagnetic interference

Standard Specifications of CE Marking Motors

Input power : 15W~90W 200V 50Hz Direct start-up
0.1W~4W 230/400V 50Hz Dual voltage direct starting
5.5W or more 400V 50Hz λ – △start

Insulation : 15W~0.4kW Class E
0.75W or more Class B

Rated time : Continuous

Characteristics : IEC34-1

Protection : P54 (without brake), IP44 (with brake) 15W~90W : Aluminum (M20 bolts(P1.5) × 1pc)

Terminal box : (Material) 5.5kW or less : Aluminum (PG16 bolts × 2pcs or M25 bolts (P1.5) × 2pcs)
7.5kW or more : Cast Iron (PG21 bolts × 2pcs or M32 bolts (P1.5) × 2pcs)

: (Specification) Terminal Plate (six terminals, European style)
with grounding terminal
Conduit tube European size* (PG thread or M thread)
*different from Japanese standard of conduit tube PF thread.
Models of 15W~90W contain M thread and cable ground (applicable lead diameter P6.0~12)

Shaft rotating direction : Rotating direction is reverse to Japanese standard direction.

Insulation : Distances between insulated surfaces and spaces in accordance with IEC standards.

External dimensions : Same as standard except for the terminal box. Length might vary in some cases for models 90W or less.

TÜV test report : Acquired for a representative model 0.75kW×4P, 230V/400V (Oct 1996)
CE marking motors are manufactured in accordance with the model

Declaration of Conformity : Declaration of Conformity is available when necessary for CE marking

Manufacturing range of CE Marking motors

3-phase induction motor

	230/400V dual voltage													
Input power symbol	0.015	0.025	0.04	0.06	0.09	0.1	0.12	0.18	0.2	0.3	0.4	0.5	0.8	1
kW×4P	(0.015)	(0.025)	(0.04)	(0.06)	(0.09)	(0.1)	0.12	0.18	(0.2)	0.25	0.37	(0.4)	0.55	0.75
Frame	F50S	F50M	F50L or F56S	F50L or F56M	F56L	V63S		V63M			V71M		V80S	V80M

	230/400V dual voltage						400V
Input power symbol	1H	2	3	4	5	6	8
kW×4P	1.1	1.5	2.2	3	(3.7)	4	5.5
Frame	V90S	V90L	V100L	V112S	V112M		V132S

· Motors of kWs without brackets ( ) in the above table are standard in Europe while motors of kWs with brackets ( ) are used only in Japan and other countries.
· European standard kW motors are recommended. Motors of kWs with brackets ( ) are also available.
3-phase 200V/50Hz, 200V/60Hz, 220V/60Hz 3-phase 400V/50Hz, 400V/60Hz, 440V/60Hz 3-phase 380V/50Hz, 3P 415V/50Hz
Contact us when motors of kW and voltage not shown in the above table are required.
· Consult us when M bolt (Metric bolt) is needed for conduit tube.

Measures to take for EC directives and CE marking related to gear motors

Among EC directives, the machinery directive (issued in January 1995) concerning induction motors and low voltage directive (issued in January 1997) are applicable.
The EMC directive (issued in January 1996) does not apply to induction motors.

CE marking logo shown on nameplates

CE

Compliance of International Standards

UL Standards (Underwriters Laboratories)

UL Standards are established for safety by a commercial testing institute in the US to prevent harmful effect to human life, fire and disaster based on a series of scientific study, research and experiment. It is not regulated to comply with the standards by Federal Government, but it is regulated by some states or cities. Approved products by UL standards are highly appreciated in the US to represent your reliability.

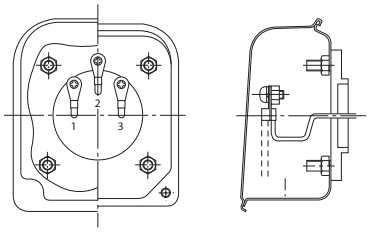

3-Phase indoor terminal box

■ 1. Single-phase motor or motor w/brake is manufactured in the range of 1/50 through 1/9 HP.
■ 2. Outdoor type is available. Please consult us.
■ 3. F-class insulation type is available. Please consult us.
■ 4. For other voltages or frequencies, please consult us.

Differences from Sumitomo standard models

- · Terminal symbol: 1,2,3
- · Name plate with UL mark and measurement in HP
- · Opposite rotating direction
- · Copper terminal box
- · UL standard motor coil and brake coil

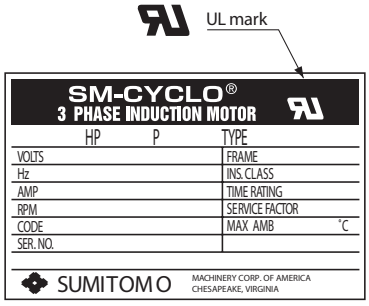

UL nameplate

Remarks

· Manufacturing and repair work may be conducted only at authorized factories.
· Motor for inverter is excluded from UL approval. Sumitomo supplies UL compliant AF motor. (UL mark is not fixed on a nameplate of UL compliant products.)

CSA Standards (Canadian Standard Association)

National standards established by a semi-governmental organization in Canada. Most states in Canada require electronic products to be approved by CSA. CSA is considered equivalent in some states in the US.

Motor	3-phase induction motor	3-phase induction motor with brake	High efficiency 3-phase induction motor ＊1	High efficiency 3-phase induction motor with brake ＊1
Power	1/8~1HP×4P	1/8~1HP×4P	1.5~5HP×4P	1.5~5HP×4P
Voltage	208V, 230V, 460V, 575V		230V, 460V, 575V	
Frequency	60Hz			
Insulation	Class B (and Class F)			
Ambient conditions	Indoor type ＊2			

＊1: Contact us for manufacture of a single-phase motor or a high-efficiency motor with brake. ＊2: Outdoor type not supplied
＊3: Some 1/50 through 1/9HP ¥4P are CUL approved products which are permitted for us in Canada.

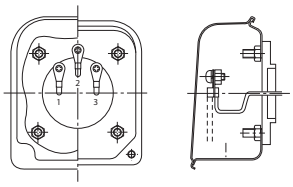

3-Phase indoor terminal box

Differences from Sumitomo standard models

- · Terminal symbol: 1,2,3 (with Brake type, T_1, T_2, T_3)
- · The frame size of a high-efficiency motor is special.
- · Name plate with CSA mark and measurement in HP
- · Opposite rotating direction
- · Copper terminal box
- · CSA standard motor coil

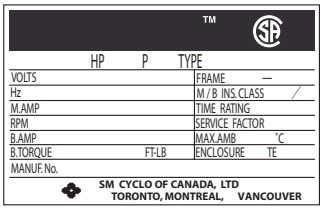

CSA nameplate

Remarks

- If exporting to Canada, it should be CSA approved motor and if above 1HP, high efficiency motor is needed.
- Manufacturing and repair work may be conducted only at authorised factories.
- Motor for inverter is excluded from CSA approval. Sumitomo supplies CSA compliant AF motor (CSA mark is not fixed on a nameplate of CSA compliant products).
  NRCan established the energy efficiency act (EEACT) in 1992 and the energy regulations (EER) in 1995, and additional regulations were applied to gear motors imported on November 27, 1999 or later. Import of gear motors that do not meet the efficiency standards has been banned. This rule applies to the following motors : 1-200HP, IEC frame 90 and larger, 600V or less, constant speed.

Compliance of International Standards

NEMA Standards (National Electrical Manufacturers Association)

Established by a manufacturers' association to provide standards of most electrical products for both manufacturers and consumers.

Differences from Sumitomo standard models

- · Terminal symbol: 1,2,3
- · Name plate marked with NEMA DESIGN and measurement in HP
- · Opposite rotating direction
- · Copper terminal box

NEMA standard motor coil

Remarks

- · No approval is required to state NEMA compliance.
- · NEMA is also applicable for inverter motor, but limited to terminal symbols, measurement in HP, rotating direction and terminal box.

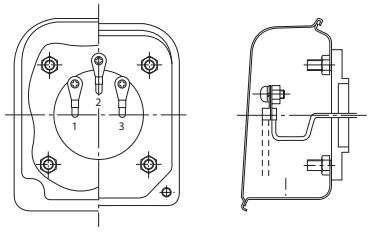

3-Phase indoor terminal box

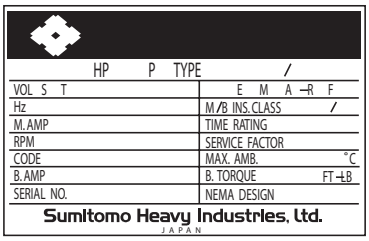

NEMA nameplate

Other standards

Application of International Standards (Example)

●Sumitomo standards
■Manufactured to special specification on customer's request

Country/Standards	Japan · JIS JEM JEC	International·IEC	UK · BS	Germany· VDE DIN
Standard output	●	●	■4kWmax. ●5.5kWmin.	■4kWmax. ●5.5kWmin.
Applicable output frame size	●	—	■	■
Motor mounting dimension of corresponding frame size	●	●	●	●
Shaft end dimension	●	●	■	■
Dimension tolerance of shaft end key and key groove	●	●	■	■
Insulation class	●	●	●	—
Lead wire code	●	●	●	●
Standard direction of rotation	●	■	■	■
Description on nameplate	●	■	■	■
Characteristic testing method	●	●	■	■
Standard voltage	200V · 220V 400V · 440V	■	415V	220V 380V
Standard frequency	50Hz · 60Hz	50Hz · 60Hz	50Hz	50Hz

IEC– International Electrotechnical Commission.
BS–British Standards.

(Note): Dimensions of flanges and shafts are suitable for Sumitomo products only. For other dimensions, consult factory.

Major Japanese Standards

(1) General rotating electrical machines
- JIS C 4004 (1992) : General rules for rotating electrical machines
- JEC-200 (1993) : Rotating machinery in general
- JEM 1188 (1969) : Rated output values of electric motors

(2) General 3-phase induction motors
- JIS C 4210 (1983) : Low-voltage 3-phase squirrel cage induction motors for general purpose
- JIS C 4212 (2000) : High efficiency low-voltage 3-phase squirrel cage induction motors
- JEC-37 (1979) : Induction machines

(3) Methods of testing and calculating characteristics
- JEC-37 (1979) : Induction machines
- JIS C 4207 (1993) : Calculating method of 3-phase induction motors characteristics

(4) Dimensions
- JEM 1400 (1991) : Dimension of low-voltage 3-phase squirrel cage induction motors for general purposes
- JEM 1401 (1991) : Dimensions of flange-mounted low-voltage 3-phase squirrel cage induction motors for general purposes

(5) Explosion-proof construction
- JIS C 0903 (1983) : Electrical apparatus for explosive atmospheres in general industries
- JIS C 0904 (1983) : Test methods on electrical apparatus for explosive gas atmospheres in general industries
- JIS C 0905 (1983) : Supplementary requirements for construction of electrical apparatus for explosive atmosphere in general industries
- Recommended practices for explosion-protected electrical installations in general industries (1979)
- Rules for authorization of explosion-proof construction of electrical machine tools (1981)

(6) Others
- JIS C 4003 (1977) : Classification of materials for insulation of electrical machinery and apparatus
- JEC-147 (1960) : Classification of materials for insulation of electrical machinery and apparatus
- JEM 1313 (1983) : Noise levels for low-voltage 3-phase squirrel-cage induction motors for general purpose

Remarks: JEC Japanese Electrotechnical Committee Standards
JIS Japanese Industrial Standard
JEM Japan Electrical Manufacturers' Association

⚠ SAFETY PRECAUTIONS

- Strictly Observe the safety rules required for the installation site and the equipment used, including the Iindustrial Safety and Health Law, Technical Standard for Electric Facilities, Extension Rules, Plant Explosion guidelines, and Building Standards Law.
- Read the maintenance manual before use. Request one from the distributor or our sales department to send it, if it is not handy. The maintenance manual must reach every end user of the product.
- Select an appropriate product matching the operating environment and your application.
- If you are using the product for any equipment that may cause severe personal injury or severe loss of the facilities when it fails (e.g., transporting or elevating system for personnel), install a protection device on the equipment for the safety purpose.
- In an explosive atmosphere, use an explosion proof motor that has a specification adaptable to use in hazardous locations.
- If the motor is being driven with a 400V Class inverter, install a suppression filter or reactor on the inverter, or use an insulation enhanced motor.
- When a 400V Class standard motor is being inverter driven, a high carrier frequency type (e.g., IGBT) inverter with high input voltage or, for long wiring distance, insulation for surge voltage must be considered. Consult us for details. (The inverter motors are of insulation-enhanced type.)
- Specifically for oil-sensitive applications such as processing and clean room, install an oil pan or other devices to prevent oil or grease leakage, which may occur due to failure or termination of service life.

CAUTIONS ON APPLICATION OF SPECIAL MOTORS

- Explosion proof motor: No increased safety motor can be inverter driven. If you need to inverter drive an explosion proof motor, you have to use a flame-proof motor for combination. Consult us for details.
- Motor with brake: An independent power source for the brake must be provided. This power source must always be connected to the primary of the inverter, and the inverter output must be shut off during actuation of the brake.
  The motor depending on the brake type may rattle in the low-speed area due to running.

Warranty Standard

Warranty Period	The warranty period shall be 18 months from the date of shipment from the factory or 12 months from the start date of operation of the product, whichever is shorter (this shall apply only to new products).
Warranty Condition	In the event that the Product fails during the Warranty Period when it is properly installed and combined with other equipment, maintained as specified in the maintenance manual, and properly operated as specified in the catalog or as otherwise agreed upon, the Seller will provide, at its sole discretion, appropriate repair or replacement of the Product free of charge, except as stipulated in the "Warranty Exclusions" as described below. However, if the Product is combined with other equipment, the Seller shall not indemnify the Buyer from any costs of removal or reinstallation of the Product from or to the appropriate equipment, or other incidental costs (such as construction cost and cost of transportation) related thereto, any lost opportunity, any profit loss or other consequential damages incurred by the Buyer.
Warranty Exclusions	Notwithstanding the above warranty, the following shall be warranty exclusions: 1. Any failure attributable to improper installation of the Product or improper combination with other equipment 2. Any failure that may occur due to the cause that the Product is maintained in an insufficient manner and handled in an incorrect manner (for example, if it is not stored as specified in the storage procedure manual established by the Seller) 3. Any failure attributable to any operation not conforming to the specification, or any other operation conditions or state unknowable to the Seller, or any failure attributable to use of a lubricant other than the Seller-recommended ones 4. Any failure attributable to a problem or special specification of the equipment with which the Buyer combined the Product 5. Any failure attributable to a modification or restructuring made, by the Buyer, to the Product 6. Any failure attributable to a problem of a component or part supplied from or designated by the Buyer 7. Any failure attributable to an earthquake, fire, flood, salt damage, gaseous damage, lightning strike, or any other reasons beyond the control of the Seller 8. Warranty concerning a naturally worn and torn , abraded, or degraded consumable part (such as a bearing or oil seal) that may result after normal use of the Product 9. Any failure that is caused for any of the other reasons not attributable to the responsibilities of the Seller

Notes

Notes

Worldwide Locations

U.S.A
Sumitomo Machinery Corporation of America (SMA)
4200 Holland Blvd. Chesapeake,VA 23323,U.S.A.
TEL (1)757-485-3355 FAX (1)757-485-7490

Canada
SM Cyclo of Canada, Ltd. (SMC)
1453 Cornwall Road,Oakville, Canada ON L6J 7T5
TEL (1)905-469-1050 FAX (1)905-469-1055

Mexico
SM Cyclo de Mexico, S.A. de C.V. (SMME)
Av. Desarrollo 541, Col. Finsa, Guadalupe,
Nuevo León, México, CP67132
TEL (52)81-8144-5130 FAX (52)81-8144-5130

Brazil
Sumitomo Industrias Pesadas do Brasil Ltda. (SHIB)
Rodovia do Acucar (SP-075) Km 26
Itu, Sao Paulo, Brasil
TEL (55)11-4886-1000 FAX (55)11-4886-1000

Chile
SM Cyclo de Chile, Ltda. (SMCH)
San Pablo 3507, Quinta Normal, Santiago, Chile
TEL (56)2-892-7000 FAX (56)2-892-7001

Argentina
SM Cyclo de Argentina S.A. (SMAR)
Ing. Delpini, 2236Area de Promocion el Triangulo,
Partido Malvinas Argentinas Grand Bourg,
Buenos Aires, Argentina B1615KGB
TEL (54)3327-45-4095 FAX (54)3327-45-4099

Guatemala
SM Cyclo de Guatemala Ensambladora, Ltda. (SMGT)
Parque Industrial Unisur, 0 Calle B 19-50 Zona 3,
Bodega D-1 Delta Bárcenas en Villa Nueva, Guatemala
TEL (502)6648-0500 FAX (502)6631-9171

Colombia
SM Cyclo Colombia, S.A.S.
Carrera 11, No.93A-53, Office 203, Bogotá, Colombia
TEL (57)1-3000673

Germany
Sumitomo (SHI) Cyclo Drive Germany GmbH (SCG)
Cyclostraße 92, 85229 Markt Indersdorf, Germany
TEL (49)8136-66-0 FAX (49)8136-5771

Austria
Sumitomo (SHI) Cyclo Drive Germany GmbH (SCG)
SCG Branch Austria Office
Gruentalerstraße 30A, 4020 Linz, Austria
TEL (43)732-330958 FAX (43)732-331978

Belgium
Belgium, Netherlands, Luxemburg
Hansen Industrial Transmissions NV
Leonardo da Vincilaan 1-3
2650 Edegem, Belgium

France
SM-Cyclo France SAS (SMFR)
8 Avenue Christian Doppler, 77700 Serris, France
TEL (33)164171717 FAX (33)164171718

Italy
SM-Cyclo Italy Srl (SMIT)
Via dell' Artigianato 23, 20010 Cornaredo (MI), Italy
TEL (39)293-481101 FAX (39)293-481103

Spain
SM-Cyclo Iberia, S.L.U.
C/Gran Via n° 63 bis
planta primera, oficina 1B
48011 Bilbao - Vizcaya, Spain
TEL (34)944-805389

United Kingdom
SM-Cyclo UK Ltd. (SMUK)
Unit 29, Bergen Way, Sutton Fields Industrial Estate,
Kingston upon Hull, HU7 0YQ, East Yorkshire,
United Kingdom
TEL (44)1482-790340 FAX (44)1482-790321

Turkey
SM Cyclo Turkey Güç Aktarim Sis. Tic. Ltd. Sti. (SMTR)
Büyükdere Çayirbaşı Cd. Dede Yusuf Sk. No:11,
34453 Sariyer Istanbul, Turkey
TEL (90)216-384-4482 FAX (90)216-384-4482

China
Sumitomo (SHI) Cyclo Drive China, Ltd. (SCT)
11F,SMEG Plaza, No.1386 Hongqiao Road,
Changning District, Shanghai, China (P.C.200336)
TEL (86)21-3462-7877 FAX (86)21-3462-7922

Hong Kong
SM-Cyclo of Hong Kong Co.,Ltd. (SMHK)
Rm 1301, CEO Tower, 77 Wing Hong Street,
Cheung Sha Wan, Kowloon, Hong Kong
TEL (852)2460-1881 FAX (852)2460-1882

Korea
Sumitomo (SHI) Cyclo Drive Korea, Ltd. (SCK)
Royal Bldg. 9F Rm.913, 5 Danju-Dong, Chongro-Ku,
Seoul, Korea 110-721
TEL (82)2-730-0151 FAX (82)2-730-0156

Taiwan
Tatung SM-Cyclo Co., Ltd. (TSC)
22 Chungshan N. Road 3rd., Sec. Taipei, Taiwan 104,
R.O.C.
TEL (886)2-2595-7275 FAX (886)2-2595-5594

Singapore
Sumitomo (SHI) Cyclo Drive Asia Pacific Pte. Ltd. (SCA)
15 Kwong Min Road, Singapore 628718
TEL (65)6591-7800 FAX (65)6863-4238

Philippines
Sumitomo (SHI) Cyclo Drive Asia Pacific Pte. Ltd. (SMPH)
C4 & C5 Bldg. Granville Industrial Complex
Governor's Drive, Bo. Bancal,
Carmona, Cavite 4116
Philippines
TEL (63)2-584-4921 FAX (63)2-584-4922
TEL (63)46-430-3591
TEL (63)46-482-0580
TEL (63)46-482-0581

Vietnam
SM-Cyclo (Vietnam) Co., Ltd. (SMVN)
Factory 2B, Lot K1-2-5,Road No.: 2-3-5A,
Le Minh Xuan Industrial Park, Binh Chanh Dist.,
HCMC, Vietnam.
TEL (84)8-37-663-709 FAX (84)8-37-663-710

Malaysia
SM-Cyclo of Malaysia Sdn. Bhd. (SMMA)
No.7C, Jalan Anggerik Mokara 31/56, Kota Kemuning,
Seksyen 31, 40460 Shah Alam, Selangor D.E., Malaysia
TEL (60)3-51210455 FAX (60)3-51210578

Indonesia
PT. SM-Cyclo Indonesia (SMID)
Cikarang Jalan Sungkai Blok F 25 No.09 K,
Delta Silicon III, Lippo Cikarang, Bekasi, Indonesia
TEL (62)21-2961-2100 FAX (62)21-2961-2211

Thailand
SM-Cyclo (Thailand) Co., Ltd. (SMTH)
195 Empire Tower, 21st Fl., Unit 2103-4, South Sathorn Rd.,
Yannawa Sathorn, Bangkok 10120, Thailand
TEL (66)2-670-0998 FAX (66)2-670-0999

Australia
Sumitomo (SHI) Hansen Australia Pty. Ltd. (SHAU)
181 Power Street Glendenning NSW 2761, Australia
TEL (61)2-9208-3000 FAX (61)2-9208-3050

India
Sumi-Cyclo Drive India Pvt. Ltd. (SMIN)
Survey No.130, Hissa No.02, Jeevan Nagar, Off Mumbai-Bangalore bypass, Tathawade, Pune-411 033, India
TEL (91)20-6674-2900 FAX (91)20-6674-2901

Japan
Sumitomo Heavy Industries, Ltd.
ThinkPark Tower, 1-1 Osaki 2-chome, Shinagawa-ku,
Tokyo 141-6025, Japan
TEL (81)3-6737-2511 FAX (81)3-6866-5160

Sumitomo Heavy Industries, Ltd.

Power Transmission & Controls Group
Headquarter ThinkPark Tower, 1-1 Osaki 2-chome, Shinagawa-ku, Tokyo 141-6025, Japan

www.sumitomodrive.com

No. SCA/AP/GM/ IE3.01/2019

Sumitomo (SHI) Cyclo Drive Asia Pacific Pte. Ltd.