Sumitomo Drive Technologies

PARAMAX®

9000 Series
Reducer & Drive Units

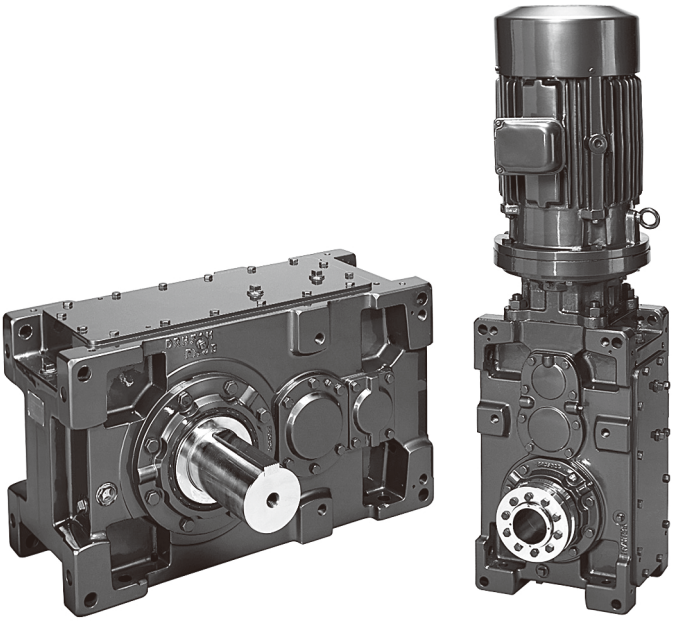

- PARAMAX DRIVE should be handled, installed, and maintained by trained technicians. Carefully read the maintenance manual before use.
- Oil is removed from PARAMAX DRIVE before shipment. Supply oil according to the maintenance manual before operation.
- A copy of this maintenance manual should be sent to the actual user of PARAMAX DRIVE.
- This maintenance manual should be maintained by the user.

Sumitomo Heavy Industries, Ltd. Maintenance Manual No.GM2002E-6

Introduction and Safety

- Read these instructions and all accompanying documents carefully prior to installing, starting, operating, inspecting, and maintaining this equipment in any region worldwide. The equipment must meet all conditions relating to safety as noted in this instruction prior to starting and operating. These instructions must always be kept close to this equipment's operating location or directly with the product.
- These instructions contain specific safety markings. Failure to observe and follow the safety precautions marked in these instructions creates a high risk to equipment or property damage, a high risk to personal safety and/or death.

⚠ DANGER : This symbol indicates safety instructions where non-compliance will involve a high risk to personal safety or loss of life.

⚠ CAUTION : This symbol indicates safety instructions where non-compliance will affect personal safety and can result in the loss of life.

⚠ DANGER

- Transport, installation, plumbing, operation, maintenance, and inspections should be handled by properly trained technicians; otherwise, injury or damage to the machine may result.
- When the unit is to be used in a system for transport of human beings, a secondary safety device should be installed to minimize chances of accidents resulting in injury, death, or damage to the system.
- When the unit is used for an elevator, install a safety device on the elevator side to prevent it from falling. Otherwise, serious injury, death, or damage to the elevator may result.

⚠ CAUTION

- The unit should be operated only within its design and performance specifications; otherwise, injury or damage to a system may occur.
- Keep hands and all foreign objects from the internal moving parts of the unit; otherwise, injury or damage to a system may occur.
- Damaged units should be taken off-line and not used for operation until properly repaired.
- Any modifications or alterations of any kind to the unit will void the warranty and all subsequent claims.
- Do not remove the nameplate.

- Oil is removed from PARAMAX DRIVE before shipment. Supply oil according to the maintenance manual before operation.

● Each page in this manual is identified with an icon in the upper right corner.
Each icon identifies the relevant product type of the information on the page .
For example, each page in this manual will provide information related to: reducers only, drive units only, or common information relating to all units.

• Refer to the brake maintenance manual (Cat. No. MM0202E) for the handling of **drive unit with a brake** .

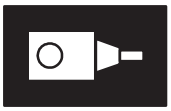

Reducer Only information

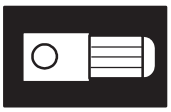

Drive Unit information

COMMON

Common information

CONTENTS

1. Inspection upon delivery 3
2. Storage 6
3. Transport 6
4. Installation 7
5. Coupling with other machines 10
6. Wiring 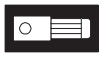 15
7. Operation 19
8. Daily Inspection and Maintenance 20
9. Disassembly / reassembly 28
10. Troubleshooting 29
11. Construction drawing 31
12. Oil quantity 34
13. Oil fill and drain plug locations 35
14. Warranty 36

1. Inspection upon delivery

⚠ CAUTION

- Unpack the unit after verifying that it is positioned right side up; otherwise, injury may result.
- Verify that the unit received is exactly the ordered item. When a different product is installed, injury or damage to the system may result.
- Do not remove nameplate.

Upon delivery of the PARAMAX DRIVE check the following:
(1) The descriptions on the ratng palte conform to your order.
(2) There were no parts damaged during transport.
(3) All bolts and nuts are firmly tightened
If there is any doubt that the unit delivered does not conform to the one ordered, contact the nearest agent, distributor, or service office.

1-1) How to check the nameplate

There are two types of nameplates. Some typical plates are shown below; refer to the proper one.

- When making an inquiry, advise us of ①MODEL ②RATIO ③SERIAL NO.

(1) DRIVE UNIT or REDUCER

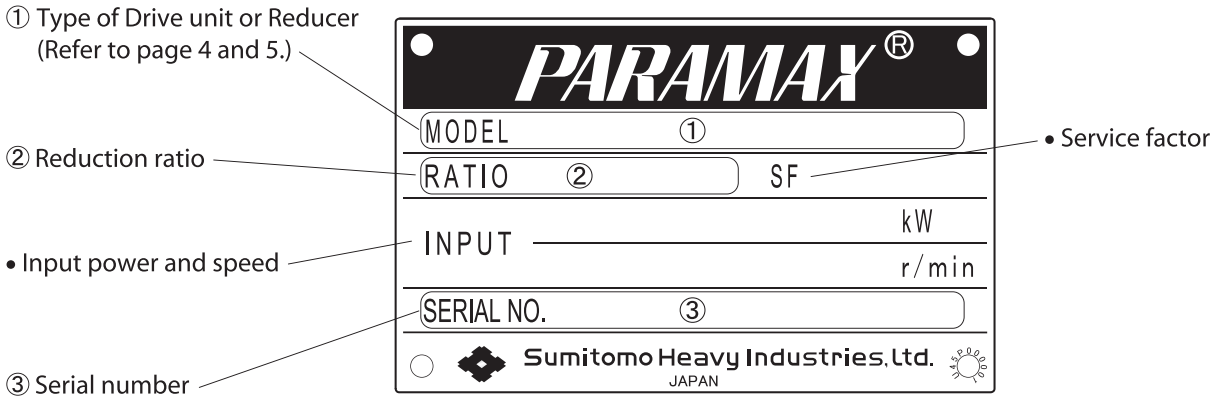

Fig.1 Nameplate of Drive unit or Reducer

(2) Motor

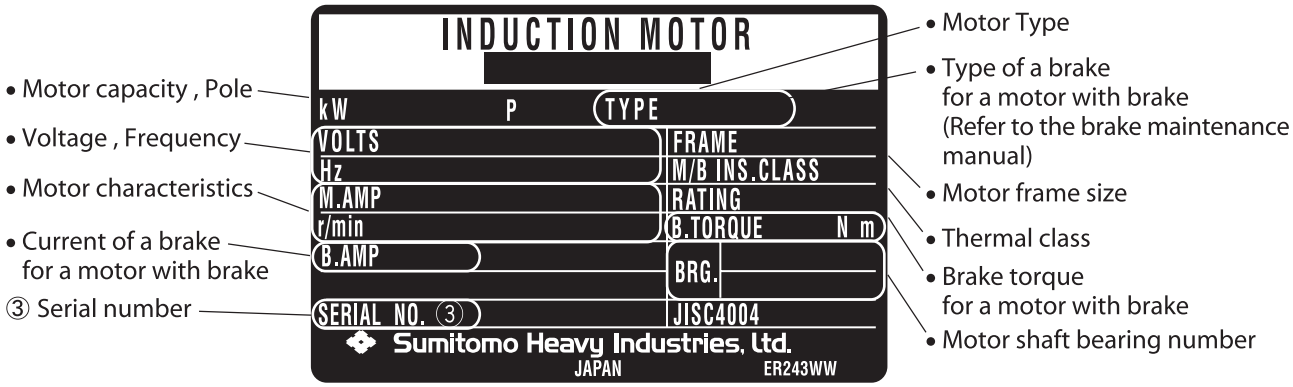

Fig.2 Nameplate of Motor

1-2) Nomenclature

(1) Drive unit or Reducer 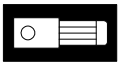 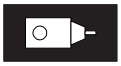

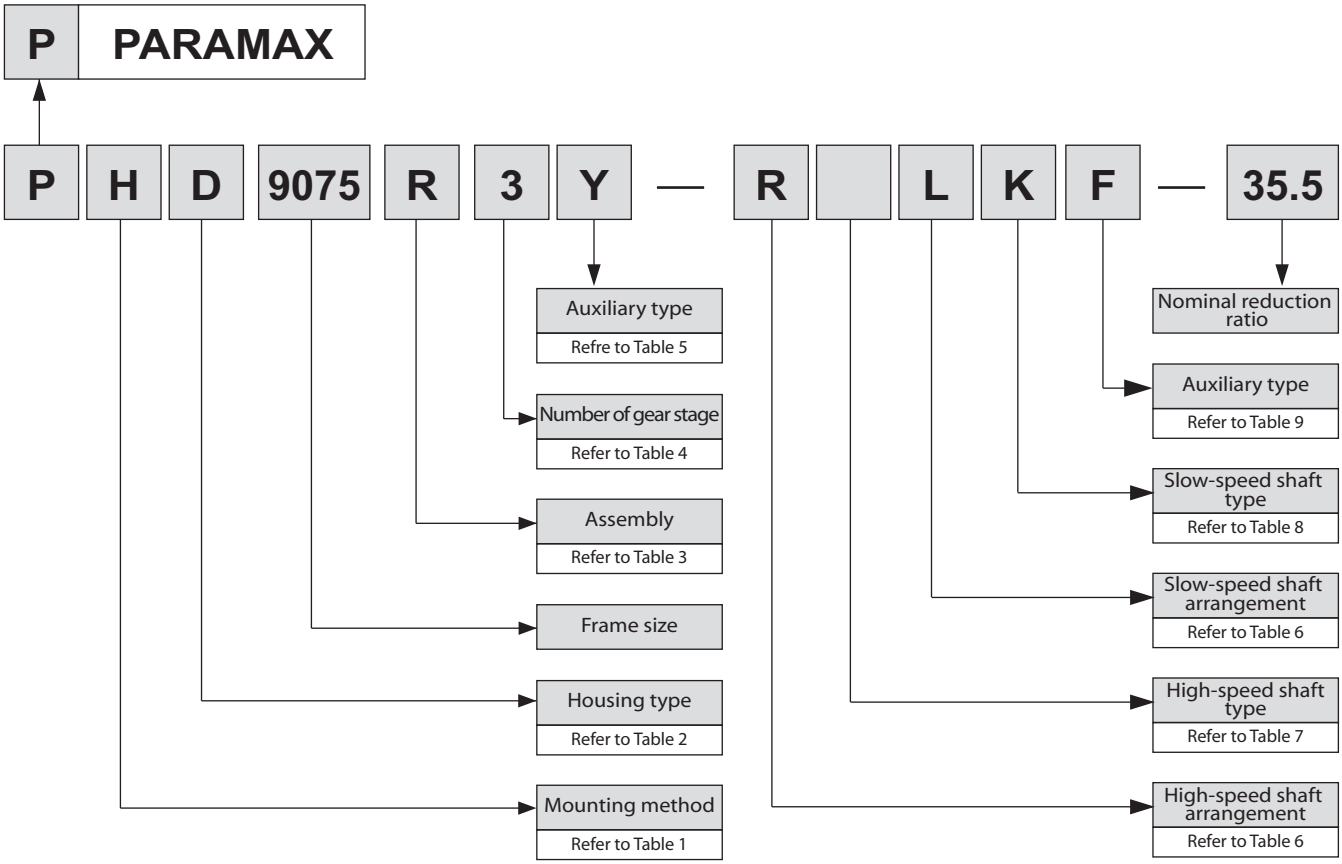

Table 1

Mounting method	
H	Horizontal
V	Vertical
W	Upright
R	Upright Flipped Over

Table 2

Housing type	
A	Mono-block housing
D	Split housing

Table 3

Assembly	
P	Parallel shafts
R	Right-angle shafts

Table 4

Number of gear stages	
1	Single reduction
2	Double reduction
3	Triple reduction
4	Quadruple reduction

Table 5

Auxiliary type	
Y	Inch shaft
A	Steel fabricated housing
YA	Steel fabricated housing + Inch shaft
F	Ductile iron housing
YF	Ductile iron housing + Inch shaft
W	Wall mount

Table 6

Position of projected high/slow speed shaft	
R	Right side viewed from high speed shaft
L	Left side viewed from high speed shaft
B	Both sides
D	Both sides (Reverse gear arrangement of B's)

※ Projected high speed shaft of right angle shaft depends on the position of bevel gear.

Table 7

High speed shaft	
Blank	Solid shaft
M	With motor
Y	Hollow input shaft with flange (right angle shaft only)
J	With high speed adapter

Table 8

Slow speed shaft	
Blank	Solid shaft
K	Hollow output shaft key type
T	Hollow output shaft shrink disc type

Table 9

Auxiliary type	
F	1 Radial fan
G	1 Radial fan (opposite side)
B	Backstop
FB	1 Radial fan + Backstop

(2) Type of motor

Respective codes and motor nomenclature are shown. Please check to see if the type of Paramax Drive or Reducer you have conforms to your order.

- For drive unit **with a servo motor** or **with a vector motor** , refer to the respective motor maintenance manuals.

Motor Nomenclature

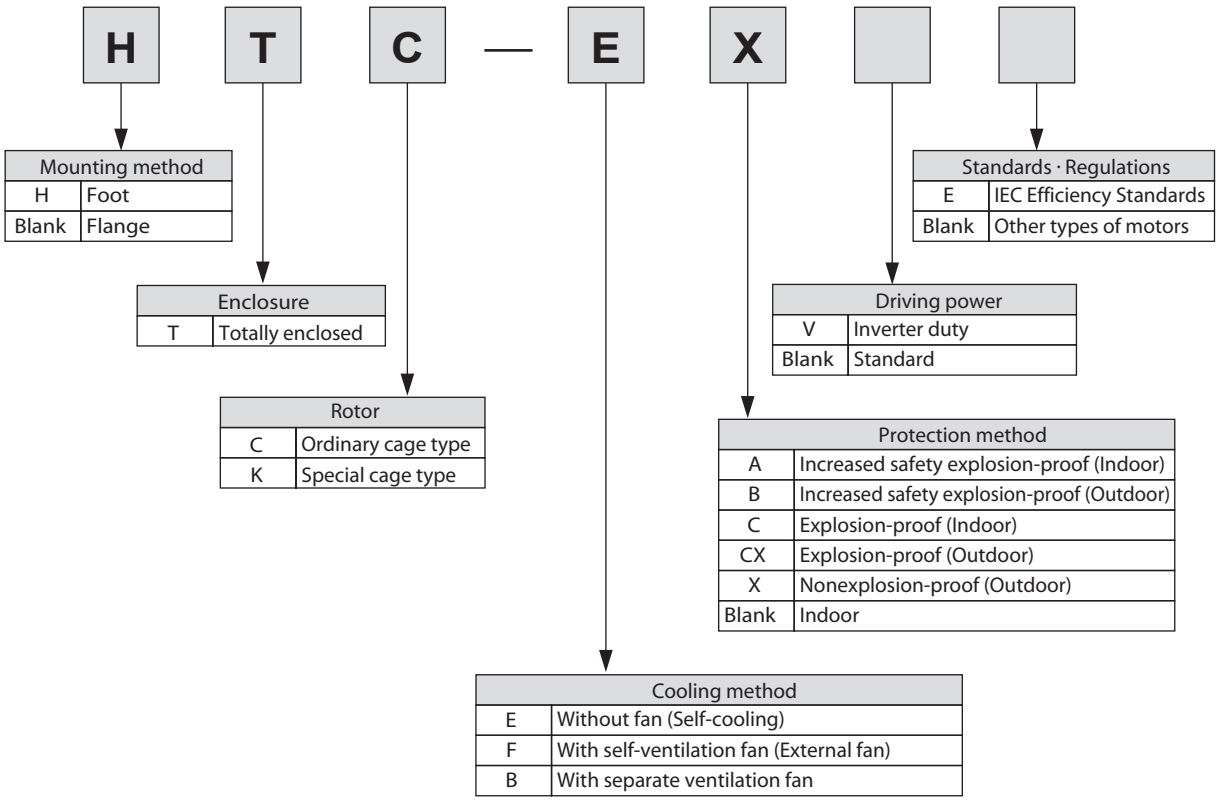

2. Storage

Store PARAMAX DRIVE for extended periods of time in accordance with instructions 2-1, 2-2 and 2-3 below.

2-1) Storage Location

(1) Store PARAMAX DRIVE indoors in a clean, dry, covered storage area.

- Do not store PARAMAX DRIVE outdoors, in humidity, dust, extreme temperature fluctuation, corrosive gas, or similar atmosphere.

2-2) Storage Period

(1) Storage period should be less than 6 months (see table below).
(2) When the storage period exceeds the standard "rust-proofing period," special rust-proofing is necessary. Contact the factory for details.
(3) Export models need export rust prevention. Contact the factory for details.
(4) Standard rust-proofing specification:
1. Outside rust-proofing
Before shipment, rust-proofing treatment is applied. Check the effect of rust-proofing every 6 months, whenever necessary it should be applied.
2. Inside rust-proofing

Rust-proofing period	6 Months
Storage condition	Store inside the shop or warehouse, relatively free of outdoors, in humidity, dust, extreme temperature fluctuation, corrosive gas, or similar atmosphere.

2-3) Use After Storage

(1) Oil seals will deteriorate when exposed to high temperatures and UV rays.
Inspect the oil seals before operation.
(2) After starting the PARAMAX DRIVE, verify that there is no abnormal sound, vibration, or heat rise.
If supplied as a brake motor, check that the brake operates properly. If any problems are observed, contact our nearest agent, distributor, or sales office.

3. Transport

⚠ DANGER

- Do not stand directly under a unit suspended by a crane of other lifting mechanism; possible injury or death may result.

⚠ CAUTION

- Do not to drop the drive unit or reducer. Use the hanging bolt or hole provided. After mounting a drive unit or reducer unit to equipment, do not hoist the entire machine using the hanging bolt or hole; possible personal injury or damage to the equipment and/or lifting device may result.
- Before hoisting, refer to the nameplate, crate, outline drawing, catalog, etc for the weight of drive unit or reducer. Never hoist a unit that exceeds the rating of the crane or other mechanism for lifting; personalinjury or damage to the equipment and/or lifting device may occur.

4. Installation

⚠DANGER

- Do not use a standard unit in an explosive atmosphere; electric shock, personal injury, explosion, fire or damage to the equipment may occur.
- When an explosion-proof type motor is installed, use a motor with specifications compliant with dangerous locations (where an explosive atmosphere of gas or vapor may be generated); otherwise explosion, ignition, electric shock, personal injury, fire, or damage to the equipment may result.
- Install inverters in a location free from explosive gas; electric shock, personal injury, explosion, fire or damage to the equipment may occur.

⚠CAUTION

- Do not use the drive unit or reducer for purposes other than those shown on the rating plate; electric shock, personal injury or damage to the equipment may occur.
- Do not place flammable objects around the drive unit; fire may occur.
- Do not place any object around the drive unit or reducer that will hinder ventilation. Insufficient ventilation can cause excessive heat build-up that may result in burns or fire.
- Do not step on or hang from the drive unit or reducer; injury may occur.
- Do not touch the shaft end of the drive unit or reducer, inside keyways, or the edge of the motor cooling fan with bare hands; injury may occur.
- Install oil pans or other such device to protect products when the unit is used in food processing applications vulnerable to oil contamination. The product and such may be damaged by oil leakage.

4-1) Installation Location

Ambient temperature:	-10℃ to +40℃
Ambient humidity:	85 % max.
Altitude:	1000 m max.
Ambient atmosphere:	There should be no corrosive gas, explosive gas or steam. The location should be well ventilated and dust free.
Installation location:	Indoors, clean and dry location

- Special units are necessary for installation under conditions other than the above.
- Units made for outdoor, explosion-proof, or other specifications can be used under the specified conditions without any problem.
- Install units where inspection, maintenance, and other such operations can be easily carried out.
- Install units on a sufficiently rigid base.

4-2) Installation Angle

Install PARAMAX DRIVE on a level base. (Consult factory for inclined installation)
When the unit is manufactured for inclined installation,
do not install at any angle other than the one specified.
For standard type, the installation angle shall be within limits shown in Fig.3.

- Use installation bolts corresponding to JIS strength class 10.9 or its equivalent.
- Do not remove the eyebolt on the motor. When the eyebolt is removed for any reason, seal the threaded hole or take other water-proofing measures to prevent water from entering the motor.

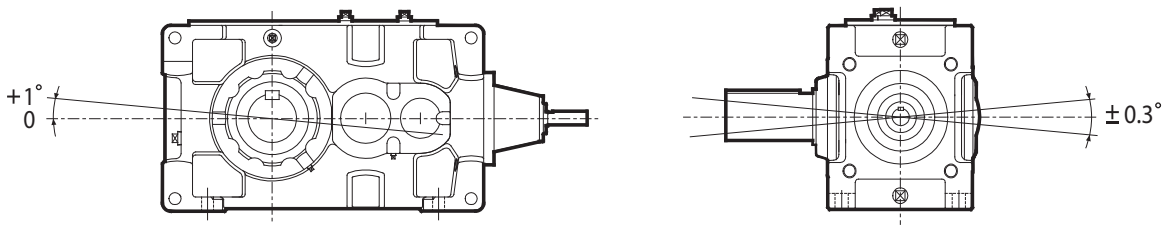

Fig.3 The limits of the installation angle

4-3) Installation method for PARAMAX with fan (Parallel shaft)

⚠ CAUTION

- Be careful for injuries with sharp edges of keyways and parts.
- Keep accessories together to prevent losing during installation.
- Handle parts carefully to prevent damage. Avoid water and dust.

Reducer installation procedure

(1) Remove bolt 1. 2. , and fan hood 3. (Fig.4).
If there is no enough space to tighten the bolt 9. ,
(a) Remove bolt 4. , and fan hood 5. (fig.5).
(b) Remove bolt 6. , and fan rotor 7. (Fig.6).

(2) Install reducer to the installation surface with bolt 9. (fig.7).
If the fan hood 5. and fan rotor 7. are removed,
(c) Install fan rotor 7. to the fan hub 8. with bolt 6. .
(d) Install fan hood 5. to the reducer with bolt 4. (Fig.5).

(3) Install fan hood 3. to the reducer with bolt 1. 2. (Fig.4).
See table 10 for bolt tightening torque of bolt 1. , 2. , 4. , and 6. .

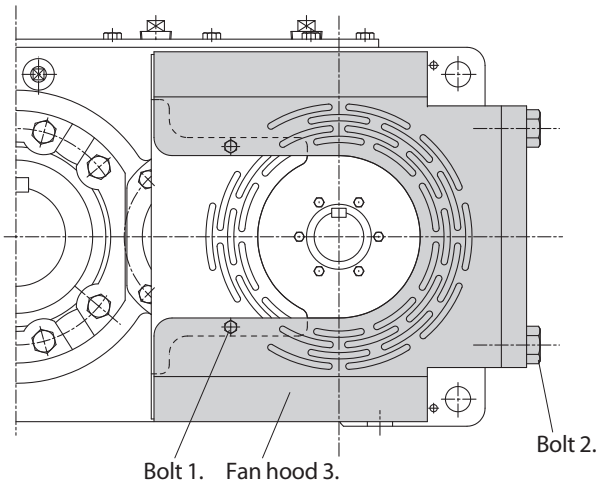

Fig.4

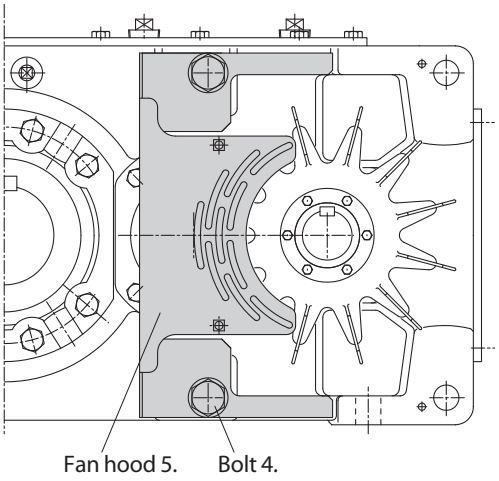

Fig.5

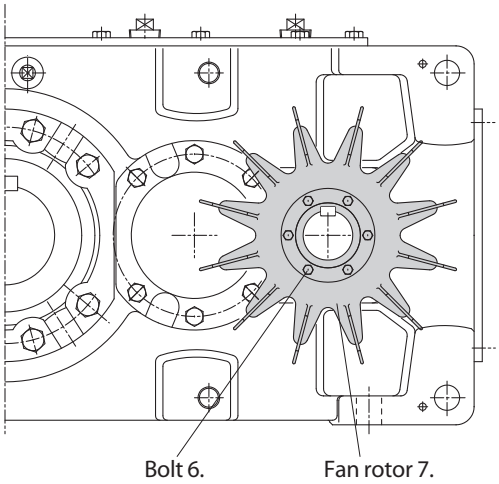

Fig.6

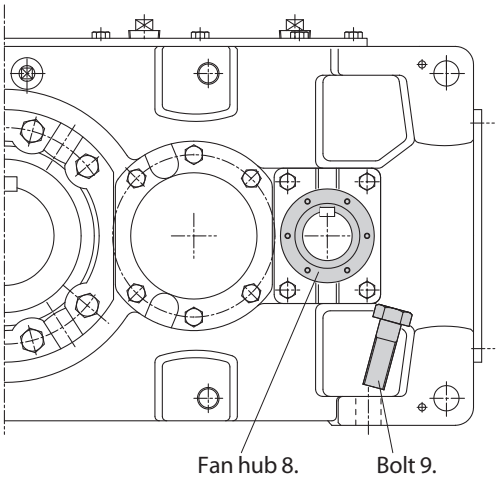

Fig.7

Table 10 Bolt tightening torques

Bolt	Tightening torque N·m	
	Bolt 1. ,2. ,4.	Bolt 6.
M6	—	10.8
M8	11.3	—
M10	39.2	—
M12	97.4	—

Bolt	Tightening torque N·m	
	Bolt 1. ,2. ,4.	Bolt 6.
M20	190	—
M24	328	—
M30	652	—
M36	1140	—

Torque tolerance: ±10%

4-4) Instructions to ensure the cooling air flow

To ensure the air flow from a fan rotor, please follow this instructions.

(1) Ensure the air intake
For PARAMAX DRIVE with a fan rotor, make more than 15mm gap between a fan hood and a screen (ex. safety cover, fluid coupling). See Fig.8,Fig9
Narrow gap makes low air flow rate and the reducer can't be cooled enough.
If the air flow isn't disturbed, for example the safety cover is made by a expanded metal or so, the gap isn't needed.
From a view of Product liability law, avoid too much gap that make touchable hands to the rotational parts.

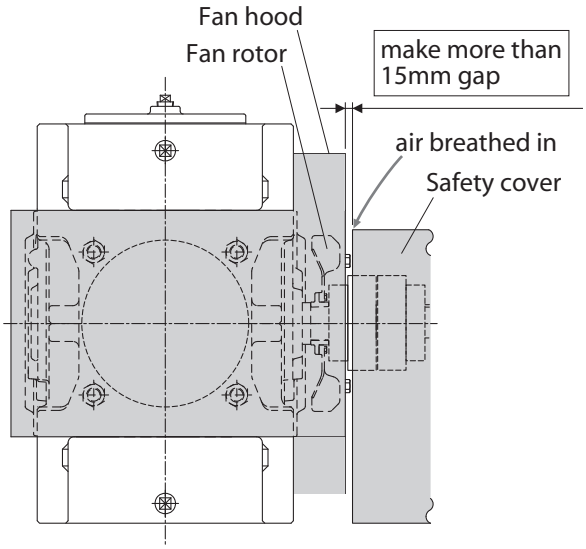

Fig.8 gap between a fan hood and a safty cover

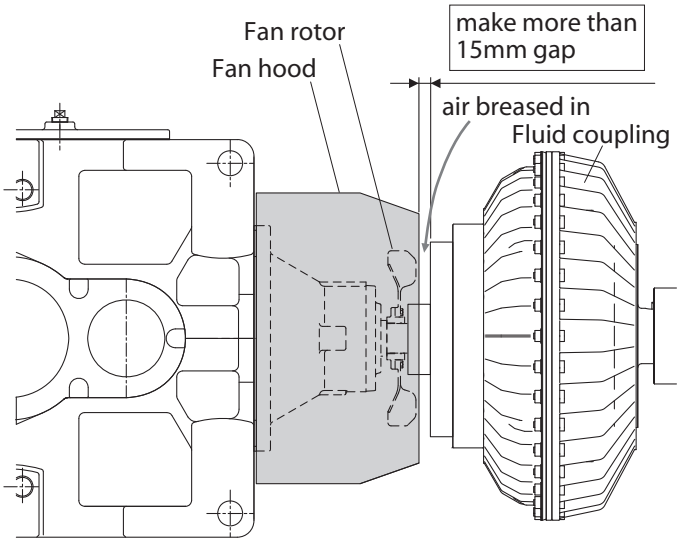

Fig.9 gap between a fan hood and a fluid coupling

(2) Ensure the air flow way
For vertical mount and right angle shaft PARAMAX Drive with a fan rotor, make more than 10mm gap under the reducer. See Fig.10

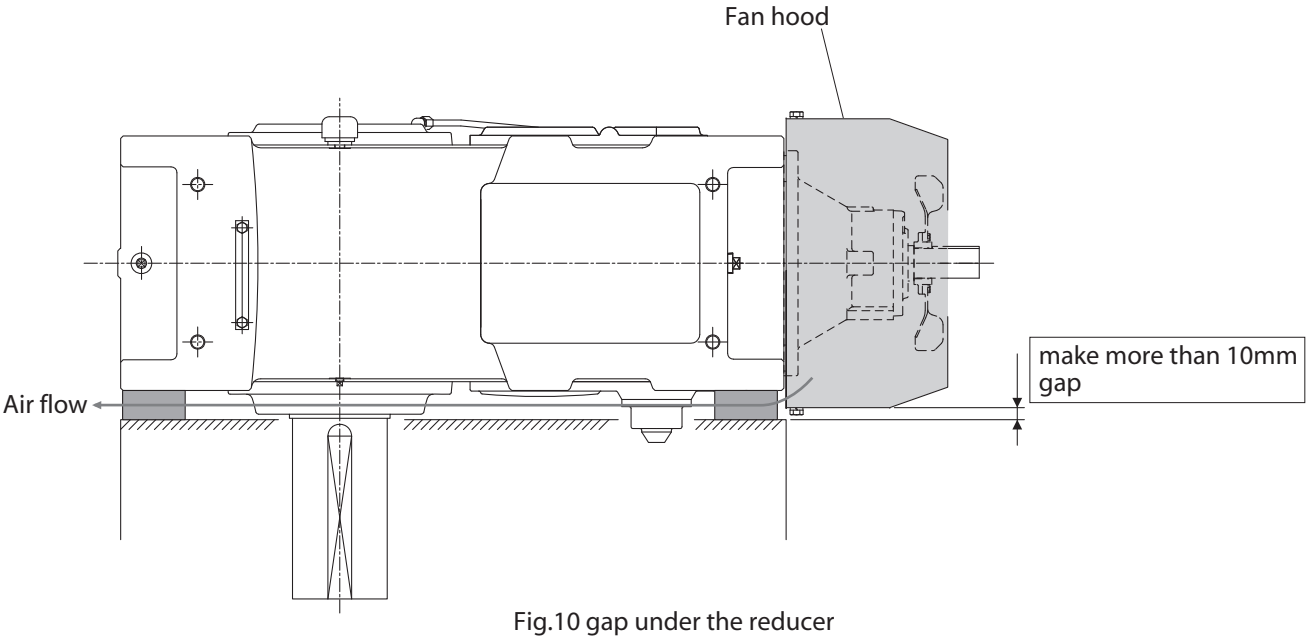

Fig.10 gap under the reducer

5. Coupling with other machines

⚠ CAUTION

- Confirm the direction of rotation before coupling PARAMAX DRIVE with its driven machine. Difference in the direction of rotation may cause injury or damage to the system.
- Remove the key temporarily attached to the output shaft of PARAMAX DRIVE when the shaft is free-rotating (i.e. not loaded); otherwise, injury may occur.
- Install appropriate guard devices around rotating parts; or injury may occur.
- When a belt is used for coupling the unit with another machine, check that the belt tension and the parallelism of the pulley are within the specified limits. When the unit is directly coupled with another machine, check that the direct coupling accuracy is within the specified limits; the system may be damaged, due to misalignment.
- When coupling PARAMAX DRIVE to a load, confirm that the alignment is within the specified limits shown in the maintenance manual, drawings, catalog, etc; damage to the system may occur, due to misalignment.
- Correctly tighten respective bolts to the specified torque shown in the drawing, catalog to prevent damage to the system due to loose components.

5-1) Installation of coupling

- When attaching a coupling, be careful not to apply impact force or excessive thrust to the shaft; otherwise, the bearing may be damaged.
- Shrink fit or shaft-end thread is recommended for mounting (Fig.11).

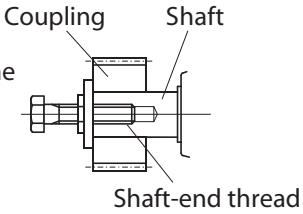

Fig.11

(1) Use of coupling
The dimensions (A,B and X) illustrated in Fig.12 shall be within the tolerance shown in Table 11.

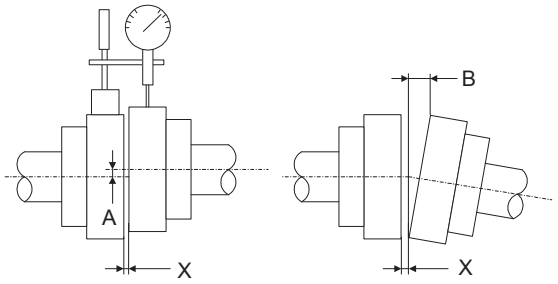

Fig.12

Table 11 Aligning to tolerance for coupling

Tolerance for A dimension	0.05mm
Tolerance for B dimension	0.05mm
X dimension	Specified by coupling manufacturer

(2) Use of chain, sprocket and gear
- The chain tension angle shall be perpendicular to the shaft of PARAMAX DRIVE.
- The pitch circle of the sprocket and gear shall be more than three times of the shaft diameter.
- Locate the sprocket and gear as close to PARAMAX DRIVE as possible so that the point of application of the load will be closer to the PARAMAX DRIVE'S vertical centerline (Fig.13).

(3) Use of V belt
- Excessive V belt tension will damage the output shaft and bearing. The amount must be specified by V belt manufacturer.
- Eccentricity of parallelism between two pulleys shall be less than 20' (Fig.14).
- Use a matched set with identical circumferential length when more than one V belt is used.

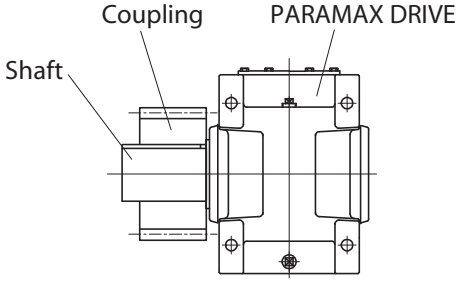

Fig.13

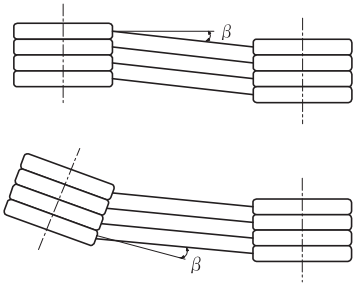

Fig.14

5-2) Hollow shaft

5-2-1) Shrink disc type

The shrink disc has a keyless shrink fit mechanism which shrinks the hollow shaft of a reducer mechanically through the tightening locking bolt, and holds the driven shaft and the hollow shaft as one fixture.

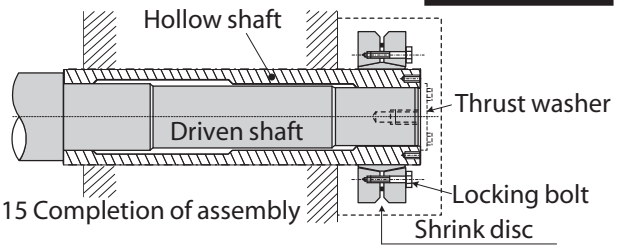

Fig.15 Completion of assembly

Preparation for mounting (Fig.16-1)

(1) Thoroughly degrease contact surface (a), (b), (c), and (d) between the inner diameter of the hollow shaft of the reducer and the outer diameter of the driven shaft.

(2) Make sure that molybdenum disulfide grease has been smeared on the outer diameter (e) of the hollow shaft, the inner diameter (f) of the shrink disc, the locking bolts and the surface (g) that the bolts contact. If the amount is too small, add more.

(3) Smear molybdenum disulfide grease on surface (a) of the outer diameter of the driven shaft. Use "Molykote 321" or equivalent for molybdenum disulfide grease. Do not smear grease on contact surface (b) and (d) between the inner diameter of the hollow shaft and the outer diameter of the driven shaft.

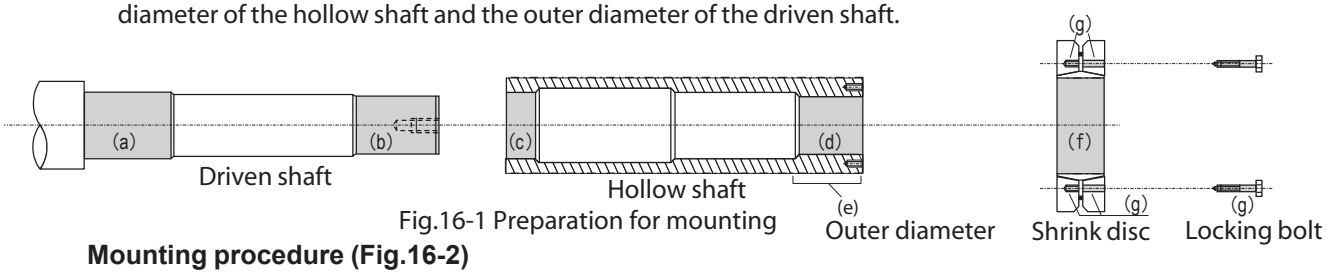

Fig.16-1 Preparation for mounting

Mounting procedure (Fig.16-2)

(1) Insert an O-ring. (Only size 9090 to 9115)

(2) Mount the reducer on the driven shaft and screw nut until faces (h) and (i) make contact.

(3) Set the shrink disc at dimensions LV from the end face of the hollow shaft (Refer to Table 12 on Page 13).

(4) Tighten the locking bolts. Make sure that the surfaces of both plates of the shrink disc are parallel when tightening bolts. A short-handled spanner is suitable for tightening these bolts. After confirming that the shrink disc is set correctly, tighten the bolts with a wrench. Uniformly, tighten the locking bolts clockwise (not diagonally) while keeping both plates parallel. It is recommended to tighten respective bolts by 30 degres each time. Use a torque wrench to check the tightening torque of all the locking bolts.
Finally, make sure that the plates of the shrink disc are parallel.

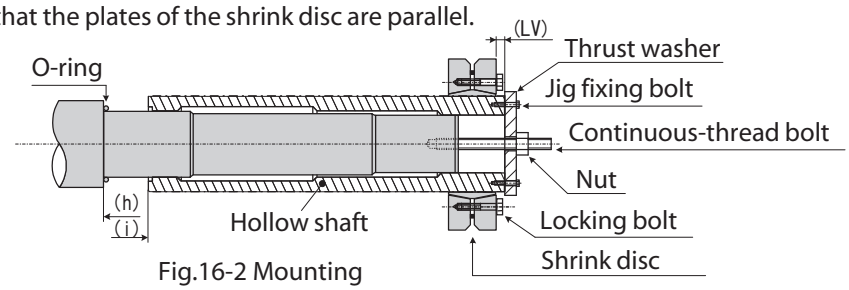

Fig.16-2 Mounting

Note 1. Tighten the locking bolts at the specified torque (Refer to TA: Table 12 on Page 13).

Note 2. For a vertical reducer, mount a thrust washer to prevent the reducer from moving when locking nut is loosened. (Fig.15)

Note 3. A high-tension bolt (JIS strength classification: 10.9 or 12.9) is used as a locking bolt. When replacing it, use one of bolt specified by the manufacturer.

Removal procedure (Fig.17)

(1) Remove by following the above steps in reverse order.
Loosen the locking bolts a little each time so that the plates of the shrink disc do not tilt. If both plates tilt, do not remove the locking bolts. The both plates may suddenly fly out of the reducer and cause injury.
In such a situation, loosen all of the locking bolts a little and insert a wedge (prepared by customer) into both plates so that they become parallel.

(2) Set a thrust washer and hexagon head bolt. Remove the reducer from the driven shaft using adjust bolt.

(Note) The mounting/removal jig (parts with * in section A of Fig.17) is optional. Order them as necessary.

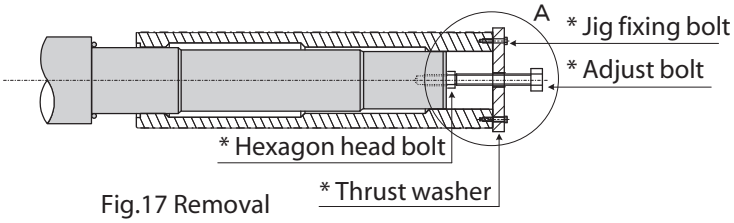

Fig.17 Removal

5-2-2) Key way connection

Size 9015 to 9055

Mounting procedure (Fig.18)

The Hollow shaft bore is provided with retaining ring (d). Ring (d) is the essential component for mounting, securing, and removing the unit.

(1) Smear surface of the shaft (e) with "molykote 321" or its equivalent.

(2) Turn nut (b) and slide the reducer over the driven shaft. Use plain washer (c) if they are necessary.

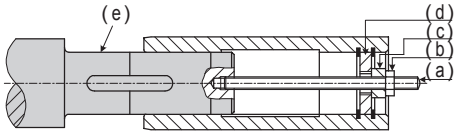

Fig.18

Securing (Fig.19)

(1) After mounting the reducer on the driven shaft, fix bolt (f). (Bolt (f) is not supplied with the unit.)

(2) The bore should be protected by cover (g).

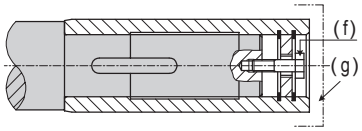

Fig.19

Removal procedure (Fig.20)

(1) Remove ring (d), mount bolt (n), and reset ring (d). Attach bolt (J) to ring (d), and turn bolt (J) to disconnect the hollow shaft from the driven shaft. Screw size, refer to the (Z) listed in Table 13 on page 14.

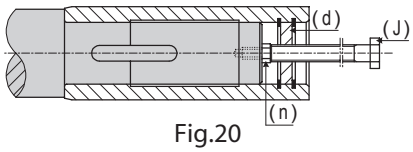

Fig.20

Special cases (Fig.21)

(1) If the driven shaft has no shoulder when mounting, provide a distance ring (h) for fixing in place. (Ring (h) is not supplied with the unit.) Distance ring dimension, refer to Table 13 on page 14.

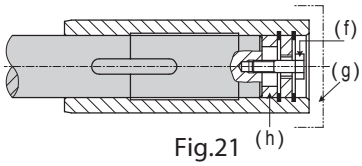

Fig.21

Size 9060 to 9085

Mounting procedure (Fig.22)

The Hollow shaft end is provided with thrust washer (d). Thrust washer (d) is the essential component for mounting, securing, and removing the unit.

(1) Smear surface of the shaft (e) with "molykote 321" or its equivalent.

(2) Turn nut (b) and slide the reducer over the driven shaft.

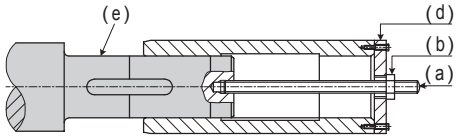

Fig.22

Securing (Fig.23)

(1) After mounting the reducer on the driven shaft, fix bolt (f). (Bolt (f) is not supplied with the unit.)

(2) The bore should be protected by cover (g).

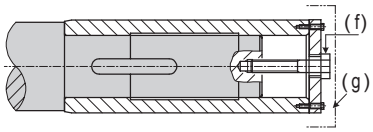

Fig.23

Removal procedure (Fig.24)

(1) Remove thrust washer (d), mount bolt (n), and reset thrust washer (d). Attach bolt (J) to thrust washer (d), and turn bolt (J) to disconnect the hollow shaft from the driven shaft. Screw size, refer to the (Z) listed in Table 13 on page 14.

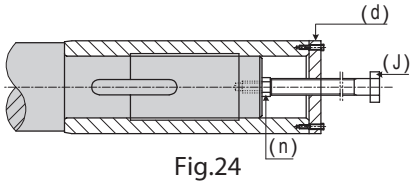

Fig.24

Special cases (Fig.25)

(1) If the driven shaft has no shoulder when mounting, provide a distance ring (h) for fixing in place. (Ring (h) is not supplied with the unit.) Distance ring dimension, refer to Table 13 on page 14.

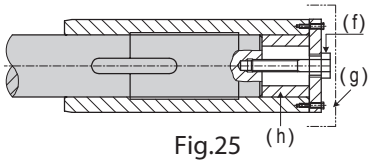

Fig.25

Note: Parts (a), (b), (c), (n), and (J) are optional. Order them as necessary.

5-2-3) Torque arm

(The torque arm is optional.)

The hollow shaft reducer is fixed by the torque arm to prevent the reducer from revolving by an opposite reaction force.
Fig.26 shows the construction of a standard torque arm. Select a torque arm support with proper construction and strength, taking into consideration the reaction force of the reducer and the impact load.

Note 1. The number of disc springs (S) differs according to the size of the reducer.

Note 2. Use bolt (T) and nut (M) classified as JIS strength class 8.8.

Note 3. Adjust Nut (M1) to remove any clearance in the assembly. Lock in position using locking Nut (M2)

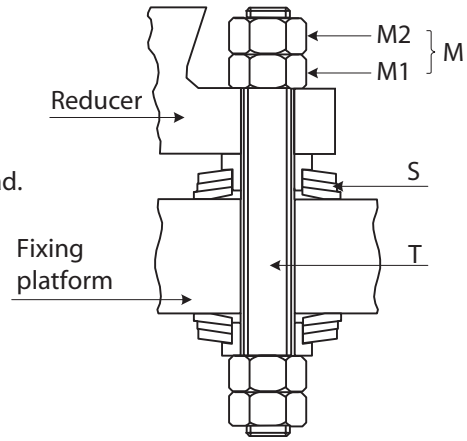

Fig.26 Standard torque arm

5-2-4) Hollow shaft dimensions (shrink disc type)

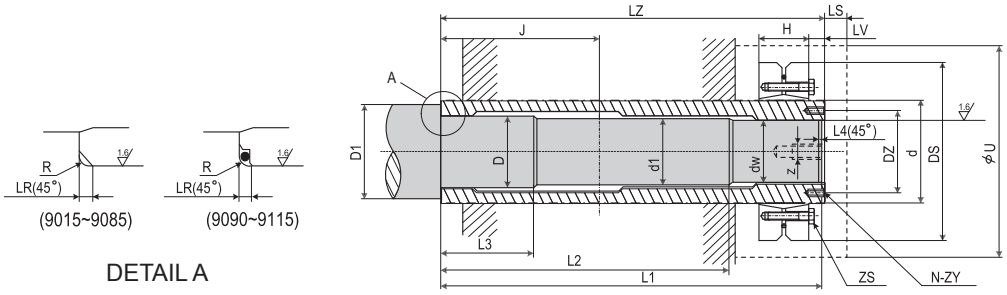

Fig.27

Table 12 Hollow shaft dimensions

Unit: mm

Size	Shrink disc				Tightening bolt		Hollow shaft								Driven shaft									
	MODEL (Note 1)	d	Ds	H	ZS	TA N·m	J	LZ	LR	LV	N-ZY	DZ	LS	U	dw	d1	D h7	D1 min	L1	L2	L3	L4	R	Z (Thread depth)
9015	TAS3091.4-080	80	145	38	M8	35	135	328	3	14	4 - M6	70	15	159	60h6	61	63	78	325	240	80	3	2.5	M20 (30)
9025	TAS3081. -090	90	155	39	M8	35	145	358	3	14	4 - M6	80	17	174	70h6	71	73	88	355	270	80	3	2.5	M20 (30)
9030	TAS3091.1-100	100	170	54	M10	59	160	393	3	14	4 - M6	90	20	207	80h6	81	83	98	390	295	90	3	2.5	M20 (30)
9035	TAS3093. -110	110	185	60	M10	70	160	403	3	14	4 - M6	97	20	237	85h6	86	88	103	400	295	90	3	2.5	M24 (35)
9040	TAS3081. -125	125	215	54	M10	70	180	448	3	20	4 - M8	110	17	237	95h6	96	98	113	445	335	110	3	2.5	M24 (35)
9045	TAS3093. -140	140	230	74	M12	120	180	463	3	20	4 - M10	124	17	277	105h6	106	108	123	460	355	110	3	2.5	M24 (35)
9050	TAS3093. -140	140	230	74	M12	120	200	503	3	22	4 - M10	124	17	277	105h6	106	108	123	500	380	110	3	2.5	M24 (35)
9055	TAS3091. -165	165	290	88	M16	250	205	528	3	27	4 - M12	146	17	307	120h6	121	123	138	525	385	120	3	2.5	M24 (35)
9060	TAS3091. -165	165	290	88	M16	250	230	583	4.5	27	4 - M12	146	17	319	125h6	126	128	143	580	435	130	3	3	M24 (35)
9065	TAS3091. -175	175	300	88	M16	250	235	594	4.5	26	4 - M12	157.5	21	349	140h6	141	143	158	589	450	130	5	3	M30 (45)
9070	TAS3081. -185	185	330	86	M16	290	260	644	4.5	26	4 - M12	167	21	349	145h6	146	148	163	640	475	160	5	3	M30 (45)
9075	TAS3081. -200	200	350	86	M16	290	265	651	4.5	26	4 - M12	177	21	379	155h6	156	158	173	646	475	160	5	3	M30 (45)
9080	TAS3081. -220	220	370	104	M16	290	285	714	4.5	26	4 - M12	195	21	399	170g6	171	173	192	709	520	190	5	3	M30 (45)
9085	TAS3081. -240	240	405	109	M20	570	285	714	4.5	27	4 - M12	210	21	429	180g6	181	183	198	709	520	190	5	3	M30 (45)
9090	TAS3081. -240	240	405	109	M20	570	350	844	6	27	6 - M12	215	21	451	190g6	191	193	212	840	635	200	5	4.5	M36 (55)
9095	TAS3081.1-260	260	440	120	M20	535	350	859	6	27	6 - M12	230	14	450	200g6	201	203	222	855	640	205	5	4.5	M36 (55)
9100	TAS3081.1-260	260	440	120	M20	535	390	934	6	27	6 - M12	235	21	491	210g6	211	213	234	930	705	215	5	4.5	M36 (55)
9105	TAS3081.1-280	280	460	134	M20	535	390	949	6	27	6 - M12	250	19	480	220g6	221	223	244	945	715	225	5	4.5	M36 (55)
9110	TAS3081.1-300	300	485	142	M20	535	420	1030	6	32	6 - M16	270	15	551	240g6	241	243	263	1025	770	245	5	4.5	M36 (55)
9115	TAS3091. -320	320	520	184	M20	490	420	1065	6	32	6 - M16	285	15	550	250g6	251	253	273	1060	785	245	5	4.5	M36 (55)

Note 1. Shrink disc (manufactured by SCHÄFER) type code.
Note 2. Mount a thrust washer on a vertical reducer to prevent the reducer from moving when locking bolt (ZS) is loosened. (Fig.15)

5-2-5) Hollow shaft dimensions (key type)

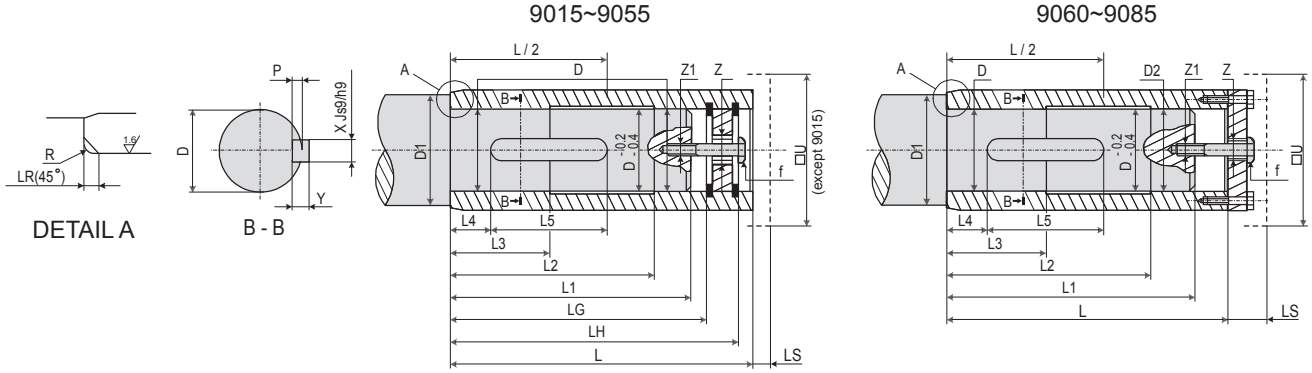

Fig.28

Table 13 Hollow shaft dimensions (key type)

Unit: mm

Size	Hollow shaft					Safety cover		Driven shaft													Locking screw (f) Thread size Body length	Locking distance ring (h) Outer diameter Width
	L	LG	LH	LR	Z	LS	U	D j6	D1 min	D2 j6	L1	L2	L3	L4	L5 min	X	Y	P	R	Z1 (Thread depth)		
9015	270	240	258	3	M24	7.5	ϕ161	55	70		235	200	70	30	115	16	10	6	2.5	M20(30)	M20×50	ϕ55×5
9025	300	265	286	3	M24	10	190	65	80		260	220	80	35	125	18	11	7	2.5	M20(30)	M20×50	ϕ65×5
9030	330	290	314	3	M24	9.5	230	75	90		285	240	90	35	145	22	14	9	2.5	M20(30)	M20×55	ϕ75×5
9035	330	290	315	3	M24	10	260	85	100		285	240	90	35	160	22	14	9	2.5	M20(30)	M20×55	ϕ85×5
9040	360	314	340	3	M30	10	260	90	105		310	260	100	40	180	25	14	9	2.5	M24(35)	M24×60	ϕ90×4
9045	370	316	348	3	M30	10	300	105	120		310	260	100	40	180	28	16	10	2.5	M24(35)	M24×65	ϕ105×6
9050	410	356	388	3	M30	10	300	105	120		350	300	110	45	220	28	16	10	2.5	M24(35)	M24×65	ϕ105×6
9055	410	356	388	3	M30	10	330	115	130		350	300	110	45	220	32	18	11	2.5	M24(35)	M24×65	ϕ115×6
9060	470			4.5	M30	47	340	125	140	123	445	395	90	5	260	32	18	11	3	M24(35)	M24×80	ϕ125×25
9065	480			4.5	M36	54	350	145	160	143	455	405	100	5	265	36	20	12	3	M30(45)	M30×90	ϕ145×25
9070	530			4.5	M36	54	370	145	160	143	500	445	120	5	310	36	20	12	3	M30(45)	M30×100	ϕ145×30
9075	530			4.5	M36	54	400	150	165	148	500	445	120	5	365	40	22	13	3	M30(45)	M30×100	ϕ150×30
9080	570			4.5	M36	54	400	165	180	163	540	480	125	5	370	40	22	13	3	M30(45)	M30×100	ϕ165×30
9085	570			4.5	M36	54	450	175	190	173	540	480	125	5	385	45	25	15	3	M30(45)	M30×100	ϕ175×30

Note 1. The key and keyway conform to JIS B 1301-1996 (ISO) " Sunk keys and keyways parallel keys (regular class)".
Note 2. The fixing bolt and distance ring are customer supplied.
Note 3. Dimension from center of housing to shaft and is L/2.

6. Wiring

- Following instractions apply when using **SUMITOMO standard 3-phase motor**.
  Refer to the relevant instruction manual when using **motors with brake**, **servomotors** and **motors made by other companies**.

⚠ DANGER

- Do not handle the unit when electric power is applied. Be sure to turn off the power; electric shock may occur.
- Connect a power cable to the unit according to the diagram shown inside the terminal box or in the maintenance manual; otherwise, electric shock or fire may occur.
- Do not forcibly bend, pull, or clamp the power cable and lead wires; electric shock or fire may occur.
- Correctly install the grounding bolts; otherwise, electric shock may occur.
- The lead-in condition of an **explosion-proof type motor** shall conform to the facility's electrical codes, extension regulations and explosion-proofing guide, as well as the maintenance manual; otherwise, electric shock, personal injury, explosion, fire, or damage to the equipment may occur.

⚠ CAUTION

- When wiring, follow the facility's electrical codes and extension regulations; otherwise, burning, electric shock, injury or fire may occur.
- The motor is not equipped with a protective device. However, it is required install an overload protector according to facility electrical codes. It is recommended to install other protective devices (earth leakage breaker, etc.), in addition to an overload protector, in order to prevent burning, electric shock, injury, and fire.
- Never touch the terminals when measuring insulation resistance; otherwise electric shock may occur.
- **When using a star-delta starter**, select one with an electromagnetic switch on the primary side (3-contact type); otherwise, fire may occur.
- When using **400V-class inverter** to drive the motor, mount a suppressor filter or reactor on the inverter side or provide reinforced insulation on the motor side; otherwise, dielectric breakdown may cause fire or damage to the equipment.
- **When driving an explosion-proof type motor with an inverter**, use one inverter for one motor. Use the approved inverter for the motor.
- When measuring the insulation resistance of an **explosion-proof type motor**, confirm that there is no gas, steam of other explosive substance in the vicinity, in order to prevent possible explosion or ignition.

- Long cables cause excessive voltage to drop, select cables with appropriate diameter so that the voltage drop will be less than 2%.
- After wiring **outdoor and explosion-proof type motors**, check that terminal box mounting bolts are not loose, and correctly attach the terminal box cover.

6-1) Measurement of insulation resistance

- When measuring the insulation resistance, disconnect the motor from the control panel.

Measure the insulation resistance before connecting to power source. The insulation resistance (R) varies according to the motor output, voltage, type of insulation, coil temperature, humidity, dirt, period of operation, test duration, etc. Insulation resistance should exceed the values shown in Table 14 in most cases.

Table 14 Insulation resistance

Motor voltage	Megohmmeter voltage	Insulation resistance (R)
Low-voltage motor of 600V or less	500V	1MΩ or more
High-voltage motor of 3000V or more	1000V	5MΩ or more

Reference: The following equations are shown in JEC - 2100.

$$R \geqq \frac{\text{Rated Voltage (V)}}{\text{Rated Output (kW)} + 1000} \quad (\text{M}\Omega)$$

$$R \geqq \frac{\text{Rated Voltage (V)} + \text{Speed (r/min)}/3}{\text{Rated Output (kW)} + 2000} + 0.5 \ (\text{M}\Omega)$$

A drop in insulation resistance may be attributed to poor insulation. In that case, do not turn on the power. Contact our nearest agent, distributor, or sales office.

6-2) Protection coordination

(1) Use a molded case circuit breaker for circuit protection.
(2) Use an overload protection device that protects the unit when an electric current exceeding that shown on the rating plate flows.
(3) Use an overload protector which protects the unit within the rated locked time by allowable locked rotor current indicated in the nameplate for **explosion-proof type motors**.

6-3) Motor Connection

Shows the motor connection and the standard specifications for terminal codes.

Fig.29 3-phase motor, 3-phase high efficiency motor (without brake, 200/400V 50/60Hz, 220/440V 60Hz)

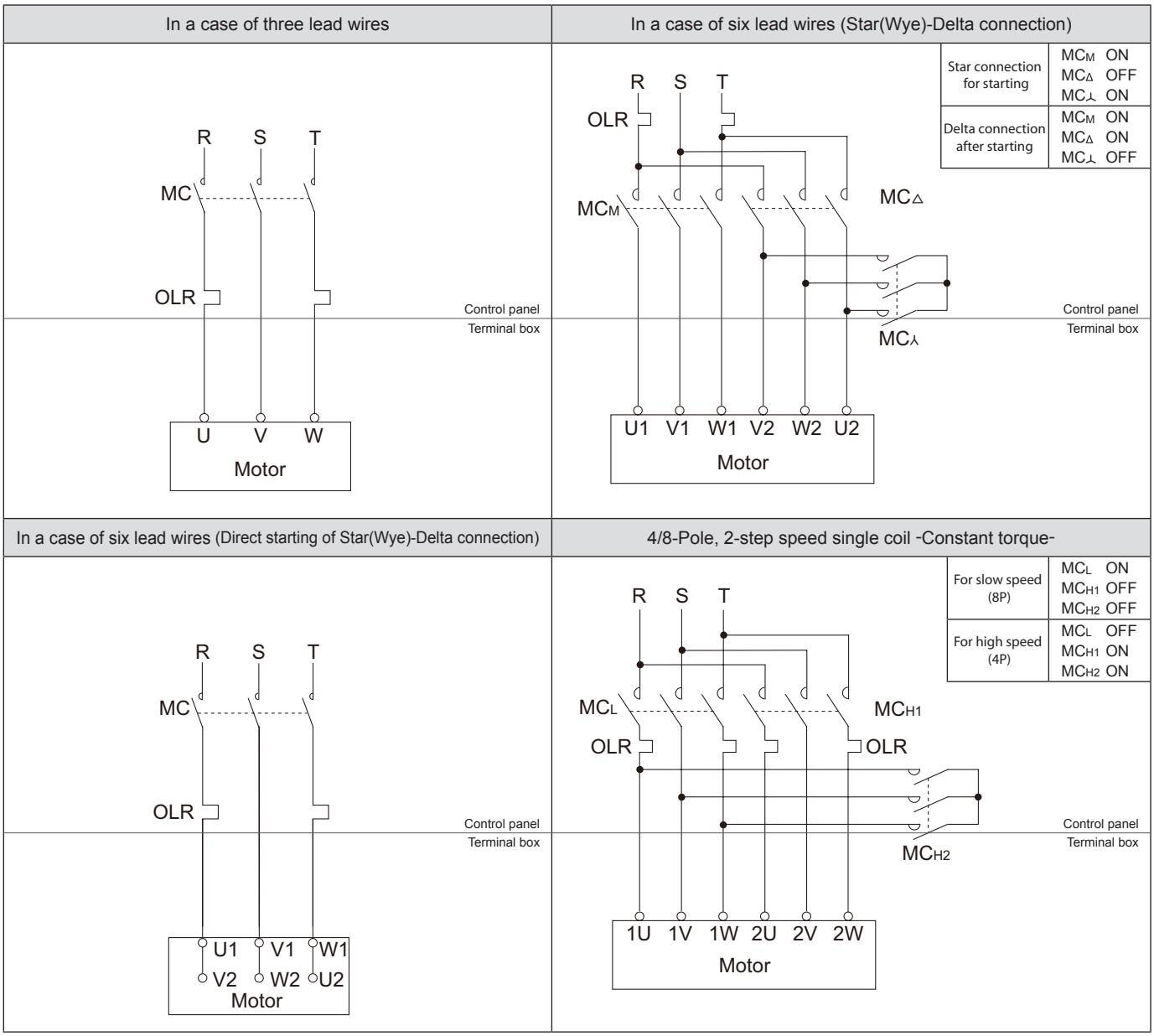

Note : This drawing shows for a motor based on standard specification for domestic market.
Motor based on overseas standard shall be referred to us.

MC: Electromagnetic contactor
OLR: Overload protection device
These should be supplied by the customer.

6-4)

Fig.30 For inverter driven (without brake, 200/220/400/440V 60Hz)

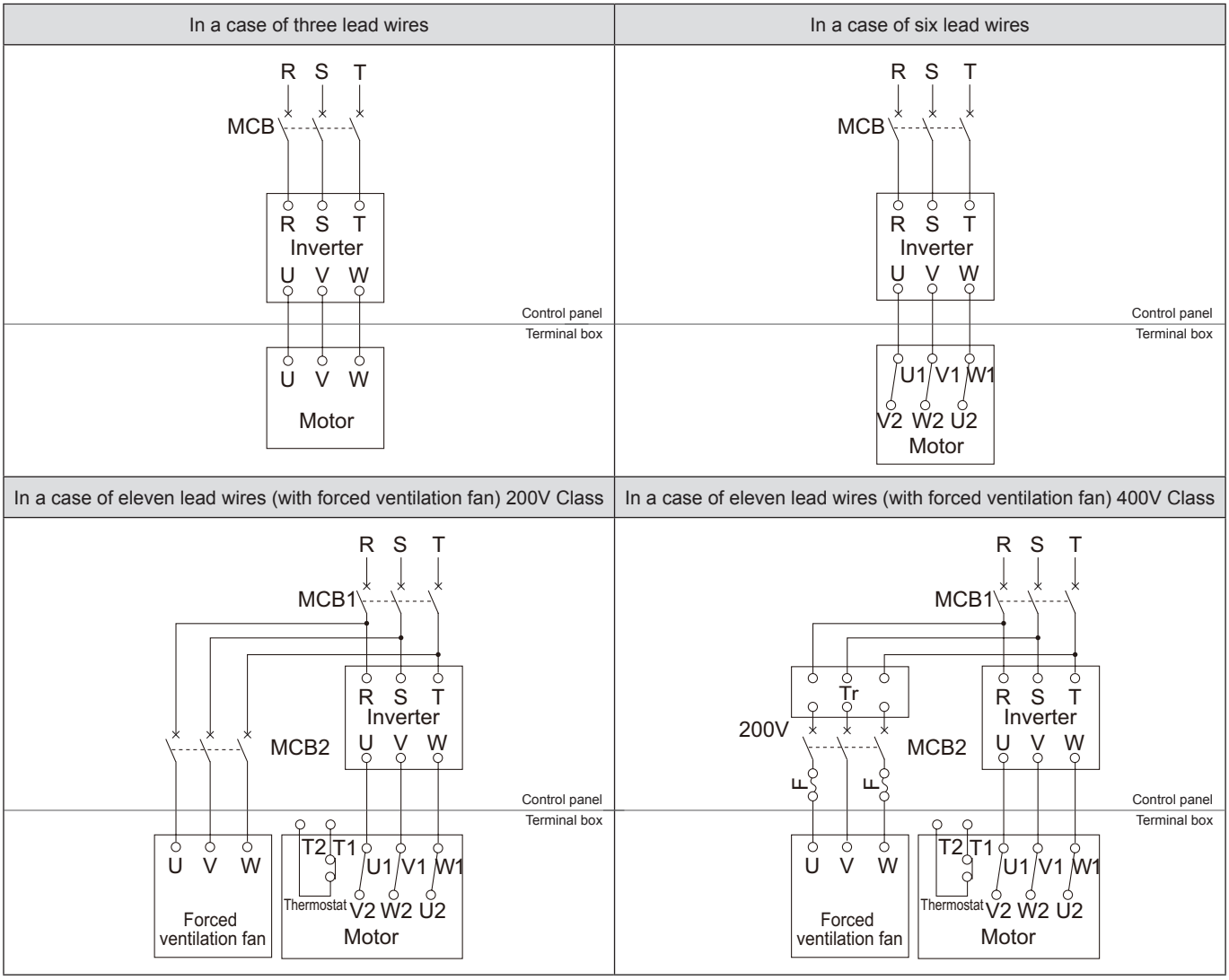

Note : This drawing shows for a motor based on standard specification for domestic market.
Motor based on overseas standard shall be referred to us.

MCB: Molded case circuit breaker
Tr: Transfomer capacity 250-600VA, secondary voltage 200-220V
F: Fuse 3-5A

These should be furnished by the customer.

- AF motor for inverter is designed for use with inverter.
  It uses star (wye)(⅄) connection for small capacity range and delta (Δ) connection for middle capacity range and larger.
  In addition, star (wye)-delta switch operation is possible using commercial power source.

- Insulation suitable for a motor is necessary in inverter drive with 3-phase 400V motor or 3-phase 400V high efficiency motor.

Note the following for forced ventilation types

- Connect power source for forced ventilation fan.
- Standard voltage of forced ventilation fan is 3-phase 200V class. Prepare a 400/200V transformer for 400V class power source.
- Wire so that the fan rotation direction is relevant with "rotation direction nameplate" when 3-phase motor is used for forced ventilation fan.
  (Wind should blow from the unconnected side to the connected side of the drive.)
- When you stop a motor for a long time, a forced ventilation fan should also stop.
- Wire the thermostat.
- Specification for thermostat
  Terminal symbol : T1 & T2 or P1 & P1
  Operating temperature : 135℃(Thermal class F)
  Operating function : Normal closed(contact point b)
  Maximum current : 18A for DC24V and 13A for AC230V

7. Operation

⚠ DANGER

- Do not touch rotating parts (output shaft, etc.) during operation; loose clothing may become caught in these rotating parts and cause serious injury or death.
- When the power supply is interrupted, be sure to turn off the power switch. Unexpected resumption of power may cause electric shock, personal injury or damage to the equipment.
- Do not operate the unit with the terminal box cover removed. Install the terminal box cover after maintenance, in order to prevent electric shock.
- Do not open the terminal box cover when power is supplied to an **explosion-proof type motor** ; otherwise explosion, ignition, electric shock, personal injury, fire or damage to the equipment may result.

⚠ CAUTION

- Do not put fingers or foreign objects into the opening of the drive unit or reducer; possible electric shock, personal injury, fire or damage to the equipment may result.
- Drive unit or reducer is very hot during operation. Touching the unit may result in burns.
- Do not remove the inspection cover during operation; otherwise, hot splashing lubricant may cause burns.
- To operate the unit in reverse, completely stop it once before starting it in reverse; otherwise, the unit may break.
- Do not loosen the oil filler plug during operation; otherwise, hot, splashing lubricant may cause burns.
- If a problem occurs during operation, stop operation immediately; otherwise, electric shock, personal injury or fire may result.
- Do not operate the unit in excess of the name plate rating; possible, personal injury or damage to the equipment may result.

- **Paramax drives** are shipped without oil. Units must be filled with the proper amount of recommended oil prior to start-up.

After the unit is installed, filled with oil and properly wired, check the following before operating:
(1) Is the wiring correct?
(2) Is the unit properly coupled with the driven machine?
(3) Are foundation bolts tightened to the proper torque value?
(4) Is the direction of rotation as required?
When all of the above questions are positive, conduct a trial run with light load. Move on to actual operation after confirming that are no abnormal sound, vibration, and temperature rise.
Check the items shown in Table 15.

Table 15 Items to Check During Initial Start-up and Break-in Period

Do you hear or feel abnormal sound or vibration ?	(1) Is the housing deformed because the installation surface is not flat? (2) Is insufficient rigidity of the installation base generating excessive noise? (3) Is the shaft center aligned with the driven machine? (4) Is the vibration of the driven machine transmitted to the gearmotor or reducer?
Is the surface temperature of the drive unit or reducer abnormally high?	(1) Is the voltage rise or drop substantial? (2) Is the ambient temperature too high? (3) Does the current flowing to **the motor** exceed the rated current shown on the rating plate? (4) Is the oil level specified level?

If any abnormalily is found, stop operation and contact our nearest agent, distributor, or sales office.

8. Daily Inspection and Maintenance

⚠ DANGER

- Do not handle the unit when connected to the power source. Be sure to turn off the power; possible, electric shock may occur.
- Do not touch any rotating parts (output shaft, etc) during maintenance or inspection of the unit; loose clothing may become caught in these rotating parts and cause serious injury or death.
- When shutdown inspection is conducted on the state of the tooth surface, be sure to provide rotation stoppers for the driving unit and driven unit; otherwise, loose clothing may become caught in the tooth engagement section and cause serious injury.
- Do not operate the unit with safety covers or other parts removed; loose clothing may become caught in these rotating parts and cause serious injury.
- Customers shall not disassemble or modify **explosion-proof type motors**; possible, explosion, ignition, electric shock or damage to the equipment may occur.
- The lead-in condition or an **explosion-proof type motors** shall conform to the facilities electrical codes, extension regulations and explosion-proofing guide, as well as the maintenance manual; possible, explosion, ignition, electric shock or damage to the equipment may occur.

⚠ CAUTION

- Do not put fingers or foreign objects into the opening of the drive unit or reducer; otherwise, electric shock, injury, fire, or damage to the equipment may occur.
- The drive unit or reducer is very hot during operation. Touching the unit with bare hands; may cause serious burns.
- Do not touch the terminal when measuring insulation resistance; otherwise, electric shock may occur.
- Do not operate the unit without a safety cover in place to shield rotating parts; otherwise, loose clothing may become caught in the unit and cause serious injury.
- Promptly identity and correct, according to instructions in this maintenance manual, any problems observed during operation. Do not operate until abnormality is corrected.
- Change lubricant according to the maintenance manual instructions. Be sure to use factory recommended lubricant.
- Do not change lubricant during operation or immediately after stopping operation; otherwise, burns may occur.
- Supply/discharge grease to/from the motor bearing according to the maintenance manual instructions. Avoid contact with rotating parts; otherwise, injury may occur.
- Do not remove the inspection cover during operation; otherwise, hot splashing lubricant may cause burns.
- Do not operate damaged Paramax drive or reducers; otherwise, injury, fire or damage to the equipment may occur.
- We do not assume any responsibility for damage or injury resulting from an unauthorized modification by the customer.
- Dispose drive unit, or reducer, and lubricant as general industrial waste.
- When measuring the insulation resistance of an **explosion-proof type motor**, confirm that there is no gas, steam or other explosive substance around the unit in order to prevent explosion or ignition.

8-1) Daily Inspection

To ensure proper and continued optimum operation, use Table 16 to perform daily inspections.

Table 16 Daily Inspection

Inspection Item		Details of Inspection
Electric current		Is the current below the rated current shown on the rating plate?
Noise		Is there abnormal sound ? Is there sudden change in sound?
Vibration		Is there excessive vibration ? Does vibration change suddenly?
Surface temperature		Is the surface temperature abnormally high (more than 90℃)? Does the surface temperature rise suddenly? [The temperature rise during operation differs according to the models. When the difference between the temperature of the gear surface and the ambient temperature is approx. 80℃, there will be no problem if there is no fluctuation.]
Oil level (**Oil-lubricated model**)	At rest	Does the oil level reach the top line of the oil gauge? (Check it with a dipstick or oil gauge while the machine is shut down.)
	When using the trochoid pump	Is the function of oil signal or flow gauge normal? When the function is abnormal, stop the unit and inspect it; otherwise, inadequate oil will cause poor lubrication of reduction portion, broken pump and fill-up the oil pipe.
Oil or grease leakage		Does oil or grease leak from the gear section?
Foundation bolt		Are foundation bolts loose?
Chain and V-belt		Are chain and V-belt loose?

When any problem is found during the daily inspection, take corrective measures listed in section 10. Troubleshooting (Page 29 and 30). If the problem cannot be corrected, contact our nearest agent, distributor, or sales office.

8-2) Confirmation of lubrication method

- Refer to the applicable items regarding maintenance. Unit lifetime may decrease without proper maintenance.

(1) Refer to Table 17 to confirm the gear lubrication method for your unit.
(2) Table 18 lists pages that can be referenced regarding lubrication maintenance.
(3) Refer to table 19 on Page 22 standard input speed.

Table 17 Lubrication method for respective gear types (For driving at standard input speed) Contact us when the input speed is different.

		Size	9015	9025	9030	9035	9040	9045	9050	9055	9060	9065	9070	9075	9080	9085
Right angle shaft	2-stage	Horizontal	Oil bath								Oil splash				*	*
		Vertical	Shaft driven oil pump													
		Upright	Oil bath + grease								Oil splash				*	*
	3-stage	Horizontal	-	-	Oil bath						Oil splash					
		Vertical	-	-	Shaft driven oil pump											
		Upright	-	-	Oil bath + grease						Oil splash					
	4-stage	Horizontal	-	-	-	-	Oil bath				Oil splash					
		Vertical	-	-	-	-	Shaft driven oil pump									
		Upright	-	-	-	-	Oil bath + grease				Oil splash					
Parallel shaft	2-stage	Horizontal	Oil bath								Oil splash					
		Vertical	Shaft driven oil pump													
		Upright	Oil bath								Oil splash					
	3-stage	Horizontal	Oil bath								Oil splash					
		Vertical	Shaft driven oil pump													
		Upright	Oil bath								Oil splash					
	4-stage	Horizontal	-	-	Oil bath						Oil splash					
		Vertical	-	-	Shaft driven oil pump											
		Upright	-	-	Oil bath						Oil splash					

		Size	9090	9095	9100	9105	9110	9115	9118	9121	9126	9128	9131	9136
Right angle shaft	2-stage	Horizontal	-	*	-	*	-	*	-	-	-	-	-	-
		Vertical	-	-	-	-	-	-	-	-	-	-	-	-
		Upright	-	-	-	-	-	-	-	-	-	-	-	-
	3-stage	Horizontal	Oil splash		*	*	*	*	*	*	*	*	*	*
		Vertical	Shaft driven oil pump		Electric pump				-	-	-	-	-	-
		Upright	-	-	-	-	-	-	-	-	-	-	-	-
	4-stage	Horizontal	Oil bath						Oil splash			*	*	*
		Vertical	Shaft driven oil pump						-	-	-	-	-	-
		Upright	-	-	-	-	-	-	-	-	-	-	-	-
Parallel shaft	2-stage	Horizontal	Oil splash		*	*	*	*	-	-	-	-	-	-
		Vertical	Electric pump						-	-	-	-	-	-
		Upright	-	-	-	-	-	-	-	-	-	-	-	-
	3-stage	Horizontal	Oil splash							-	-	-	-	-
		Vertical	Electric pump						-	-	-	-	-	-
		Upright	-	-	-	-	-	-	-	-	-	-	-	-
	4-stage	Horizontal	Oil splash											
		Vertical	Shaft driven oil pump				Electric pump		-	-	-	-	-	-
		Upright	-	-	-	-	-	-	-	-	-	-	-	-

*: For continuous operation, oil splash lubrication or electric pump lubrication is selected according to the input speed.

Table 18 Maintenance manual pages that can be referenced regarding lubrication maintenance

		Lubrication method	Supply of oil/grease before initial operation after purchase	Pages where maintenance method is shown				
				Oil/grease change period	Recommended oil/grease	Q'ty of oil/grease	Disposal of oil/grease	Parts
Gear	Oil	Oil bath	Self-lubrication	Necessary (Unnecessary for grease)	8-3) (1)-(2) Page 23	8-3) (3) Page 23	8-3) (5)-(6) Page 24	8-5) Page 27
		Oil bath + grease						
		Oil splash lubrication						
		Shaft driven pump lubrication						
		Electric pump lubrication	Forced lubrication					
Motor	Grease	—	Self-lubrication	Unnecessary	8-4) (1) Page 26	8-4) (2) Page 27	8-4) (3) Page 27	8-5) Page 27

Table 19 Standard speed table

Assembly			Size	Input speed r/min																						
				750						1000									1500							1800
Right angle shaft	2 stage	Horizontal	9015 - 9075																							
			9080 - 9085																							
			9095																							
			9105 - 9115																							
		Vertical	9015 - 9075																							
			9080 - 9085																							
		Upright	9015 - 9075																							
			9080 - 9085																							
	3 stage	Horizontal	9030 - 9095																							
			9100 - 9115																							
		Vertical	9030 - 9095																							
			9100 - 9115																							
		Upright	9030 - 9085																							
	4 stage	Horizontal	9040 - 9115																							
		Vertical	9040 - 9115																							
		Upright	9040 - 9085																							
Parallel shaft	2 stage	Horizontal	9015 - 9095																							
			9100 - 9105																							
			9110 - 9115																							
		Vertical	9015 - 9095																							
			9100 - 9105																							
			9110 - 9115																							
		Upright	9015 - 9085																							
	3 stage	Horizontal	9015 - 9115																							
		Vertical	9015 - 9115																							
		Upright	9015 - 9085																							
	4 stage	Horizontal	9030 - 9115																							
		Vertical	9030 - 9115																							
		Upright	9030 - 9085																							

Note 1. The ranges except shaded areas show the standard input speed.
2. Consult us for the ranges exceed the shading areas and the ranges in this table.
3. Consult us for standard input speed of reducer 9118-9136.

⚠CAUTION

- For equipment with motor oil pump, run the pump prior to starting the drive unit or reducer.
  Start motor of drive unit or reducer after lubricating oil has circulated through the bearings. Otherwise, the equipment may be damaged.

- Provide flow switch or flow sight to check the circulation of the lubricating oil. Stop the motor of drive unit or reducer when abnormality occurs.

8-3) Lubrication Maintenance

(1) Oil change interval

Table 20 Oil change interval

	Interval		Usage conditions
Oil filling	At purchasing		————
Oil change	1st time	Whichever comes sooner, after 500 hours or 6 months of operation	————
	2nd time	Whichever comes sooner, after 2,500 hours or 6 months of operation	————
	3rd time or later	Whichever comes sooner, every 5,000 hours or each year	When case oil temperature is lower than 70℃
		Whichever comes sooner, every 2,500 hours or 6 months of operation	When case oil temperature is 70℃ or higher

- Please consult lubricant supplier when atmosphere is contains corrosive gas or where ambient temperature changes dramatically.

(2) Grease interval

Table 21 Grease interval

Interval	Input speed
Every 1,500hrs	750 r/min or lower
Every 1,000hrs	750 to 1,800 r/min

- The grease lubricated models are packed with grease prior to shipment and attached grease nipple and grease discharge plug. Please check the number of grease nipples and their positions carefully.
- Please check Table 17 on Page 21 for unit requiring grease lubrication.
- Please see Fig.33 and 34 on Page 25 for positions of grease nipples and drain plugs.

(3) Selection of lubricant
Refer to Table 22 to select appropriate oil viscosity.
Table 23 shows recommended lubricants.

Table 22 Lubricant viscosity

Operation Condition / Application	Output Speed		Ambient Temperature ℃		
			-10 to 15	0 to 30	10 to 50
Continuous Operation	Over 100r/min	ISO* AGMA	VG68 2EP	VG150 4EP	VG220 5EP
	Under 100r/min	ISO* AGMA	VG100 3EP	VG220 5EP	VG320 6EP
Intermittent Operation (ex. Crane Drive)	All	ISO* AGMA	VG68 2EP	VG150 4EP	VG220 5EP

* Kinetic Viscosity (mm²/s) at ISO 40℃

Table 23 Recommended lubricants

	Brand	BP	CASTROL			CHEVRON TEXACO		EXXON MOBIL		SHELL	TOTAL
Gear Oil	ISO VG68 AGMA 2EP	ENERGOL GR-XP-68	ALPHA SP68	OPTIGEAR BM68	TRIBOL 1100/68	GEAR COMPOUNDS EP68	MEROPA WM68	SPARTAN EP68	MOBIL-GEAR 626	Shell Omala S2 G 68	CARTER EP68
	ISO VG100 AGMA 3EP	ENERGOL GR-XP-100	ALPHA SP100	OPTIGEAR BM100	TRIBOL 1100/100	GEAR COMPOUNDS EP100	MEROPA WM100	SPARTAN EP100	MOBIL-GEAR 627	Shell Omala S2 G 100	CARTER EP100
	ISO VG150 AGMA 4EP	ENERGOL GR-XP-150	ALPHA SP150	OPTIGEAR BM150	TRIBOL 1100/150	GEAR COMPOUNDS EP150	MEROPA WM150	SPARTAN EP150	MOBIL-GEAR 629	Shell Omala S2 G 150	CARTER EP150
	ISO VG220 AGMA 5EP	ENERGOL GR-XP-220	ALPHA SP220	OPTIGEAR BM220	TRIBOL 1100/220	GEAR COMPOUNDS EP220	MEROPA WM220	SPARTAN EP220	MOBIL-GEAR 630	Shell Omala S2 G 220	CARTER EP220
	ISO VG320 AGMA 6EP	ENERGOL GR-XP-320	ALPHA SP320	OPTIGEAR BM320	TRIBOL 1100/320	GEAR COMPOUNDS EP320	MEROPA WM320	SPARTAN EP320	MOBIL-GEAR 632	Shell Omala S2 G 320	CARTER EP320
Bearing grease		ENER-GREASE LS EP2	SPHEEROL AP3	Olista Long-time 3EP	TRIBOL 3020/1000-2	DURALITH GREASE 68	MULTI-FAK EP2	BEACON EP2	MOBIL-PLEX 48	Shell Gadus S2 V 220 2	MULTIS EP2

(4) Oil quantity

An estimated quantity of oil for standard specifications is shown in item 12. "oil quantity (Page 34)." The oil quantity shown in the catalog is not exact. Use a dipstick or visible oil gauge to check the oil level.

(5) Oil supply

Supply oil through the filling port on top of the main unit. Check the oil level with a dipstick or visible oil gauge (Fig.31).

Screw the dipstick to its deepest position to check the oil level; otherwise, the measured oil level will be incorrect (Fig.32).

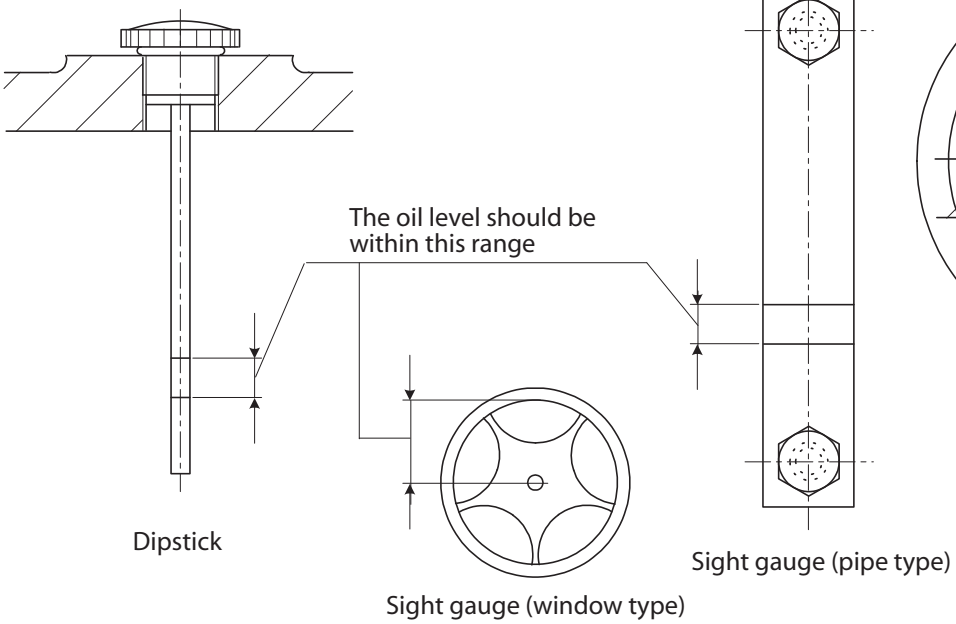

Fig.31

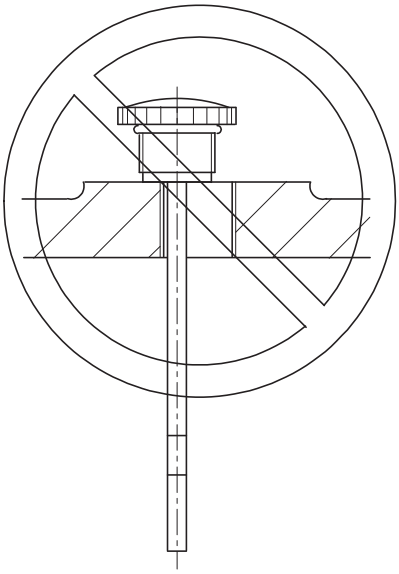

Fig.32

Care should be maintained during the oil-filling process to ensure that loose nuts, bolts, washers, dust, water and other such foreign material do not enter the unit.

If the oil level is lower than the range, the unit will not be lubricated.

If the oil level is higher than the range, deterioration of the oil is accelerated due to oil temperature rising.

Please remove drain plug located under the unit for oil draining when lubricating oil is still warm.

Removing the air breather makes draining and supplying oil easier.

(6) Supplying and draining grease

1. Some bearings need to be greased. Verify the number and locations of the grease fittings (Fig.33 and 34 on Page 25).
2. Grease is supplied before shipment. After the start of operation, supply the necessary amount of grease according to the following table depending on the input speed: every 1500 hours for 750 r/min or lower and at every 1000 hours for 750 r/min to 1800 r/min. Do not exceed the recommended amount of grease.

Table 24 Amount of grease

Unit: g

Size / Lubrication position	9015	9025	9030	9035	9040	9045	9050	9055	9060	9065	9070	9075	9080	9085	9090	9095	9100	9105	9110	9115
①	30	30	30	40	40	50	70	100	100	150	150	150	150	200	200	200	200	200	200	200
②	10	10	30	30	30	30	50	50	50	50	70	70	70	70	100	100	150	150	200	200
③	10	10	20	20	20	20	20	20	30	30	40	40	50	50	70	70	70	70	100	100
④	10	10	20	20	20	20	20	20	30	30	40	40	40	40	50	50	50	50	50	50
⑤	-	-	10	10	10	10	10	10	10	10	20	20	20	20	30	30	30	30	30	30
⑥	20	20	20	20	40	40	40	40	60	60	100	100	100	100	-	150	-	150	-	200
⑦	-	-	20	20	20	20	30	30	40	40	40	40	60	60	100	100	100	100	100	100
⑧	-	-	-	-	20	20	20	20	20	20	30	30	40	40	60	60	60	60	60	60

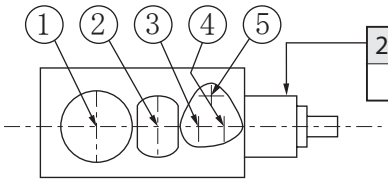

Right angle shaft

2 stage	3 stage	4 stage
⑥	⑦	⑧

- Supply grease during operation in order to apply the grease evenly.
- Supply the grease slowly.
- When new grease is supplied, the grease that was left over is mixed with the lubricant; the periodic replacement of lubricant does not affect the performance of lubricant.

(7) Positions of grease fitting and discharge plug

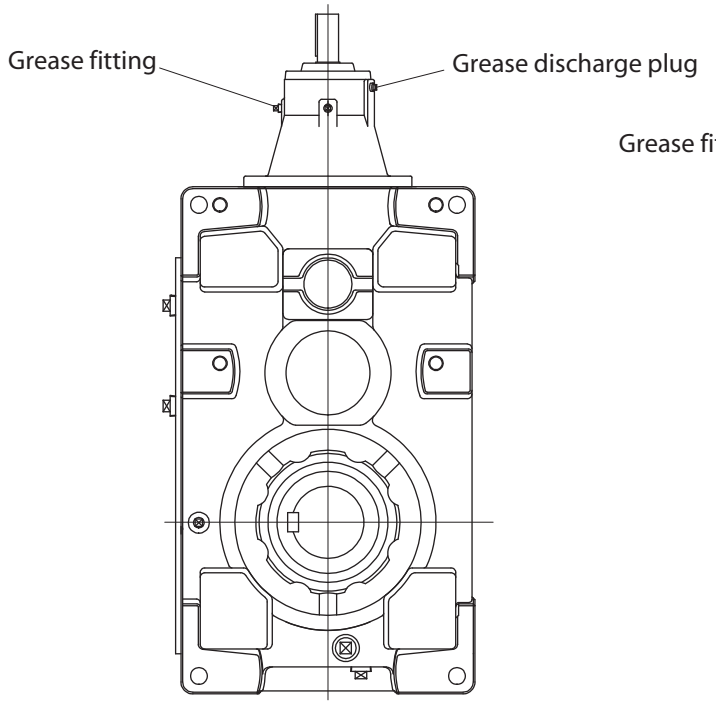

Fig.33 Reducer upright mount

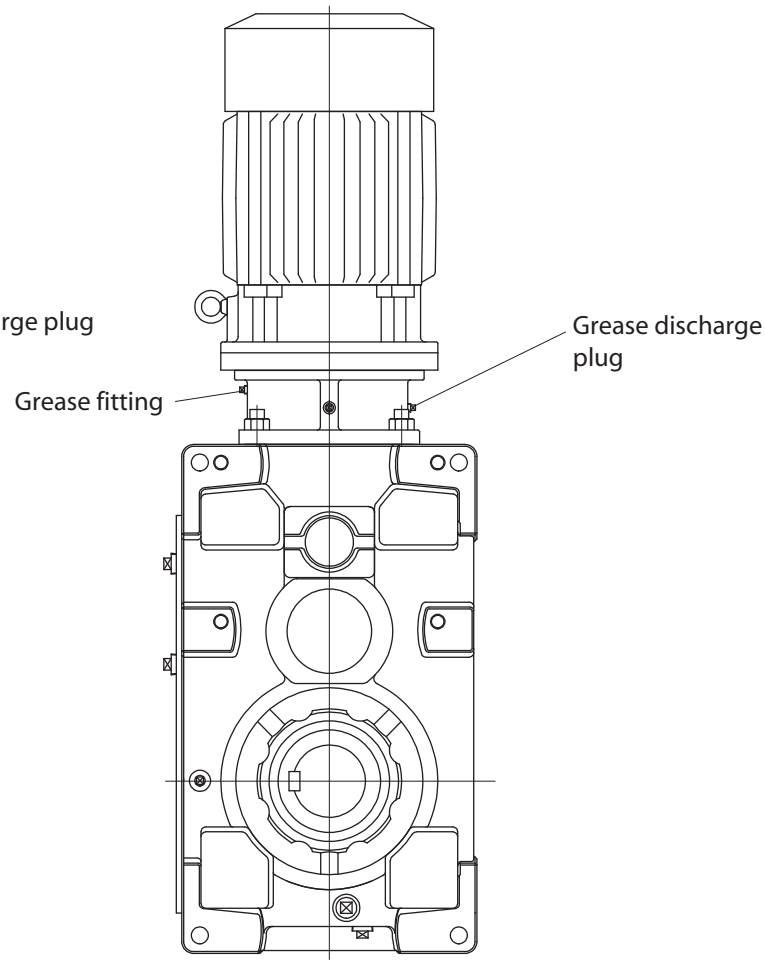

Fig.34 Drive unit upright mount

8-4) Maintenance of motor bearing

● Following instractions apply when using SUMITOMO standard 3-phase motor .
Refer to the relevant instruction manual when using motors with brake , servomotors and motors made by other companies .
Bearing types and maintenance methods vary according to the frame sizes of the unit.
Choose the proper maintenance method by checking the nameplate and the bearing type in Table 25.

Table 25 Bearing type

Bearing type	Applicable motor (frame size)		Remarks
	Loading side	Opposite of loading side	
Sealed bearing	225 or smaller	All	No construction for supplying and draining grease
Open bearing	250	———	With grease nipple and drain plug

Maintenance of sealed bearing

Since sealed-type bearing is filled with high quality grease from the factory, it is not necessary to replenish grease at the initial operation. Under normal operation, exchanging bearing once every three-five years or every 20,000 hrs at disassembly or maintenance is recommended for reliable operation.

- Use CM class bearings
- Use "MULTEMP SRL (Kyodo Yushi) lubricants"
- Under severe usage conditions, change bearing more frequently.
- When using forced ventilating motor, replacement of cooling fan every 15,000 hrs running is recommended because the bearing life of fan motor is 15,000 to 20,000 hrs.

Maintenance of open bearing

(1) Grease replenishing time and quantity
Checking the bearing number in the nameplate, replenish grease in according to Table 26.

Table 26 Grease maintenance schedule

Bearing No.	Dimension			Initial quantity (gram)	Replenishing quantity (gram)	Replenishing time (interval corresponding to rotation speed r/min)					
	Inner dia.	Outer dia.	Width			750r/min	900r/min	1000r/min	1200r/min	1500r/min	1800r/min
6314	70	150	35	200	40	8500	7000	6000	5000	3500	2500
6315	75	160	37	230	45	8500	6500	6000	4500	3500	2500
6316	80	170	39	260	50	8000	6500	5500	4500	3000	2500
6317	85	180	41	300	55	7500	6000	5000	4000	3000	2000
6318	90	190	43	350	60	7000	5500	5000	4000	2500	2000
6319	95	200	45	400	65	7000	5500	4500	3500	2500	1500
6320	100	215	47	450	70	6500	5000	4500	3500	2000	1500
6321	105	225	49	500	75	6000	5000	4000	3000	2000	1500
6322	110	240	50	550	80	6000	4500	4000	3000	2000	1000
6324	120	260	55	700	100	5500	4000	3500	2500	1500	1000
6412	60	150	35	200	40	8500	7000	6000	5000	3500	3000
6413	65	160	37	230	45	8000	6500	6000	4500	3500	2500
6414	70	180	42	300	55	8000	6500	5500	4500	3000	2500
NU314	70	150	35	120	40	4000	3500	3000	2500	1500	1000
NU315	75	160	37	150	45	4000	3000	3000	2000	1500	1000
NU316	80	170	39	200	50	4000	3000	2500	2000	1500	1000
NU317	85	180	41	250	55	3500	3000	2500	2000	1500	1000
NU318	90	190	43	300	60	3500	2500	2500	2000	1000	1000
NU319	95	200	45	350	65	3500	2500	2000	1500	1000	
NU320	100	215	47	400	70	3000	2500	2000	1500	1000	
NU321	105	225	49	450	75	3000	2500	2000	1500	1000	
NU322	110	240	50	500	80	3000	2000	2000	1500	1000	
NU324	120	260	55	650	100	2500	2000	1500	1000		

- Initial quantity shows replenished quantity after disassembling and cleaning the bearings. Supply about 1/3 of the quantity to inside of the bearing and the rest of it to inner space.
- Replenishing quantity indicates grease amount poured into the bearing every interval.
- Even though the bearing is run with intermittent operation, replenish grease at least every three years.
- Replenish grease right after starting operation after a long shut down.

(2) Recommended grease

Table 27 Recommended grease

Ambient temperature °C	Open bearing
	Tharmal Class F
	Shell oil
-10 to 40	Shell Stamina Grease RL2

- Use only greases listed in table 27.

(3) Grease maintenance procedure (refer to Fig.35 and Fig.41 on page 33)
1. Drain used grease from drain plug and replenish new grease from grease nipple during operation. (Replenishing during non-operation may cause insufficient replenishing amount of grease)
2. After supplying grease, operate it for 10 min and then tighten the plug of drain port.

- Fill with indicated amount of grease only; otherwise, over heating and grease leakage may result.
- Exceeding the recommended amount of grease does not extend the replenishment interval.
- Do not forget to replenish at start-up and periodically during operation; otherwise, abnormal abrasion, noise and overheating may result.

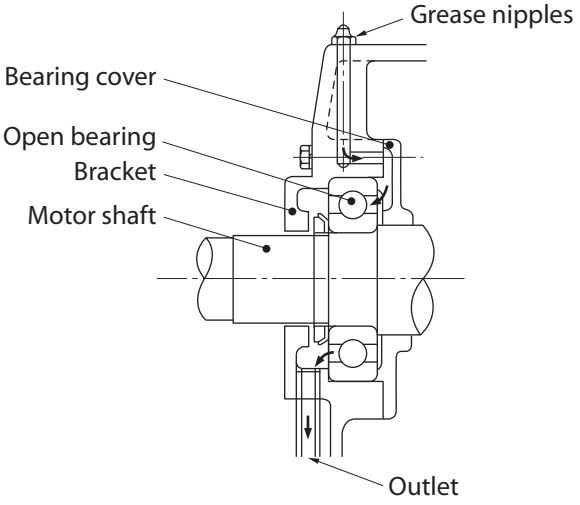

Fig.35 Construction of open bearing

8-5) Parts Maintenance

To increase operational life, replace the items below every 3 to 5 years.

Exchange parts
- Bearing, oil seal, nilos, collar, key, shim, packing, stopper, and visible gauge.
- Check and replace shaft and gear if there are damaged.

Paramax reducer should be returned to the factory to exchange the parts. Please inform the model, ratio, serial number, and quantity.

9. Disassembly / reassembly

⚠CAUTION

- Repair, disassembly, and reassembly should be handled by properly technicians; otherwise, the system may be damaged.

- Keep hands and all foreign objects from keyway and other sharp edges of parts; otherwise, injury may occur.
- Disassemble them at a clean, dry location.
- Keep accessory parts like screws in the box to prevent loss.
- Carefully handle parts to prevent damage.

9-1) Disassembling / assembling of gear and motor

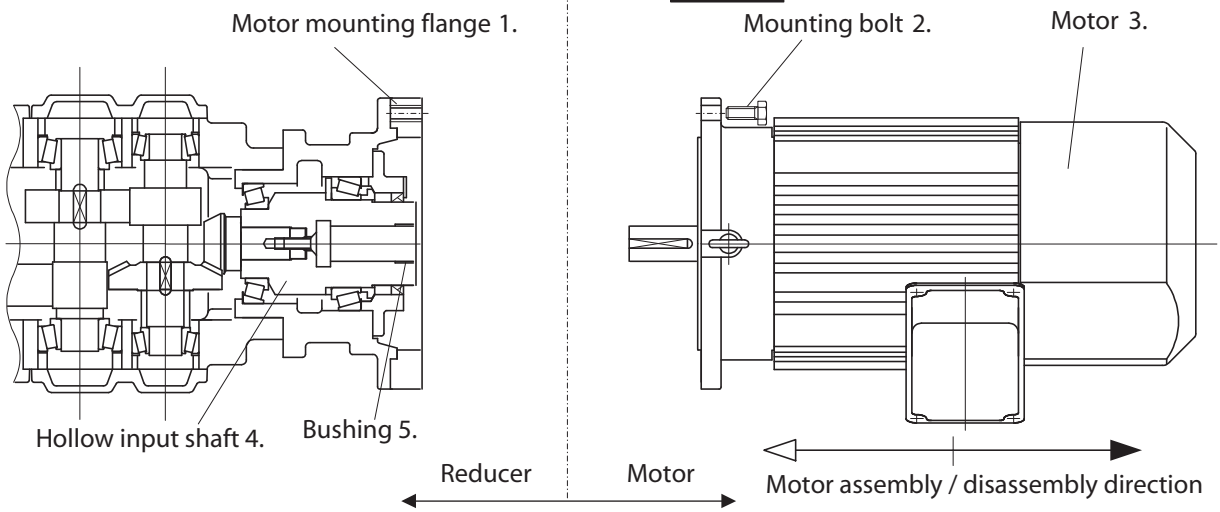

Fig.36

Disassembling procedure

(1) Remove mounting bolts 2. .
(2) Separate motor 3. from gear reducer.
Carefully handle them not to touch the edge of key and the output shaft end of bushing 5. and motor3. ; otherwise, coating of bushing5. may be come off.

Assembling procedure

(1) Install gear part to where motor 3. would be easily mounted.
(2) Carefully slide motor 3. into position in the gear reducer.
(3) Adjust phases of motor 3. 's output shaft key and of hollow input shaft 4. 's keyway.
(4) Apply grease t output shaft of motor 3. and insert it into hollow input shaft 4. slowly.
Carefully handle them not to touch the edge of key and the output shaft end of bushing5. and motor3. ; otherwise, coating of bushing5. may be come off.
(5) Check whether motor3. is properly inserted and tighten installation bolt 2. to fix motor 3. with flange for motor.

9-2) Disassembling / Assembling of motor

Please pay particular attention to followings when motor's disassembled or assembled.

(1) Carefully handle bearing and winding not to be adhered with dust and liquid.
(2) Apply a little bit amount of adhesive to outer diameter of bearing in the case of overloading usage such as large loading fluctuations and vibration (Recommended adhesive: Locktite 242 or 271).
(3) After removing old non-drying liquid gasket, apply new one.
(4) Make sure that there are no abnormalities by rotating with hands befoer the trial run.

10. Troubleshooting

⚠ CAUTION

- Identify and provide appropriate corrective action in a timely fashion for any abnormal operation characteristics accroding as the maintenance manual. Do not operate the unit until corrective action has been taken.

When abnormal conditions are encountered, take appropriate measures immediately referring to the following table. If they are not repairable, consult agencies, sales office, or office of Sumitomo Drive Techonologies.

Table 28 Troubleshooting

Details of trouble			Cause	Correction
The motor will not operate under no load.			Power failure	Contact the electric power company.
			Defective electric circuit	Check the circuit.
			Blown fuse	Replace the fuse.
			Protective device is engaged.	Fix the problem and recover.
			Load locking	Check the load and safety device.
			Poor switch contact	Adjust the contact area.
			Disconnection of motor stator coil	Return the unit to factory for servicing.
			Bearing is broken.	Replace the bearing.
			3-phase is functioning as single-phase.	Check the power supply with a voltmeter. Check the motor, coil in the transformer, contactor, fuse, etc. and repair or replace them.
The motor runs without a load, but the output shaft does not rotate.			Damage due to overloading of the gears and shafts.	Return the unit to factory for servicing.
The output shaft turns without a load	When a load is applied	The switch is heated.	Insufficient capacity of switch	Replace with specified switch.
			Overload	Decrease the load to the specified value.
		Fuse tripping	Insufficient capacity of fuse	Replace with specified fuse.
			Overload	Decrease the load to the specified value.
		The speed will not increase and the motor is overheating.	Voltage drop	Contact the electric power company.
			Overload	Decrease the load to the specified value.
			Short-circuited motor stator coil	Return the unit to factory for servicing.
		The motor stops.	The key is missing.	Install a key.
			The bearing is burned.	Replace the bearing.
			Poor adjustment of protective device	Adjust the protective device.
	The motor runs in the reverse direction.		Connection error	Change the connection.
	Fuse tripping		The outlet wire is short-circuited.	Return the unit to factory for servicing.
			Poor contact between motor and starter	Complete the connection.
Excessive temperature rise			Overload	Decrease the load to the specified value.
			Voltage drop or rise	Contact the electric power company.
			Scorched bearing	Return the unit to factory for servicing.
			The ambient temperature is high.	Improve the ventilation method.
			Damage due to overloading of gears and bearings	Return the unit to factory for servicing.
Oil leakage	Oil leaks from the input/output shaft sections.		Damaged oil seal	Change the oil seal.
			Scratches or abrasion of the lip contact section	Return the unit to factory for servicing.
	Oil leaks from the joint surface of the housing.		Loose tightening bolt	Tighten the tightening bolts to their proper torque.
	Leakage of oil/grease into motor		Damaged oil seal	Change the oil seal.
			Excessive oil/grease supply	Remove excess oil/grease.

Table 29 Troubleshooting

Details of trouble		Cause	Correction
Abnormal sound Excessively high vibration		Damaged gears, shafts, or bearings	Return the unit to factory for servicing.
		Deformation of the housing due to uneven installation surface	Flatten the installation surface or use liners for adjustment.
		Resonance due to insufficient rigidity of installation base	Reinforce the installation base to improve the rigidity.
		Incorrect alignment with the mating machine	Align the shaft center.
		Transmission of the mating machine's vibration to the reducer	Independently operate the reducer to check the source of abnormal sound.
Abnormal sound from motor		Entry of foreign matter	Remove the foreign matter.
		Damaged bearings	Replace the bearing.
Inverter tripping	Shut-off due to overcurrent	Sudden acceleration / deceleration	Increase the acceleration/deceleration time.
		Sudden change in load	Decrease the load change.
	Grounding overcurrent	Grounding on the output side	Make correction to eliminate grounding.
	DC overcurrent	Short-circuiting on the output side	Make correction to eliminate short-circuiting. Check cables.
	Shut-off due to regenerative overvoltage	Sudden deceleration	Increase the deceleration time. Reduce the braking frequency.
	Thermal relay operation	Overloading	Decrease the load to the specified value.

11. Construction drawing

11-1) Drive unit construction

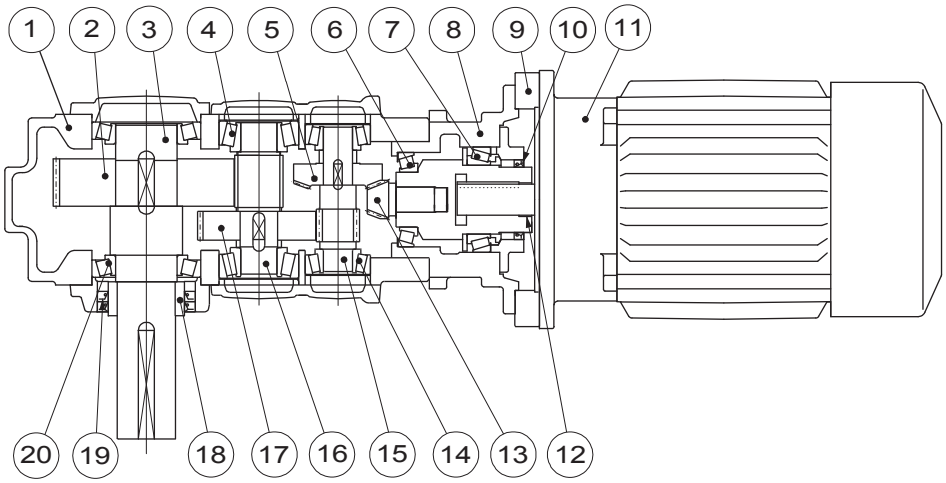

Fig. 37 Right angle shaft drive unit construction

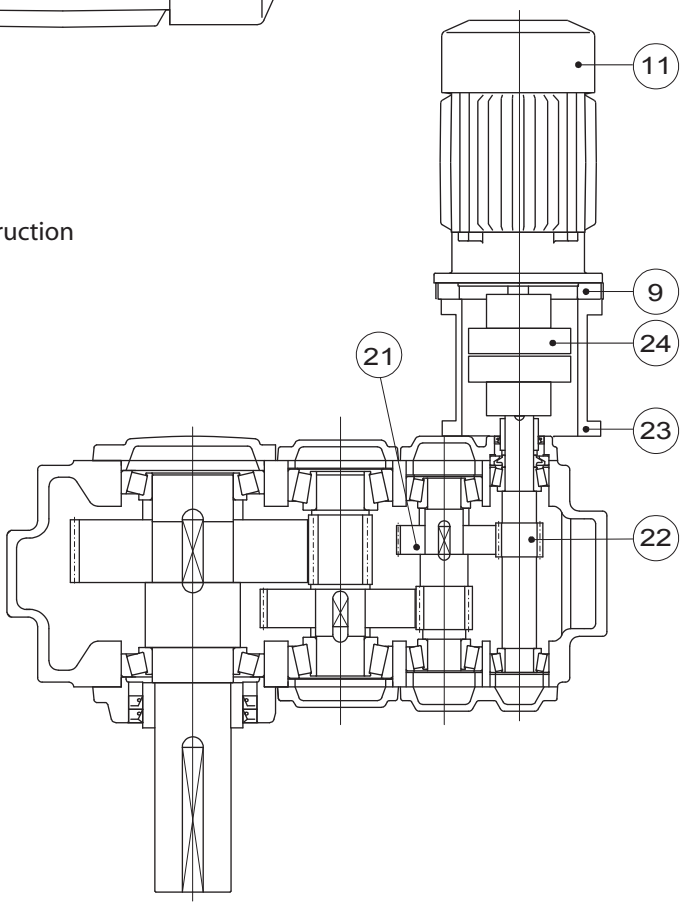

Fig. 38 Parallel shaft drive unit construction

Table 30 Parts list

Ref. No.	Part name	Ref. No.	Part name	Ref. No.	Part name
1	Housing	9	Motor mounting flange	17	Helical gear
2	Helical gear	10	Oil seal	18	Collar
3	Slow speed shaft	11	Motor	19	Oil seal
4	Taper roller bearing	12	Bushing	20	Tapar roller bearing
5	Bevel gear	13	Bevel pinion shaft	21	Helical gear
6	Taper roller bearing	14	Taper roller bearing	22	Helical pinion shaft
7	Taper roller bearing	15	Helical pinion shaft	23	Motor adaptor
8	Bearing housing	16	Helical pinion shaft	24	Coupling

11-2) Reducer construction

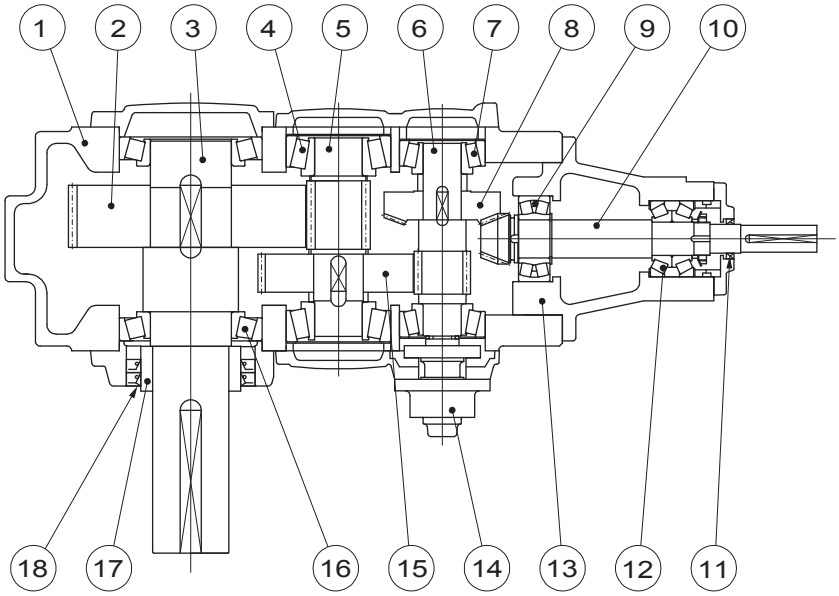

Fig. 39 Right angle shaft reducer construction

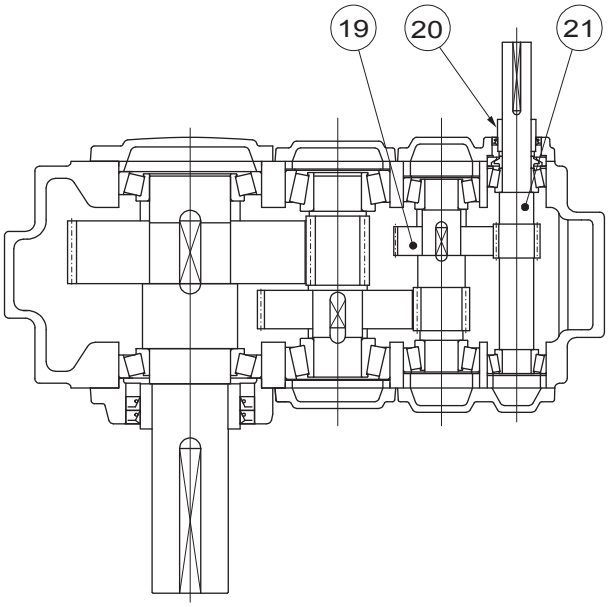

Fig. 40 Parallel shaft reducer construction

Table 31 Parts list

Ref. No.	Part name	Ref. No.	Part name	Ref. No.	Part name
1	Housing	9	Spherical roller bearing	17	Collar
2	Helical gear	10	Bevel pinion shaft	18	Oil seal
3	Slow speed shaft	11	Oil seal	19	Helical gear
4	Taper roller bearing	12	Taper roller bearing	20	Collar
5	Helical pinion shaft	13	Bearing housing	21	Helical pinion shaft
6	Helical pinion shaft	14	Oil pump		
7	Taper roller bearing	15	Helical gear		
8	Bevel gear	16	Taper roller bearing		

11-3) Construction drawing of motor

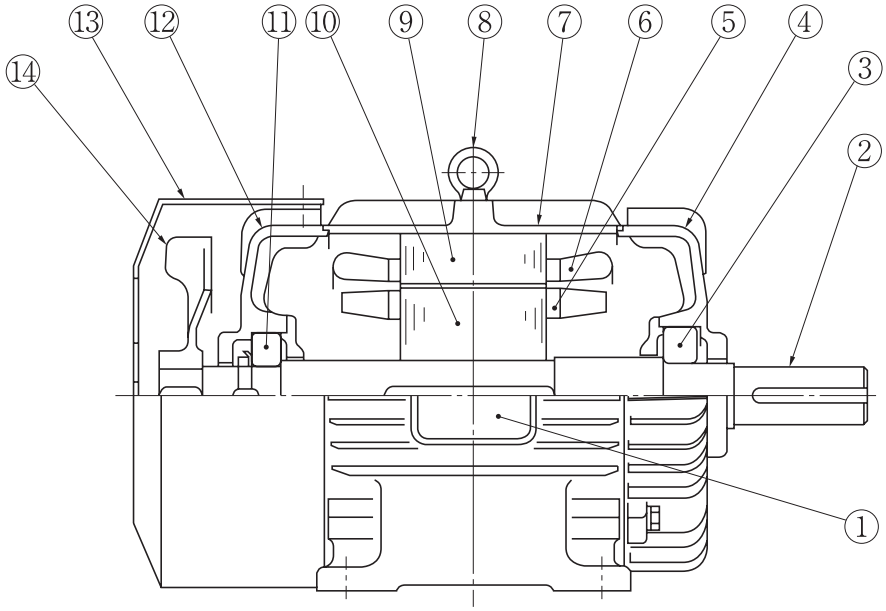

Fig. 41 Construction of totally enclosed fan cooled squirrel-cage motor

Table 32 Parts list

Ref.No.	Part name	Ref.No.	Part name	Ref.No.	Part name
1	Conduit box	6	Stator winding	11	Bearing outboard
2	Motor shaft	7	Stator frame	12	Bracket outboard
3	Bearing inboard	8	Eyebolt	13	Fan cover
4	Bracket inboard	9	Stationary core	14	Fan
5	Rotor conductor short circuit ring	10	Rotor core		

12. Oil quantity

Table 33 Oil quantity

Unit: Liter

Size	Horizontal type						Vertical type						Upright type					
	Right angle shaft			Parallel shaft			Right angle shaft			Parallel shaft			Right angle shaft			Parallel shaft		
	2-stage	3-stage	4-stage	2-stage	3-stage	4-stage	2-stage	3-stage	4-stage	2-stage	3-stage	4-stage	2-stage	3-stage	4-stage	2-stage	3-stage	4-stage
9015	5	-	-	5	5	-	5	-	-	5	6	-	7	-	-	9	11	-
9025	7	-	-	7	8	-	7	-	-	7	8	-	11	-	-	13	15	-
9030	10	10	-	10	10	14	7	9	-	9	10	10	14	16	-	16	20	20
9035	12	12	-	12	13	17	9	12	-	12	14	14	19	21	-	22	25	25
9040	16	16	19	16	19	25	19	18	18	18	18	17	24	29	35	29	35	35
9045	18	18	21	18	21	28	23	22	22	22	22	21	30	36	43	36	43	43
9050	21	21	24	21	24	32	20	21	24	22	25	23	31	35	46	36	45	46
9055	28	28	29	28	29	40	26	30	34	31	35	33	45	46	59	47	59	59
9060	25	29	38	25	33	37	*	28	36	25	28	32	44	56	68	53	68	69
9065	34	33	43	34	38	42	*	35	45	32	35	40	56	65	85	67	85	86
9070	37	45	57	38	49	56	*	46	54	39	44	53	65	83	107	84	106	108
9075	46	52	67	47	59	67	*	59	68	49	56	67	87	100	122	100	120	122
9080	53	60	73	54	64	73	*	60	69	54	57	65	90	115	128	109	130	130
9085	67	75	90	68	80	90	*	80	94	71	79	89	126	144	174	137	176	175
9090	-	120	150	120	120	150	-	120	120	90	90	110	-	-	-	-	-	-
9095	100	155	180	140	155	180	-	145	155	120	120	140	-	-	-	-	-	-
9100	-	180	210	170	180	220	-	170	180	140	140	170	-	-	-	-	-	-
9105	150	220	255	205	225	260	-	210	220	175	175	210	-	-	-	-	-	-
9110	-	250	300	240	260	300	-	230	250	200	200	240	-	-	-	-	-	-
9115	200	310	360	290	325	365	-	290	315	255	255	295	-	-	-	-	-	-
9118	-	350	390	-	350	390	-	-	-	-	-	-	-	-	-	-	-	-
9121	-	460	540	-	470	530	-	-	-	-	-	-	-	-	-	-	-	-
9126	-	460	530	-	470	520	-	-	-	-	-	-	-	-	-	-	-	-
9128	-	350	460	-	390	450	-	-	-	-	-	-	-	-	-	-	-	-
9131	-	510	680	-	550	650	-	-	-	-	-	-	-	-	-	-	-	-
9136	-	500	660	-	540	640	-	-	-	-	-	-	-	-	-	-	-	-

*: Refer to the Table 34.

Table 34 Right angle shaft 2 stage oil quantity

Unit: Liter

Size	Reduction ratio		Reduction ratio	
	6.3-9	10-18	8-11.2	12.5-22.4
9060	25	25	-	-
9065	-	-	32	32
9070	35	41	-	-
9075	-	-	47	54
9080	46	55	-	-
9085	-	-	58	68

13. Oil fill and drain plug locations

13-1) Horizontal

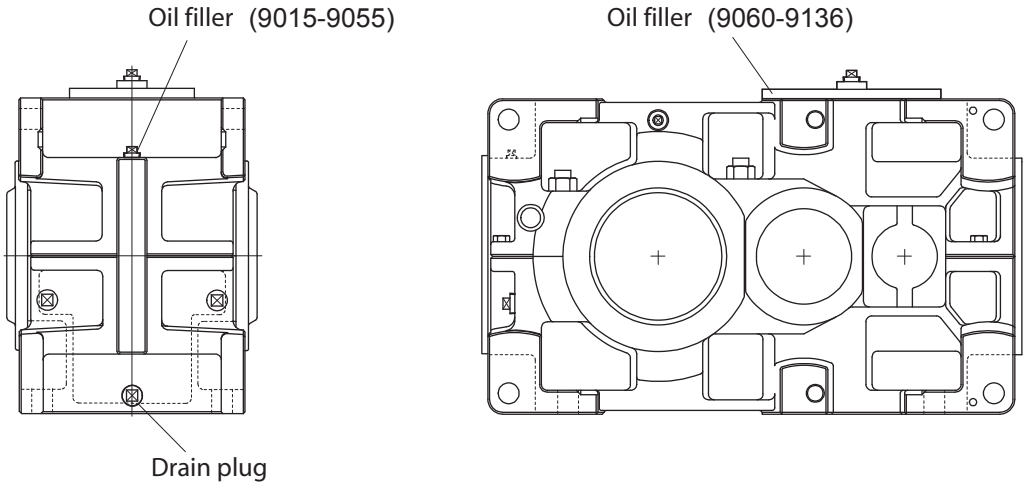

Fig. 42

13-2) Vertical

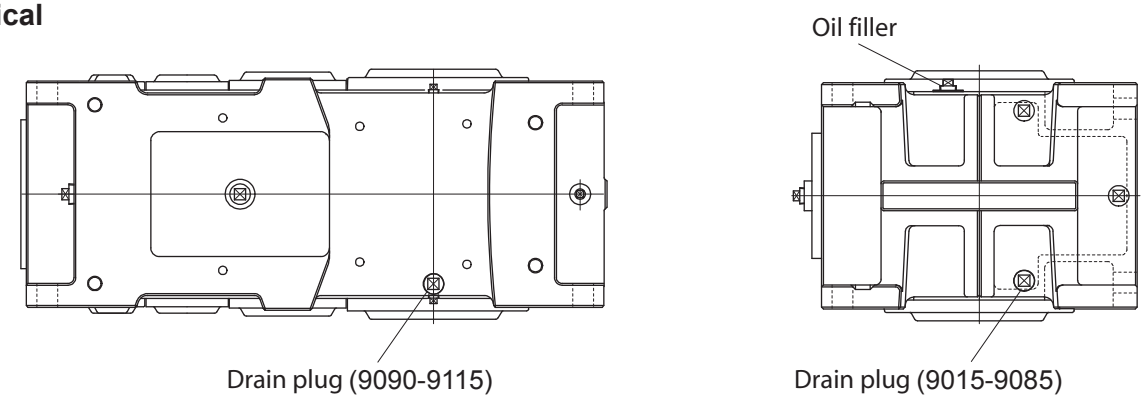

Fig. 43

13-3) Upright

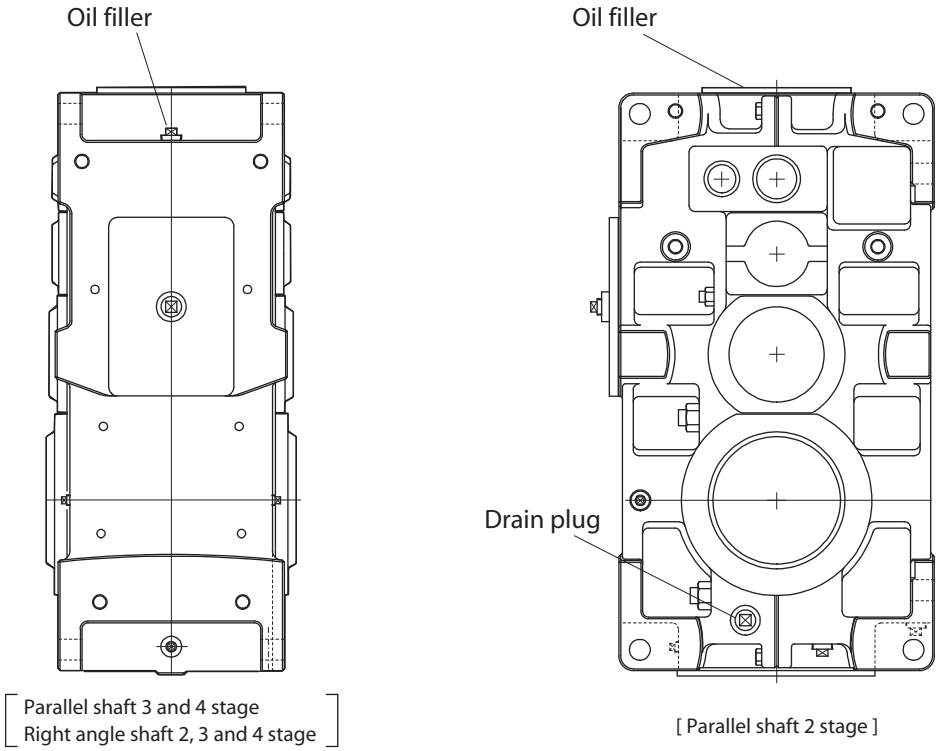

Fig. 44

14. Warranty

Our product warranty is limited to our products.
Warranty (Period and contents)

Warranty Period	The warranty period for the Products shall be 18 months after the commencement of delivery or 18 months after the shipment of the Products from the seller's works or 12 months from the Products coming into operation, which ever comes first.
Warranty Condition	In case that any problems, troubles or damages on the Products arise due to the defects in the Products during the above "Warranty Period," although the Products are appropriately and properly installed in, connected or combined to the equipment or machines, or maintained in accordance with the maintenance manual and are properly operated under the conditions as described in the catalogue or otherwise as agreed upon in writing between the Seller and the Buyer or its customers, the Seller will provide, at its sole discretion, appropriate repair or replacement on the Products free of charge, except as stipulated in the "Exception for Warranty" as described below. However, in the event that the Products is installed in, connected or combined to or integrated into the equipment or machines, the Seller shall not reimburse the costs for removal or re-installation of the Products or other incidental costs related thereto and any lost opportunity, loss of profit or any other incidental or consequential losses or damages incurred by the Buyer or its customers.
Warranty Exclusions	Notwithstanding the above warranty, the warranty as set forth herein shall not be applied to the problems, troubles or damages on the Products which are caused by; 1. installations, connections, combinations or integration of the Products in or to the other equipment or machines, which are rendered by any person or entity other than the Seller, 2. the insufficient maintenance or improper operation by the Buyer or its customers, such that the Product is not appropriately maintained in accordance with the maintenance manual provided or designated by the Seller, 3. the improper use or operation of the Products by the Buyer or its customers which are not informed to the Seller, including, without limitation, the Buyer's or its customers' operation of the Products not in conformity with the specifications, or use of the lubrication oil in the Products which is not recommended by the Seller, 4. troubles, problems or damages on any equipment or machines in or to which the products are installed, connected or combined or installed or any specifications particular to the Buyer or its customers, or 5. any changes, modifications, improvements or alternations on the Products or those functions which are rendered on the Products by any person or entity other than the Seller, 6. any parts in the Products which are supplied or designated by the Buyer or its customers, 7. earthquake, fire, flood, sea-breeze, gas, thunder, acts of God or any other reasons beyond the control of the Seller, 8. waste, exhaustion, normal tear or ware, or deterioration on the parts of the Products, such as bearing, oil-seal, 9. any other troubles, problems or damage to the Product that are not attributable to the Seller.

Worldwide Locations

U.S.A

Sumitomo Machinery Corporation of America (SMA)
4200 Holland Blvd. Chesapeake,VA 23323,U.S.A.
TEL (1)757-485-3355 FAX (1)757-485-7490

Canada

SM Cyclo of Canada, Ltd. (SMC)
1453 Cornwall Road,Oakville, Canada ON L6J 7T5
TEL (1)905-469-1050 FAX (1)905-469-1055

Mexico

SM Cyclo de Mexico, S.A. de C.V. (SMME)
Av. Desarrollo 541, Col. Finsa, Guadalupe,
Nuevo León, México, CP67132
TEL (52)81-8144-5130 FAX (52)81-8144-5130

Brazil

Sumitomo Industrias Pesadas do Brasil Ltda. (SHIB)
Rodovia do Acucar (SP-075) Km 26
Itu, Sao Paulo, Brasil
TEL (55)11-4886-1000 FAX (55)11-4886-1000

Chile

SM Cyclo de Chile, Ltda. (SMCH)
San Pablo 3507, Quinta Normal, Santiago, Chile
TEL (56)2-892-7000 FAX (56)2-892-7001

Argentina

SM Cyclo de Argentina S.A. (SMAR)
Ing. Delpini, 2236Area de Promocion el Triangulo,
Partido Malvinas Argentinas Grand Bourg,
Buenos Aires, Argentina B1615KGB
TEL (54)3327-45-4095 FAX (54)3327-45-4099

Guatemala

SM Cyclo de Guatemala Ensambladora, Ltda. (SMGT)
Parque Industrial Unisur, 0 Calle B 19-50 Zona 3,
Bodega D-1 Delta Bárcenas en Villa Nueva, Guatemala
TEL (502)6648-0500 FAX (502)6631-9171

Colombia

SM Cyclo Colombia, S.A.S.
Carrera 11, No.93A-53, Office 203, Bogotá, Colombia
TEL (57)1-3000673

Germany

Sumitomo (SHI) Cyclo Drive Germany GmbH (SCG)
Cyclostraße 92, 85229 Markt Indersdorf, Germany
TEL (49)8136-66-0 FAX (49)8136-5771

Austria

Sumitomo (SHI) Cyclo Drive Germany GmbH (SCG)
SCG Branch Austria Office
Gruentalerstraße 30A, 4020 Linz, Austria
TEL (43)732-330958 FAX (43)732-331978

Belgium

Sumitomo (SHI) Cyclo Drive Germany GmbH (SCG)
SCG Branch Benelux Office
Heikneuterlaan 23, 3010 Kessel-Lo, Leuven, Belgium
TEL (32)16-60-83-11 FAX (32)16-60-16-39

France

SM-Cyclo France SAS (SMFR)
8 Avenue Christian Doppler, 77700 Serris, France
TEL (33)164171717 FAX (33)164171718

Italy

SM-Cyclo Italy Srl (SMIT)
Via dell' Artigianato 23, 20010 Cornaredo (MI), Italy
TEL (39)293-481101 FAX (39)293-481103

Spain

SM-Cyclo Iberia, S.L.U. (SMIB)
C/Landabarri No. 3, 6° B, 48940 Leioa, Vizcaya, Spain
TEL (34)9448-05389 FAX (34)9448-01550

Sweden

SM-Cyclo Scandinavia AB (SMSC)
Industrigatan 21B, 234 35 Lomma, Sweden
TEL (46)40220030

United Kingdom

SM-Cyclo UK Ltd. (SMUK)
Unit 29, Bergen Way, Sutton Fields Industrial Estate,
Kingston upon Hull, HU7 0YQ, East Yorkshire,
United Kingdom
TEL (44)1482-790340 FAX (44)1482-790321

Turkey

SM Cyclo Turkey Güç Aktarım Sis. Tic. Ltd. Sti. (SMTR)
Büyükdere Çayırbaşı Cd. Dede Yusuf Sk. No:11,
34453 Sarıyer Istanbul, Turkey
TEL (90)216-384-4482 FAX (90)216-384-4482

China

Sumitomo (SHI) Cyclo Drive China, Ltd. (SCT)
11F,SMEG Plaza, No.1386 Hongqiao Road,
Changning District, Shanghai, China (P.C.200336)
TEL (86)21-3462-7877 FAX (86)21-3462-7922

Hong Kong

SM-Cyclo of Hong Kong Co.,Ltd. (SMHK)
Rm 1301, CEO Tower, 77 Wing Hong Street,
Cheung Sha Wan, Kowloon, Hong Kong
TEL (852)2460-1881 FAX (852)2460-1882

Korea

Sumitomo (SHI) Cyclo Drive Korea, Ltd. (SCK)
Royal Bldg. 9F Rm.913, 5 Danju-Dong, Chongro-Ku,
Seoul, Korea 110-721
TEL (82)2-730-0151 FAX (82)2-730-0156

Taiwan

Tatung SM-Cyclo Co., Ltd. (TSC)
22 Chungshan N. Road 3rd., Sec. Taipei, Taiwan 104,
R.O.C.
TEL (886)2-2595-7275 FAX (886)2-2595-5594

Singapore

Sumitomo (SHI) Cyclo Drive Asia Pacific Pte. Ltd. (SCA)
15 Kwong Min Road, Singapore 628718
TEL (65)6591-7800 FAX (65)6863-4238

Philippines

Sumitomo (SHI) Cyclo Drive Asia Pacific Pte. Ltd. (SCA)
Philippines Branch Office
B2B Granville Industrial Complex, Carmona, Cavite,
Philippines
TEL (63)2-584-4921 FAX (63)2-584-4922
TEL (63)46-430-3591
TEL (63)46-482-0580
TEL (63)46-482-0581

Vietnam

SM-Cyclo (Vietnam) Co., Ltd.
Factory 2B, Lot K1-2-5,Road No.: 2-3-5A,
Le Minh Xuan Industrial Park, Binh Chanh Dist.,
HCMC, Vietnam.
TEL (84)8-37-663-709 FAX (84)8-37-663-710

Malaysia

SM-Cyclo of Malaysia Sdn. Bhd. (SMMA)
No.7C, Jalan Anggerik Mokara 31/56, Kota Kemuning,
Seksyen 31, 40460 Shah Alam, Selangor D.E., Malaysia
TEL (60)3-51210455 FAX (60)3-51210578

Indonesia

PT. SM-Cyclo Indonesia
Jalan Sungkai Blok F 25 No. 09K, Delta Silicon 5,
Lippo Cikarang, Bekasi 17530, Indonesia
TEL (62)21-2961-2100 FAX (62)21-2961-2211

Thailand

SM-Cyclo (Thailand) Co., Ltd.
195 Empire Tower, 21st Fl., Unit 2103-4, South Sathorn Rd.,
Yannawa Sathorn, Bangkok 10120, Thailand
TEL (66)2-670-0998 FAX (66)2-670-0999

Australia

Sumitomo (SHI) Hansen Australia Pty. Ltd. (SHAU)
181 Power Street Glendenning NSW 2761, Australia
TEL (61)2-9208-3000 FAX (61)2-9208-3050

India

Sumi-Cyclo Drive India Pvt. Ltd. (SMIN)
Survey No.130, Hissa No.02, Jeevan Nagar, Off Mumbai-Bangalore bypass, Tathawade, Pune-411 033, India
TEL (91)20-6674-2900 FAX (91)20-6674-2901

Japan

Sumitomo Heavy Industries, Ltd.
ThinkPark Tower, 1-1 Osaki 2-chome, Shinagawa-ku,
Tokyo 141-6025, Japan
TEL (81)3-6737-2511 FAX (81)3-6866-5160

Specifications, dimensions, and other items are subject to change without prior notice.

Sumitomo Heavy Industries, Ltd.

Power Transmission & Controls Group

Headquarter ThinkPark Tower, 1-1 Osaki 2-chome, Shinagawa-ku, Tokyo 141-6025, Japan

No.GM2002E-6.15

EA02 Printed 2015.05